TRAFFIC ANALYSIS & DESIGN, INC.

N36 W7505 Buchanan Court
Cedarburg, WI 53012
800.605.3091
www.tadi-us.com

Chapman Property Development Traffic Impact Study

Village of Mukwonago
Waukesha County, Wisconsin
December 11, 2015

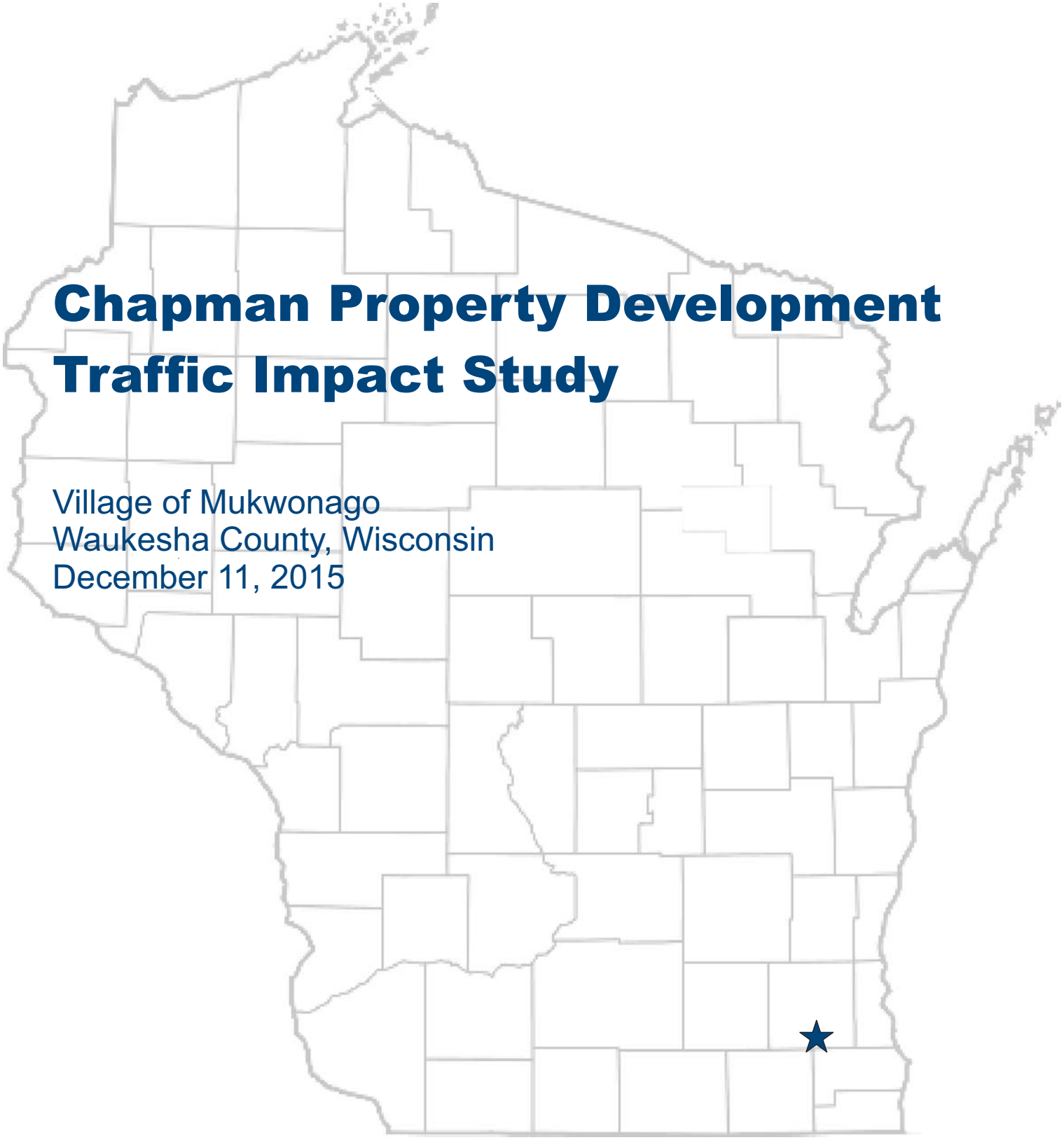

TRAFFIC IMPACT ANALYSIS FOR:

CHAPMAN PROPERTY DEVELOPMENT

VILLAGE OF MUKWONAGO, WISCONSIN

DATE SUBMITTED: December 11, 2015

PREPARED FOR:
Village of Mukwonago
625 S. Rochester Street
Mukwonago, WI 53149
Contact Person: Fred Winchoswky, Village President

PREPARED BY:
TADI
N36 W7505 Buchanan Street
Cedarburg, WI 53012
Phone: (262)-377-1845
Fax: (262)-377-4381
Contact Persons: John A. Bieberitz, P.E., PTOE (WisDOT TIA Certification #SE05-804-044)
Tammi Czewski, P.E., PTOE (WisDOT TIA Certification #SE05-804-045)

"I certify that this Traffic Impact Analysis has been prepared by me or under my immediate supervision and that I have experience and training in the field of traffic and transportation engineering."

_____
Tamara S. Czewski
Wisconsin Registration #37558
TADI

TRAFFIC ANALYSIS & DESIGN, INC.

TABLE OF CONTENTS

LIST OF EXHIBITS ii

LIST OF APPENDICES iv

CHAPTER 1 – INTRODUCTION & EXECUTIVE SUMMARY 1

PART A – PURPOSE OF REPORT AND STUDY OBJECTIVES 1
PART B – EXECUTIVE SUMMARY 1
PART C – CONCLUSION 4

CHAPTER 2 – PROPOSED DEVELOPMENT 5

PART A – ON-SITE DEVELOPMENT 5
PART B – STUDY AREA 5
PART C – OFF-SITE LAND USE AND DEVELOPMENT 6
PART D – SITE ACCESSIBILITY 6

CHAPTER 3 – ANALYSIS OF EXISTING CONDITIONS 8

PART A – PHYSICAL CHARACTERISTICS 8
PART B – TRAFFIC VOLUMES 8
PART C – CAPACITY LEVEL OF SERVICE 9
PART D – SOURCES OF DATA 9

CHAPTER 4 – PROJECTED TRAFFIC 11

PART A – BACKGROUND TRAFFIC FORECASTING 11
PART B – ON-SITE AND OFF-SITE DEVELOPMENT TRAFFIC FORECASTING 11
PART C – BUILD AND TOTAL TRAFFIC 13

CHAPTER 5 – TRAFFIC AND IMPROVEMENT ANALYSIS 14

PART A – SITE ACCESS 14
PART B – CAPACITY / LEVEL OF SERVICE ANALYSIS 14
PART C – QUEUEING ANALYSIS 16
PART D – PEDESTRIAN, BICYCLE, AND MULTI-USE TRAIL CONSIDERATIONS 17
PART E – SPEED CONSIDERATION/SIGHT DISTANCE 17
PART F –TRAFFIC CONTROL NEEDS 18
PART G –WARRANT ANALYSIS 18

CHAPTER 6 – CONCLUSIONS AND RECOMMENDATIONS 20

PART A – RECOMMENDATIONS 20
PART B – CONCLUSION 21

LIST OF EXHIBITS

Chapter 1

Exhibit 1-1 .....Conceptual Site Plan
Exhibit 1-3 .....Base Year 2016 Build Traffic Recommended Improvements
Exhibit 1-4 .....Base Year 2016 Total Traffic Recommended Improvements
Exhibit 1-9 .....Horizon Year 2026 Build Traffic Recommended Improvements

Chapter 2

Exhibit 2-1 .....Site Location Map
Exhibit 2-2 .....Conceptual Site Plan
Exhibit 2-3 .....Development Staging Detail
Exhibit 2-4 .....Existing and Proposed Land Uses

Chapter 3

Exhibit 3-1 .....Existing Transportation System
Exhibit 3-2A.....Existing Year 2015 Traffic Volumes
Exhibit 3-2B.....Base Year 2016 Background Traffic Volumes
Exhibit 3-3 .....Base Year 2016 Background Traffic Capacity/LOS Analysis

Chapter 4

Exhibit 4-2 .....Horizon Year 2026 Background Traffic Volumes
Exhibit 4-3A.....On-Site Development Trip Generation Table
Exhibit 4-3B.....Off-Site Development Trip Generation Table
Exhibit 4-4 .....Trip Distribution
Exhibit 4-5A.....Base Year 2016 On-Site Development Traffic Assignment – New Trips
Exhibit 4-7A.....Horizon Year 2026 On-Site Development Traffic Assignment – New Trips
Exhibit 4-8A.....Base Year 2016 Off-Site Development Traffic Assignment – New Trips
Exhibit 4-8C.....Base Year 2016 Off-Site Development Traffic Assignment – Pass-by Trips
Exhibit 4-8D.....Base Year 2016 Off-Site Development Traffic Assignment – Driveway Trips
Exhibit 4-11 .....Base Year 2016 Build Development Traffic Volumes
Exhibit 4-13 .....Horizon Year 2026 Build Development Traffic Volumes
Exhibit 4-14 .....Base Year 2016 Build Development Traffic Volumes
Exhibit 4-16 .....Horizon Year 2026 Build Development Traffic Volumes

Chapter 5

Capacity/LOS Analysis, Existing Transportation System

Exhibit 5-2 .....Horizon Year 2026 Background Traffic Capacity/LOS Analysis
Exhibit 5-3 .....Base Year 2016 Build Traffic Capacity/LOS Analysis
Exhibit 5-5 .....Horizon Year 2026 Build Traffic Capacity/LOS Analysis
Exhibit 5-6 .....Base Year 2016 Total Traffic Capacity/LOS Analysis
Exhibit 5-8 .....Horizon Year 2026 Total Traffic Capacity/LOS Analysis

Capacity/LOS Analysis, Improved Transportation System

Exhibit 5-9 .....Base Year 2016 Background Traffic Capacity/LOS Analysis
Exhibit 5-11 .....Horizon Year 2026 Background Traffic Capacity/LOS Analysis
Exhibit 5-12 .....Base Year 2016 Build Traffic Capacity/LOS Analysis
Exhibit 5-14 .....Horizon Year 2026 Build Traffic Capacity/LOS Analysis
Exhibit 5-15 .....Base Year 2016 Total Traffic Capacity/LOS Analysis
Exhibit 5-17 .....Horizon Year 2026 Total Traffic Capacity/LOS Analysis

Maximum Queue Lengths, Improved Transportation System

Exhibit 5-18 .....Base Year 2016 Background Traffic Maximum Queue Lengths
Exhibit 5-20 .....Horizon Year 2026 Background Traffic Maximum Queue Lengths
Exhibit 5-21 .....Base Year 2016 Build Traffic Maximum Queue Lengths
Exhibit 5-23 .....Horizon Year 2026 Build Traffic Maximum Queue Lengths
Exhibit 5-24 .....Base Year 2016 Total Traffic Maximum Queue Lengths
Exhibit 5-26 .....Horizon Year 2026 Total Traffic Maximum Queue Lengths
Exhibit 5-27 .....Intersection Sight Distance Photos/Drawings

Chapter 6

Intersection Conceptual Drawings (for ICE Report)

Exhibit 6-1 .....STH 83/Black Bear Boulevard Conceptual Layout – TWSC
Exhibit 6-2 .....STH 83/Black Bear Boulevard Conceptual Layout – Traffic Signal Control
Exhibit 6-3 .....STH 83/Black Bear Boulevard Conceptual Layout – Roundabout Control

LIST OF APPENDICES

Appendix A....Traffic

- *A1. Traffic Counts, Summary of PHF and Percent Heavy Vehicles*
- *A2. Existing Signal Timings*
- *A3. WisDOT Forecasts*

Appendix B....Existing Transportation System with Background Traffic Operational Analysis

- *B1. Base Year 2016 Background Traffic*
- *B2. Horizon Year 2026 Background Traffic*

Appendix C....Existing Transportation System with Build Traffic Operational Analysis

- *C1. Base Year 2016 Build Traffic*
- *C2. Horizon Year 2026 Build Traffic*

Appendix D....Existing Transportation System with Total Traffic Operational Analysis

- *D1. Base Year 2016 Total Traffic*
- *D2. Horizon Year 2026 Total Traffic*

Appendix F.....Transportation System Improvements with Build Traffic Operational Analysis

- *F1. Base Year 2016 Build Traffic*
- *F2. Horizon Year 2026 Build Traffic*

Appendix G....Transportation System Improvements with Total Traffic Operational Analysis

- *G1. Base Year 2016 Total Traffic*
- *G2. Horizon Year 2026 Total Traffic*

Appendix H....Sight Distance Calculations

Appendix I .....Warrant Analysis for Intersection Traffic Control

- *I1. STH 83/Black Bear Boulevard ICE Worksheet*
- *I2. STH 83/Black Bear Boulevard Signal Warrant Analysis Worksheets*

CHAPTER 1 – INTRODUCTION & EXECUTIVE SUMMARY

PART A – PURPOSE OF REPORT AND STUDY OBJECTIVES

A mixed-use development plan is being proposed for the Chapman property generally located in the northwest quadrant of the STH 83 intersection with Black Bear Boulevard in the Village of Mukwonago, Waukesha County, Wisconsin. The entire development area for the Chapman property is approximately 105 acres with proposed access to STH 83 via an extension of Black Bear Boulevard to the west of STH 83 and through the site. Access is also proposed to CTH NN via new roads connecting to an existing residential neighborhood on the south side of the property.

An Initial Review document was prepared for this site and submitted to the Wisconsin Department of Transportation (WisDOT) on October 5, 2015. WisDOT responded with comments and changes to the proposed trip generation table, trip distribution, off-site developments and exhibit changes, which was addressed and incorporated into this TIA report.

The WisDOT-approved initial review assumptions were utilized in the traffic impact analysis (TIA) report for the proposed development, which follows the WisDOT *Statewide TIA Guidelines*, adopted January 2014. The TIA evaluates the expected AM and PM peak hour operating conditions with base year 2016 and horizon year 2026 background traffic plus the additional traffic volumes expected from the buildout of the proposed off-site development (Simon property east of STH 83) and on-site Chapman development. Based on the intersection capacity analysis, geometric and traffic control improvements were recommended to mitigate unacceptable delays or traffic queues at the study intersections. This report documents the procedures, findings and conclusions of this analysis.

PART B – EXECUTIVE SUMMARY

The executive summary includes a description of the study area, description of the development and conclusions based on the findings of the TIA.

B1. Location of Study Site with Respect to Area Roadway Network

The study area is proposed to include the following existing intersections:

- STH 83 & Black Bear Boulevard (stop sign control)
- STH 83 & CTH NN (traffic signal control)
- CTH NN & Fairwinds Boulevard (traffic signal control)

B2. Proposed Development

The conceptual site plan is shown on Exhibit 1-1. While no formal site plan has been developed, initial buildout is expected to include about 35,000 square feet of retail/shopping center use and about 184 apartment units. By full buildout, development is expected to include about 77,500 square feet of office space, an additional 226 apartment units, 50 single family homes, and 30 rental townhouse units.

Access for the development is proposed through the residential street system to the south (Fairwinds Boulevard, Rosewood Drive, and Oldfield Avenue) and at a new connection/west leg to the STH 83/Black Bear Boulevard intersection.

Off-site developments were evaluated in this study as "Build" traffic conditions, per WisDOT. These developments include the remaining buildout of the Simon property, east of STH 83 surrounding Black Bear Boulevard. The remaining buildout evaluated in this study includes: Kwik Trip (completed now, but not at the time of the traffic counts at the study intersections), 20 condominium units, and a Fast Track Quick Lube Vehicle Shop with upstairs offices and an attached 2,200 square-foot coffee shop with drive-through window.

B3. Recommended Improvements

The study area intersections were analyzed based on the procedures set forth in the *2010 Highway Capacity Manual* (HCM) using Synchro 8. For the purpose of this study, LOS D was used to define acceptable peak hour operating conditions. *Note that improvements are recommended to WisDOT, Waukesha County, and the Village of Mukwonago for consideration and are not legally binding. All agencies reserve the right to determine alternative solutions*

Base Year 2016 Background Traffic Improvements

Base Year 2016 Background traffic volumes are expected to result in acceptable peak hour traffic operations at the study intersections. Therefore, no improvements are recommended for this traffic volume scenario.

Horizon Year 2026 Background Traffic Improvements

Horizon Year 2026 Background traffic volumes are expected to result in acceptable peak hour traffic operations at the study intersections. Therefore, no improvements are recommended for this traffic volume scenario.

Base Year 2016 Build Traffic Improvements (Exhibit 1-3)

Base Year 2016 Build traffic volumes include the Base Year 2016 Background traffic volumes plus the additional traffic expected from the full buildout of the Simon property east of STH 83. The Base Year 2016 Build improvements are recommended as follows.

STH 83/CTH NN

- Add a flashing yellow arrow (FYA) for the southbound left-turn signal phase to allow protected/permitted left-turn movements opposing the northbound protected only phase for the dual left-turn.

Base Year 2016 Total Traffic Improvements (Exhibit 1-4)

Base Year 2016 Total traffic volumes include the Base Year 2016 Build traffic volumes plus the additional traffic expected from the initial buildout of the Chapman property west of STH 83. The Base Year 2016 Total improvements are recommended as follows.

STH 83/Black Bear Boulevard

- Construct a new eastbound approach with a left-turn lane plus appropriate taper and shared through/right-turn lane.
- Restripe the westbound lanes for a continuous left-turn lane plus shared through/right-turn lane.
- Install traffic signal control with actuated two-phased signal operations and coordination with the STH 83/CTH NN signal timings.
- Roundabout control is a feasible alternative at this intersection and must be provided as an alternative option, per WisDOT. If a roundabout is selected by WisDOT, it is

recommended to be a two-lane roundabout with two-lane entries for the northbound and southbound approaches, and one-lane entries for the eastbound and westbound approaches.

83/CTH NN

- Add a flashing yellow arrow (FYA) for the southbound left-turn signal phase to allow protected/permitted left-turn movements opposing the northbound protected only phase for the dual left-turn.
- Coordinate the signal with the proposed traffic signal at STH 83/Black Bear Boulevard.

CTH NN/Fairwinds Boulevard/School Driveway

- Add time-of-day plans during the AM and PM school peak hours to coordinate the signal with the traffic signal operations at STH 83/CTH NN.

Horizon Year 2026 Build Traffic Improvements (Exhibit 1-9)

Horizon Year 2026 Build traffic volumes include the Horizon Year 2026 Background traffic volumes plus the additional traffic expected from the full buildout of the Simon property east of STH 83. The Horizon Year 2026 Build improvements are as follows:

STH 83/Black Bear Boulevard

- Construct a new eastbound approach with a left-turn lane plus appropriate taper and shared through/right-turn lane.
- Restripe the westbound lanes for a continuous left-turn lane plus shared through/right-turn lane.
- Install traffic signal control with actuated two-phased signal operations and coordination with the STH 83/CTH NN signal timings.
- Roundabout control is a feasible alternative at this intersection and must be provided as an alternative option, per WisDOT. If a roundabout is selected by WisDOT, it is recommended to be a two-lane roundabout with two-lane entries for the northbound and southbound approaches, and one-lane entries for the eastbound and westbound approaches.

83/CTH NN

- Add a flashing yellow arrow (FYA) for the southbound left-turn signal phase to allow protected/permitted left-turn movements opposing the northbound protected only phase for the dual left-turn.
- Coordinate the signal with the proposed traffic signal at STH 83/Black Bear Boulevard.

CTH NN/Fairwinds Boulevard/School Driveway

- Add time-of-day plans during the AM and PM school peak hours to coordinate the signal with the traffic signal operations at STH 83/CTH NN.

Horizon Year 2026 Total Traffic Improvements

Horizon Year 2026 Total traffic volumes include the Horizon Year 2026 Build traffic volumes plus the additional traffic expected from the full buildout of the Chapman property west of STH 83. The Horizon Year 2026 Total improvements are the same as those recommended for the

Base Year 2016 Total and Horizon Year 2026 Build traffic volumes. No additional improvements are recommended for this traffic volume scenario.

PART C – CONCLUSION

With the recommended improvements listed above, all study intersections are expected to operate acceptably through the horizon year 2026 with full buildout of the Simon property east of STH 83 and full buildout of the Chapman property west of STH 83.

N

NOT TO SCALE

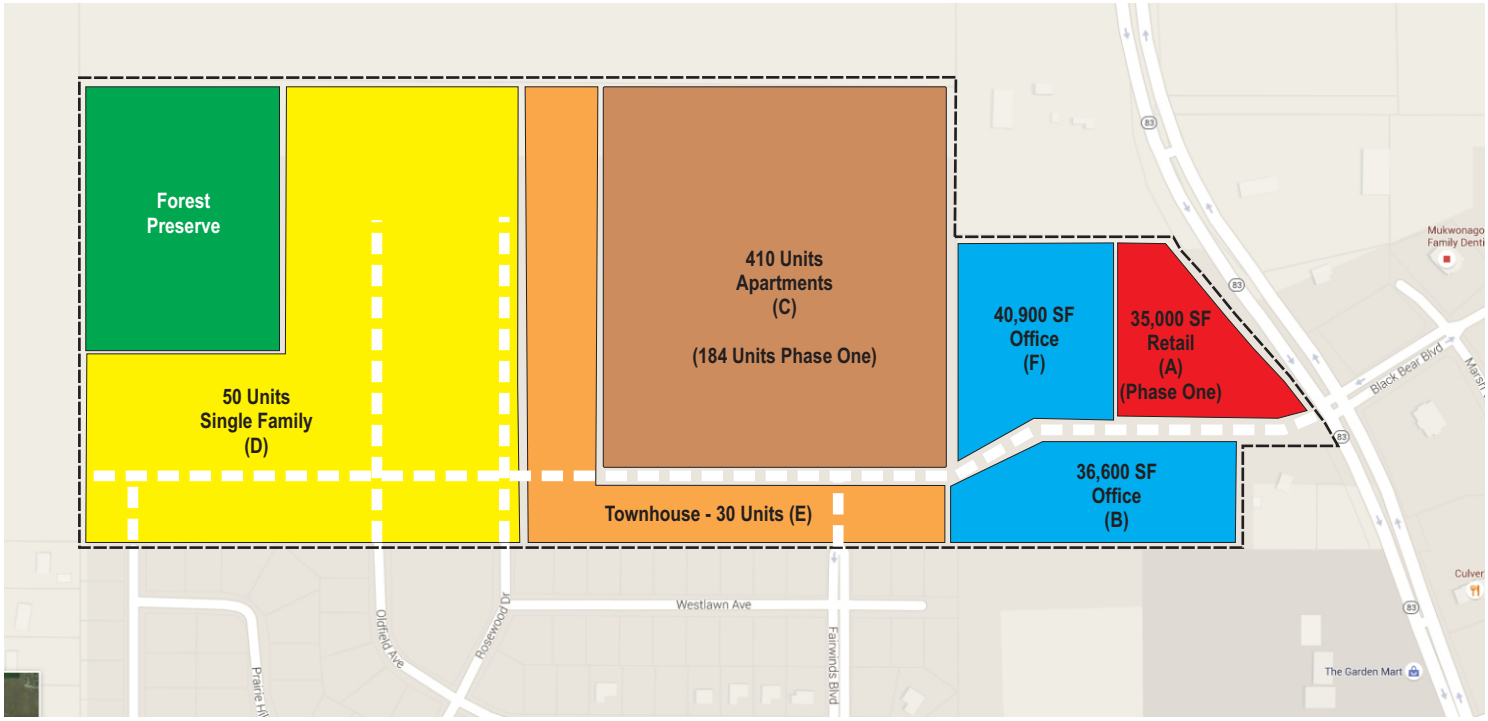

TADI
TRAFFIC ANALYSIS & DESIGN, INC.
1844: 11-11-15

EXHIBIT 1-1
CONCEPTUAL SITE PLAN

CHAPMAN PROPERTY DEVELOPMENT
MUKWONAGO, WISCONSIN

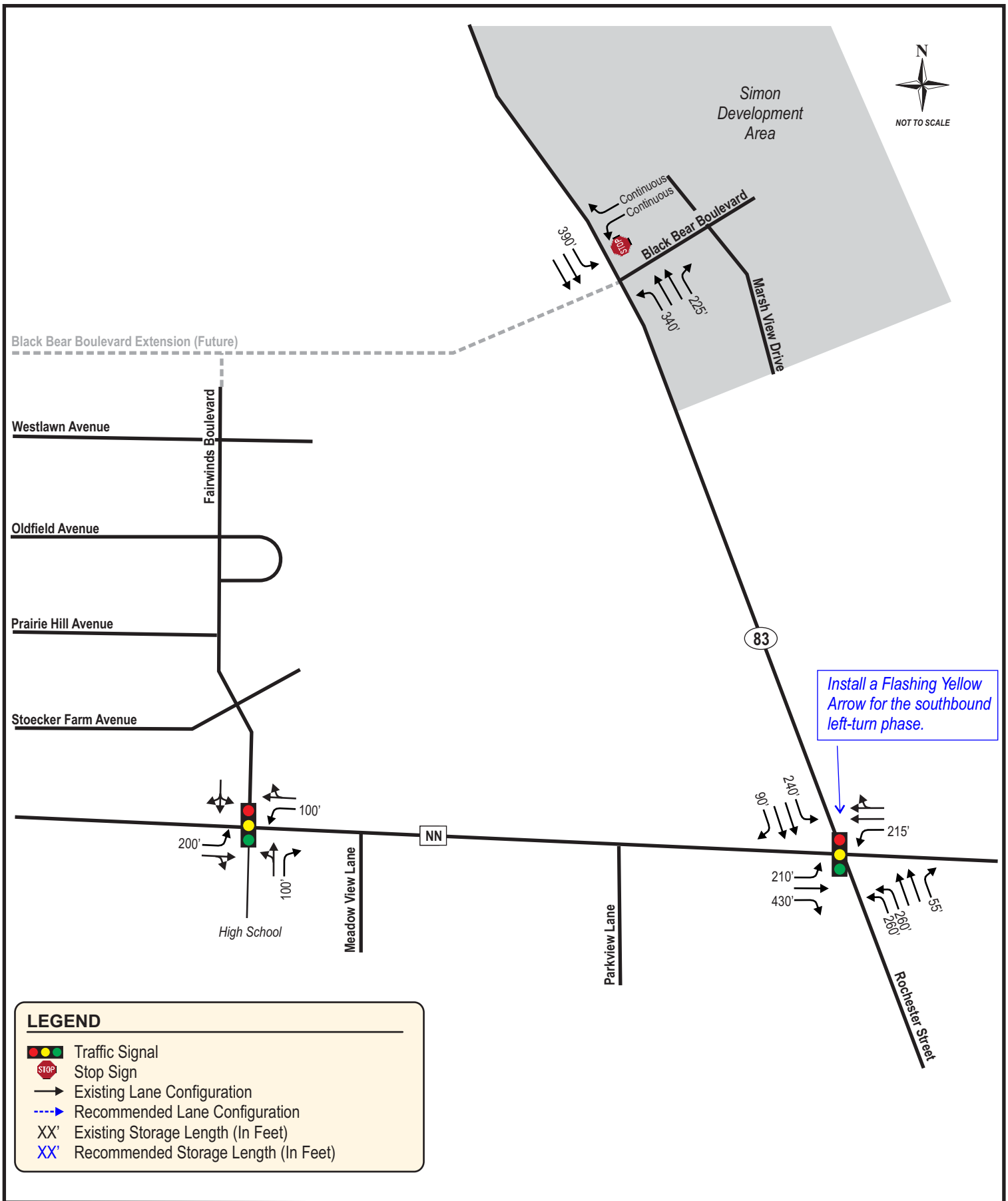

TADI
TRAFFIC ANALYSIS & DESIGN, INC.
1844: 11-11-15

EXHIBIT 1-3
BASE YEAR 2016 BUILD TRAFFIC
RECOMMENDED IMPROVEMENTS

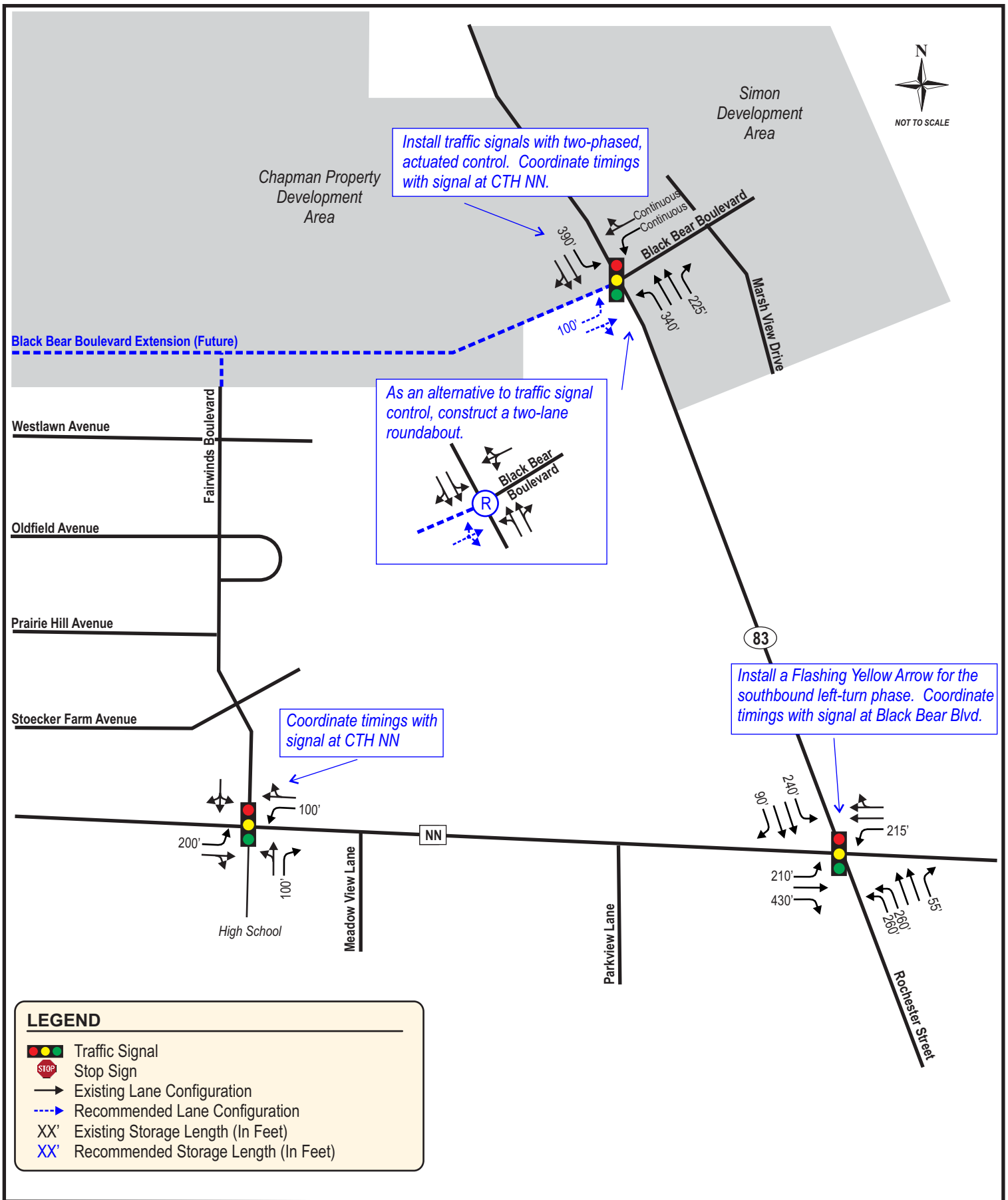

TADI
TRAFFIC ANALYSIS & DESIGN, INC.
1844: 11-11-15

EXHIBIT 1-4
BASE YEAR 2016 TOTAL TRAFFIC
RECOMMENDED IMPROVEMENTS

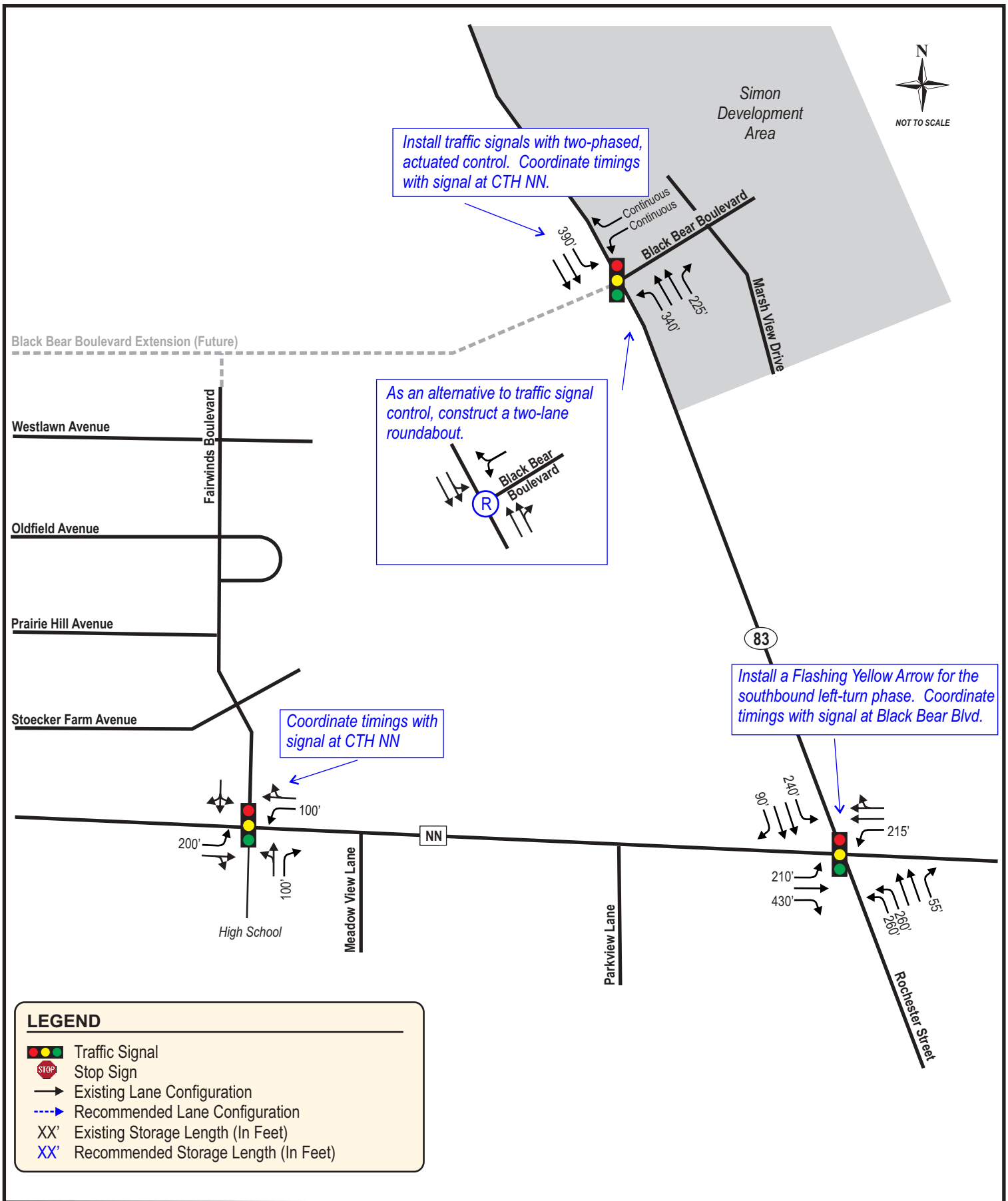

TADI
TRAFFIC ANALYSIS & DESIGN, INC.
1844: 11-11-15

EXHIBIT 1-9
HORIZON YEAR 2026 BUILD TRAFFIC RECOMMENDED IMPROVEMENTS

CHAPTER 2 – PROPOSED DEVELOPMENT

PART A – ON-SITE DEVELOPMENT

A1. Development Description and Site Location

The on-site development is proposed to be constructed on a 105-acre property that is currently covered by fields. Plans for the site include commercial developments fronting STH 83 and residential developments to the west. A street map illustrating the location of the proposed development site with respect to the surrounding roadway system is shown on Exhibit 2-1.

A2. Land Use and Intensity

While no formal site plan has been developed, it is estimated that the property will include a forest preserve area, single-family residential, multi-family residential, office space, and retail. For this study, it was assumed that the following land use types and sizes could be developed on site:

<u>Initial Buildout (by 2016)</u>

- Shopping Center – 35,000 square feet
- Apartments – 184 units

<u>Full Buildout (by 2021)</u> – *Includes Initial Buildout Land Uses*

- Shopping Center – 35,000 square feet
- General Office – 36,600 square feet
- Apartments – 410 units
- Single-Family Residential – 50 units
- Rental Townhouse – 30 units
- General Office – 40,900 square feet

A3. Proposed Site Plan

Exhibit 2-2 shows the conceptual site plan for the proposed Chapman property. The conceptual plan is color-coded to show general areas for the single-family residential, townhomes, apartments, office, and retail developments. The plan also shows the area to be maintained as a forest preserve (no development).

A4. Development Phasing and Timing

Initial buildout of the proposed Chapman property development is expected by 2016 and full buildout is expected by 2021. According to the WisDOT TIA guidelines, the base year shall be the year of initial buildout (2016), and the horizon year shall be established as 10 years after opening of the proposed development or five years after buildout, whichever is greater. The horizon year for this study is therefore the year 2026. The development staging detail for the Chapman property is shown on Exhibit 2-3.

PART B – STUDY AREA

B1. Influence Area

The Chapman property is located on the northern end of the Village of Mukwonago, near the crossroads of STH 83 and CTH NN. CTH NN leads to Jericho and Eagle further west, and to I-43 to the east. STH 83 leads to Genessee further north, and then eventually to USH 18 and I-94.

To the south, STH 83 leads to downtown Mukwonago and I-43. Further south, STH 83 leads to Waterford.

The land uses surrounding the Chapman property are mostly commercial uses fronting STH 83, and residential uses fronting CTH NN. Mukwonago schools are located on the south side of CTH NN (both east and west of STH 83), which impact the peak hour traffic volumes throughout the study area. The existing and proposed land uses for the study area are shown on Exhibit 2-4.

B2. Area of Significant Traffic Impact

The study area is proposed to include the following existing intersections:

- STH 83 & Black Bear Boulevard (stop sign control)
- STH 83 & CTH NN (traffic signal control)
- CTH NN & Fairwinds Boulevard (traffic signal control)

PART C – OFF-SITE LAND USE AND DEVELOPMENT

The Simon Group is developing a 40-acre site east of STH 83 in the vicinity of Black Bear Boulevard. The site includes the Culver's restaurant parking lot expansion, the Waukesha State Bank and vacant space, Kwik Trip, plus a dental office and condominium/townhouse units. As of October 5, 2015, the Culver's restaurant parking lot expansion, the Waukesha State Bank, Kwik Trip, dental office, and most of the condominium/townhouse units have already been constructed. The Kwik Trip opened for business on August 13, 2015, but the STH 83/Black Bear Boulevard traffic counts were collected prior to that date. Therefore the Kwik Trip development trip generation and traffic volumes were evaluated as an additional off-site development in this study.

Development for the vacant space south of the Waukesha State Bank is currently being planned to include a Fast Track oil change business with corporate office space above and an attached coffee shop with drive-through window.

For this study, the remaining off-site development types and sizes for the Simon Development are as follows:

- Kwik Trip – 27 fueling positions
- Condominium/Townhomes – 20 units
- Fast Track Quick Lube Vehicle Shop – 4 service positions
- Coffee Shop with drive-through window – 2,200 square feet
- Office (Fast Track offices) – 9 employees

WisDOT has indicated that the additional traffic from the remaining buildout of the Simon Development should be included in the "Build" analysis for the TIA.

PART D – SITE ACCESSIBILITY

D1. Study Area Roadways

The study area roadways are discussed below:

<u>STH 83 (Rochester Street)</u> is a four-lane divided north/south Principal Arterial with a 35-mph speed limit within the study area. STH 83 transitions to a 55-mph speed limit about 1,000 feet north of Black Bear Boulevard. According to WisDOT, the 2012 annual average daily traffic

(AADT) on STH 83 was 10,100 vehicles per day (vpd) just south of Black Bear Boulevard. The 2012 AADT on STH 83, south of CTH NN was 14,900 vpd. Sidewalks and/or multi-use trails are located on both sides of STH 83 through the study area.

CTH NN is primarily a two-lane undivided east/west roadway with a 40-mph speed limit within the study area. In the vicinity of the intersection with STH 83, CTH NN is divided with a raised median. CTH NN is designated as Principal Arterial west of STH 83, and a Minor Arterial east of STH 83. According to WisDOT, the 2012 AADT on CTH NN was 12,500 vpd west of STH 83 and 8,800 vpd east of STH 83. A multi-use trail is located on the north side of CTH NN, west of STH 83 and on the south side of CTH NN for about 1,000 feet east of STH 83. A sidewalk is located on the north side of CTH NN, east of STH 83.

Black Bear Boulevard is a short, four-lane east/west Local road with a 25 mph speed limit. Black Bear Boulevard provides access to the commercial/multi-family residential Simon Development east of STH 83. Black Bear Boulevard has sidewalks on both sides of the road.

D2. Alternative Modes of Transportation

There are no alternative modes of transportation in this study area that would impact traffic volumes or trip generation estimates used in this study.

LEGEND

- On-Site Development Area: Chapman Property
- Off-Site Developments: Simon Development (Under Construction)
- Study Intersection

N

NOT TO SCALE

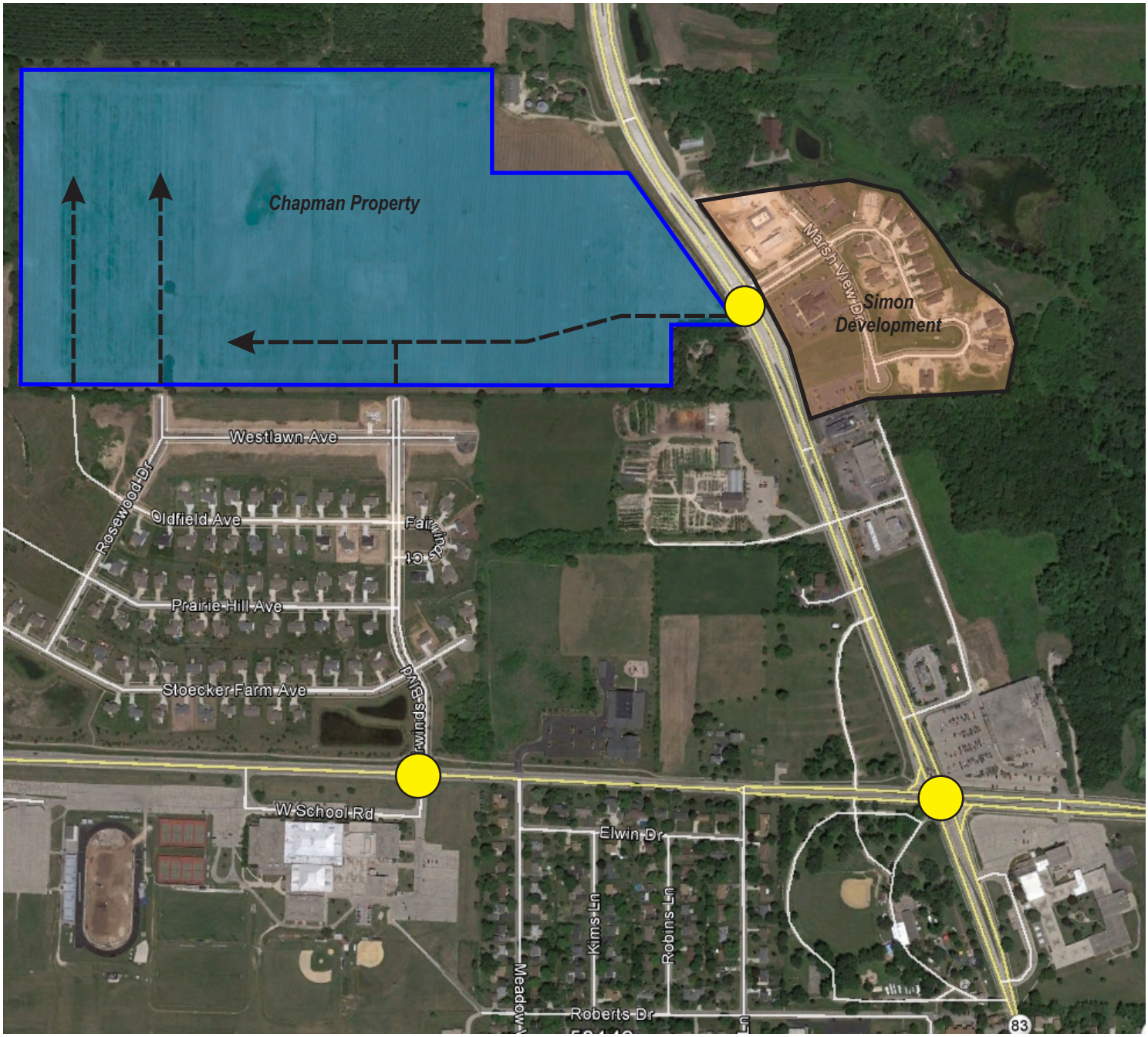

TADI
TRAFFIC ANALYSIS & DESIGN, INC.
1844: 11-11-15

EXHIBIT 2-1
SITE LOCATION MAP

CHAPMAN PROPERTY DEVELOPMENT
MUKWONAGO, WISCONSIN

N

NOT TO SCALE

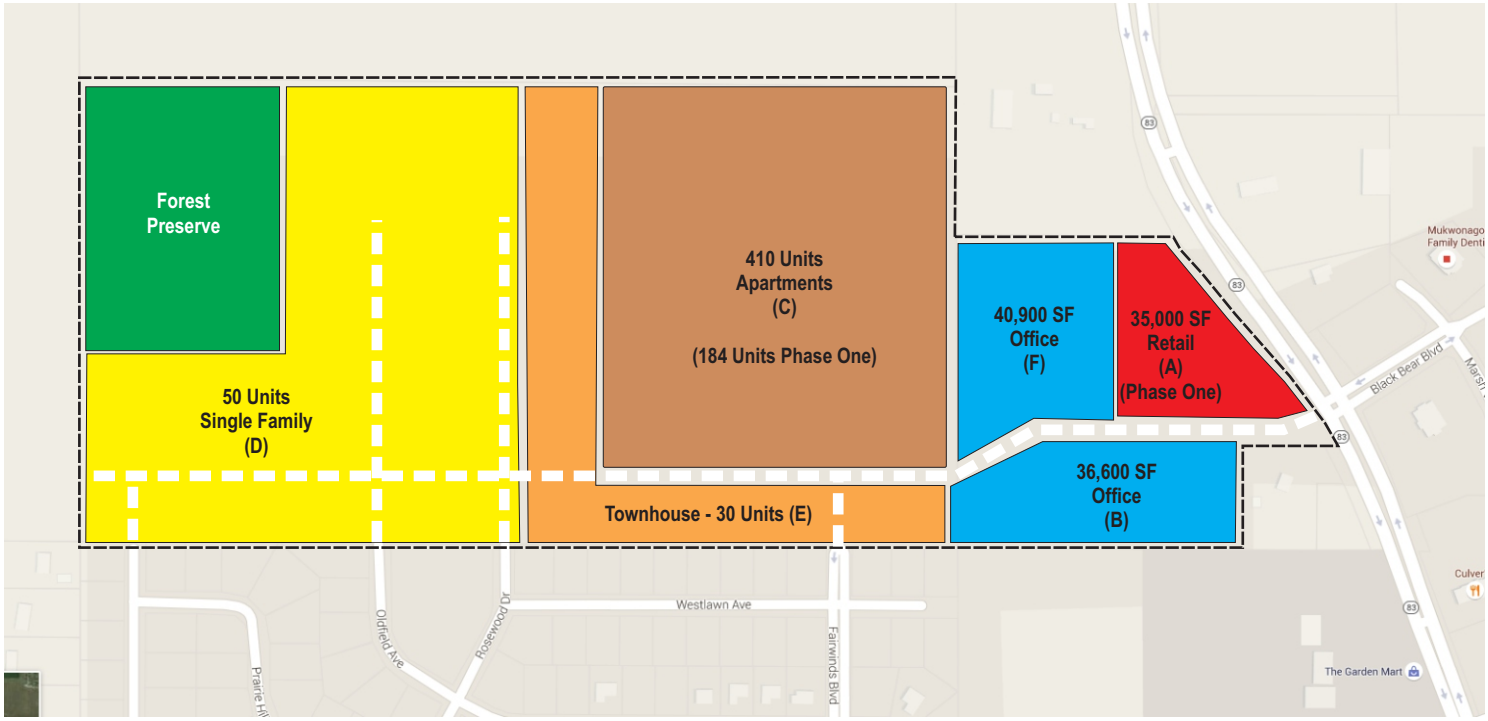

TADI
TRAFFIC ANALYSIS & DESIGN, INC.
1844: 11-11-15

EXHIBIT 2-2
CONCEPTUAL SITE PLAN

CHAPMAN PROPERTY DEVELOPMENT
MUKWONAGO, WISCONSIN

LEGEND

- Phase One Buildout
- Full Buildout

N

NOT TO SCALE

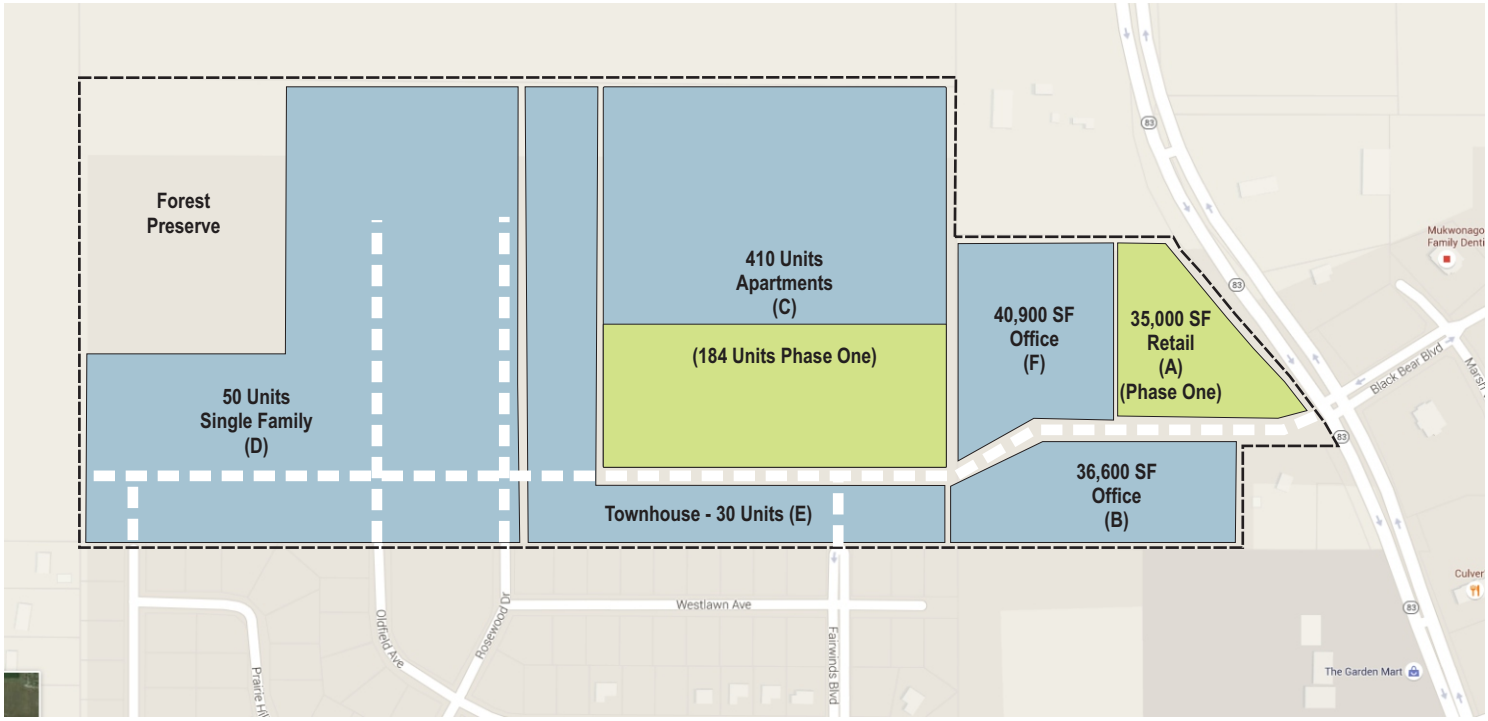

TADI
TRAFFIC ANALYSIS & DESIGN, INC.
1844: 11-11-15

EXHIBIT 2-3
DEVELOPMENT STAGING DETAIL

CHAPMAN PROPERTY DEVELOPMENT
MUKWONAGO, WISCONSIN

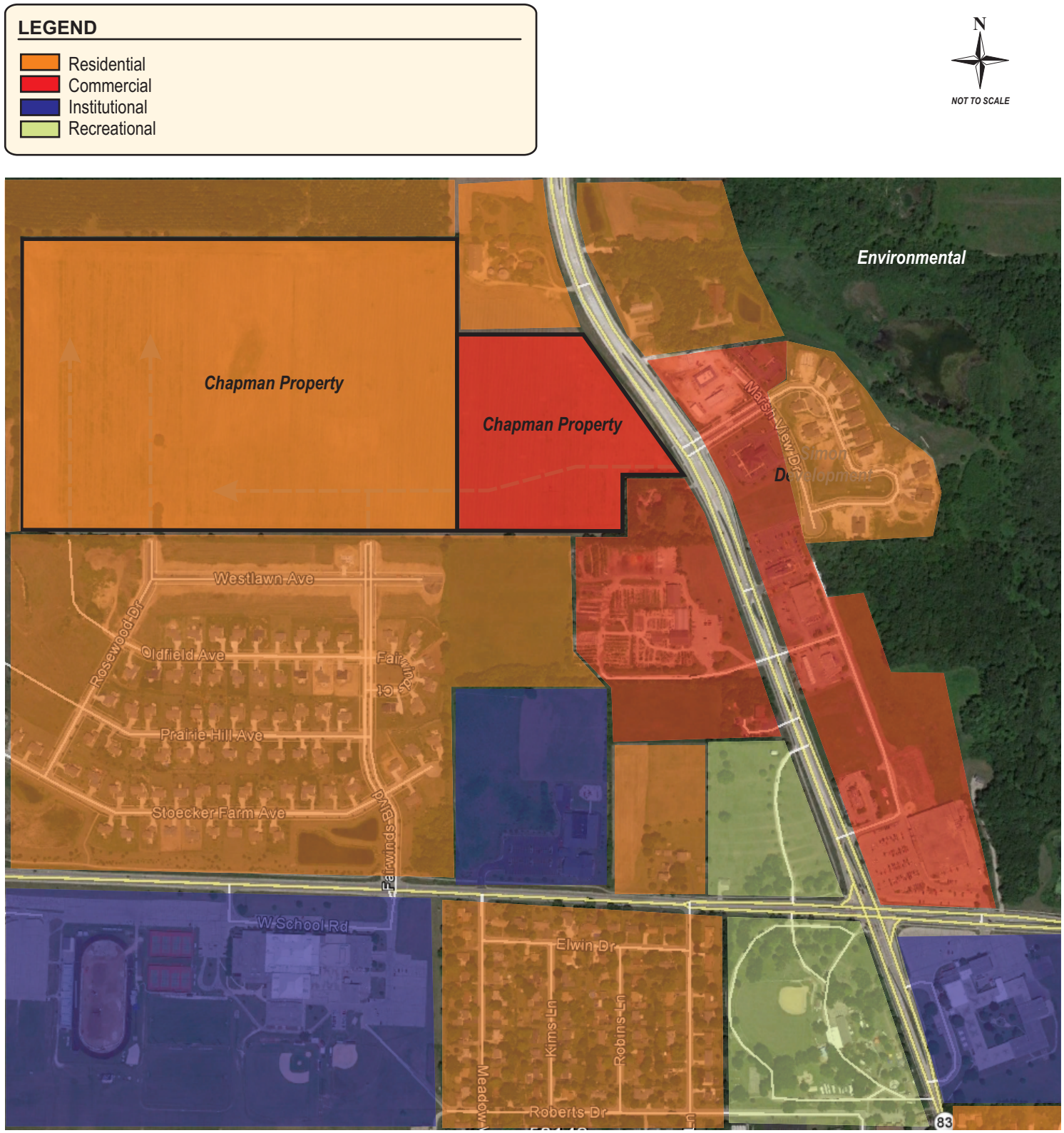

TADI
TRAFFIC ANALYSIS & DESIGN, INC.
1844: 11-11-15

EXHIBIT 2-4
EXISTING AND PROPOSED LAND USES

CHAPTER 3 – ANALYSIS OF EXISTING CONDITIONS

PART A – PHYSICAL CHARACTERISTICS

Exhibit 3-1 shows the existing transportation system detail for the roadways within the study area. The exhibit illustrates existing posted speed limits, distances between major intersections and driveways, and existing intersection geometrics (travel lanes, intersection turn lanes, traffic control, and turn-lane storage).

PART B – TRAFFIC VOLUMES

B1. Data Collection

TADI collected turning movement traffic counts at the STH 83/Black Bear Boulevard study intersection in late June 2015 when school was not in session (schools are located in the immediate study area to the east and west of the STH 83/CTH NN intersection) and the Kwik Trip was not yet open for business. The STH 83/Black Bear Boulevard intersection was counted from 6:00 a.m. to 6:00 p.m. (for signal warrant analyses).

TADI also collected traffic counts at the CTH NN/Fairwinds Boulevard intersection in late June 2015, but recollected these counts in late September in order to capture in-school traffic volumes to/from the high school driveway. The original traffic count was collected from 6:00-9:00 a.m. and from 3:00-6:00 p.m., but the recount was collected only for the study area peak hours (6:45-7:45 a.m. and 4:45-5:45 p.m.).

WisDOT collected turning movement traffic counts at the STH 83/CTH NN intersection in October 2013 when school was in session. These counts were also collected from 6:00 a.m. to 6:00 p.m.

The traffic count data collected for this study is located in Appendix A1.

B2. Peak Hours

Since the traffic counts on STH 83 and CTH NN were higher when school was in session than out-of-session, the WisDOT count at the STH 83/CTH NN intersection was used to determine the study area peak hour and for balancing traffic volumes through the adjacent study intersections. The recommended peak hours for the study area are therefore 6:45-7:45 a.m. and 4:45-5:45 p.m.

A table showing the intersection peak hour factors and approach heavy vehicle percentages for the weekday AM, weekday PM, and Saturday midday peak hours is located with the traffic counts in Appendix A1.

B3. Existing & Background Turning Movement Volumes

The existing turning movement volumes were balanced between intersections and are shown as the Existing Year 2015 traffic volumes are shown on Exhibit 3-2A. As explained in Chapter 4, Part A – Background Traffic Forecasting, WisDOT provided traffic forecasts for the base year 2016. These forecasted volumes were balanced between intersections and are shown as the Base Year 2016 Background Traffic Volumes on Exhibit 3-2B.

PART C – CAPACITY LEVEL OF SERVICE

C1. Level of Service Definitions

The study intersections were analyzed using the Synchro 8 traffic analysis model (outputs based on the 2010 Highway Capacity Manual). Intersection operation is defined by "level of service". Level of Service (LOS) is a quantitative measure that refers to the overall quality of flow at an intersection ranging from very good, represented by LOS 'A', to very poor, represented by LOS 'F'. For the purpose of this study, LOS D was used to define acceptable peak hour operating conditions. Descriptions of the various levels of service are as follows:

LOS A is the highest level of service that can be achieved. Under this condition, intersection approaches appear quite open, turning movements are easily made, and nearly all drivers find freedom of operation. At signalized and unsignalized intersections, average delays are less than 10 seconds.

LOS B represents stable operation. At signalized intersections, average vehicle delays are 10 to 20 seconds. At unsignalized intersections, average delays are 10 to 15 seconds.

LOS C still represents stable operation, but periodic backups of a few vehicles may develop behind turning vehicles. Most drivers begin to feel restricted, but not objectionably so. At signalized intersections, average vehicle delays are 20 to 35 seconds. At unsignalized intersections, average delays are 15 to 25 seconds.

LOS D represents increasing traffic restrictions as the intersection approaches instability. Delays to approaching vehicles may be substantial during short peaks within the peak period, but periodic clearance of long lines occurs, thus preventing excessive backups. At signalized intersections, average vehicle delays are 35 to 55 seconds. At unsignalized intersections, average delays are 25 to 35 seconds.

LOS E represents the capacity of the intersection. At signalized intersections, average vehicle delays are 55 to 80 seconds. At unsignalized intersections, average delays are 35 to 50 seconds.

LOS F represents jammed conditions where the intersection is over capacity and acceptable gaps for unsignalized intersections in the mainline traffic flow are minimal. At signalized intersections, average vehicle delays exceed 80 seconds. At unsignalized intersections, average delays exceed 50 seconds.

C2. Base Year 2016 Background Traffic Operating Conditions

The Base Year 2016 Background traffic capacity analysis was conducted using the existing geometrics and traffic control at the study intersections. As shown on Exhibit 3-3, all turning movements at the study intersections are expected to operate acceptably at LOS D or better during the weekday AM and PM peak hours. The traffic capacity/level of service analysis output sheets are located in Appendix B1.

PART D – SOURCES OF DATA

The following sources of data were used for the traffic impact analysis:

- Intersection turning movement counts: TADI & WisDOT
- Historical AADT volumes at the study intersections: WisDOT Coverage Counts and traffic forecast AADT map

- Existing land use: Waukesha County LIS Viewer
- Existing signal timings (Appendix A2): WisDOT & Waukesha County
- Base year and horizon year traffic forecasts: WisDOT
- Field Geometrics: TADI, Google Earth

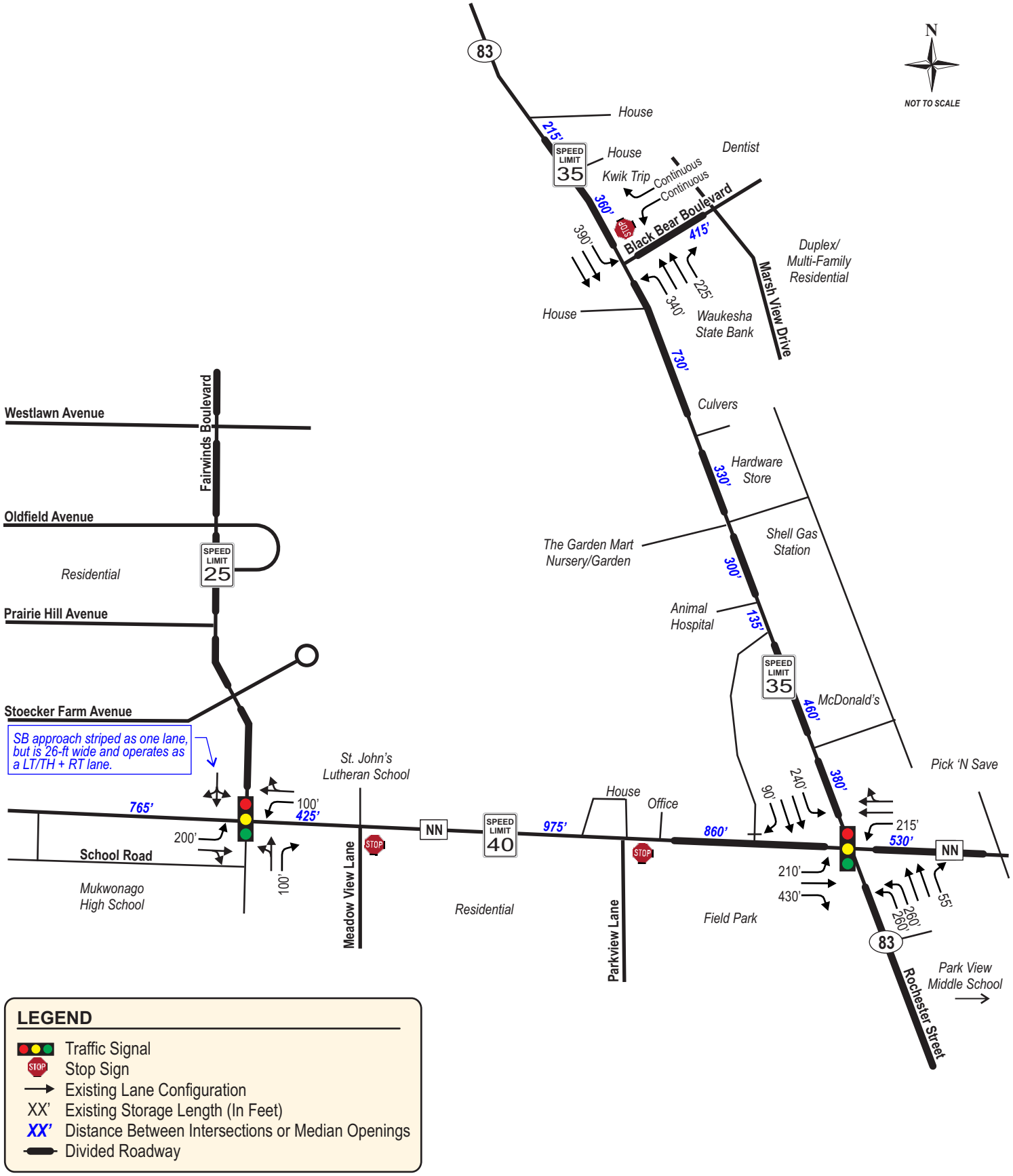

TADI
TRAFFIC ANALYSIS & DESIGN, INC.
1844: 11-11-15

EXHIBIT 3-1
EXISTING TRANSPORTATION DETAIL

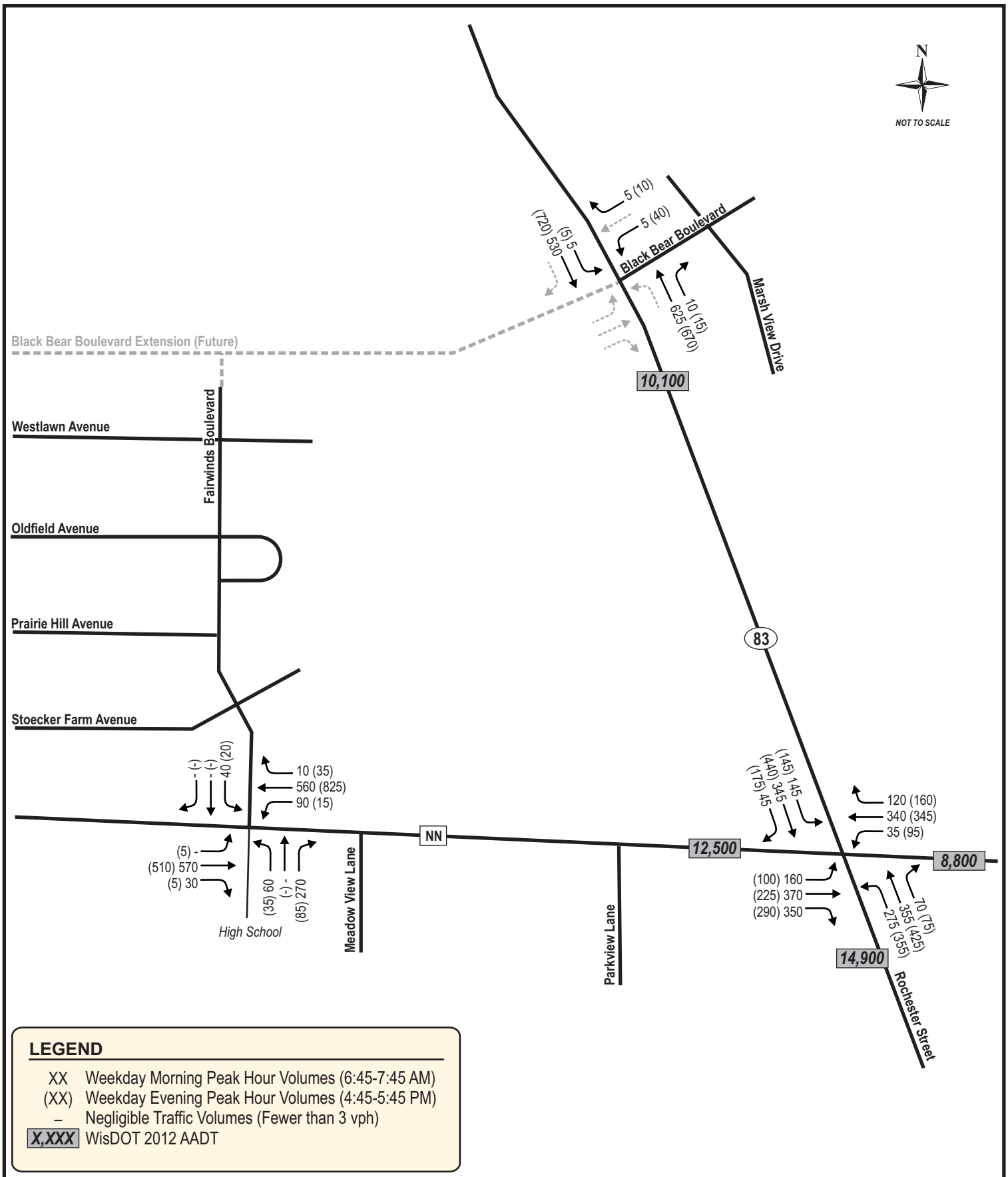

LEGEND

XX	Weekday Morning Peak Hour Volumes (6:45-7:45 AM)
(XX)	Weekday Evening Peak Hour Volumes (4:45-5:45 PM)
–	Negligible Traffic Volumes (Fewer than 3 vph)
X,XXX	WisDOT 2012 AADT

TADI
TRAFFIC ANALYSIS & DESIGN, INC.
1844: 11-11-15

EXHIBIT 3-2A
EXISTING YEAR 2015 TRAFFIC VOLUMES

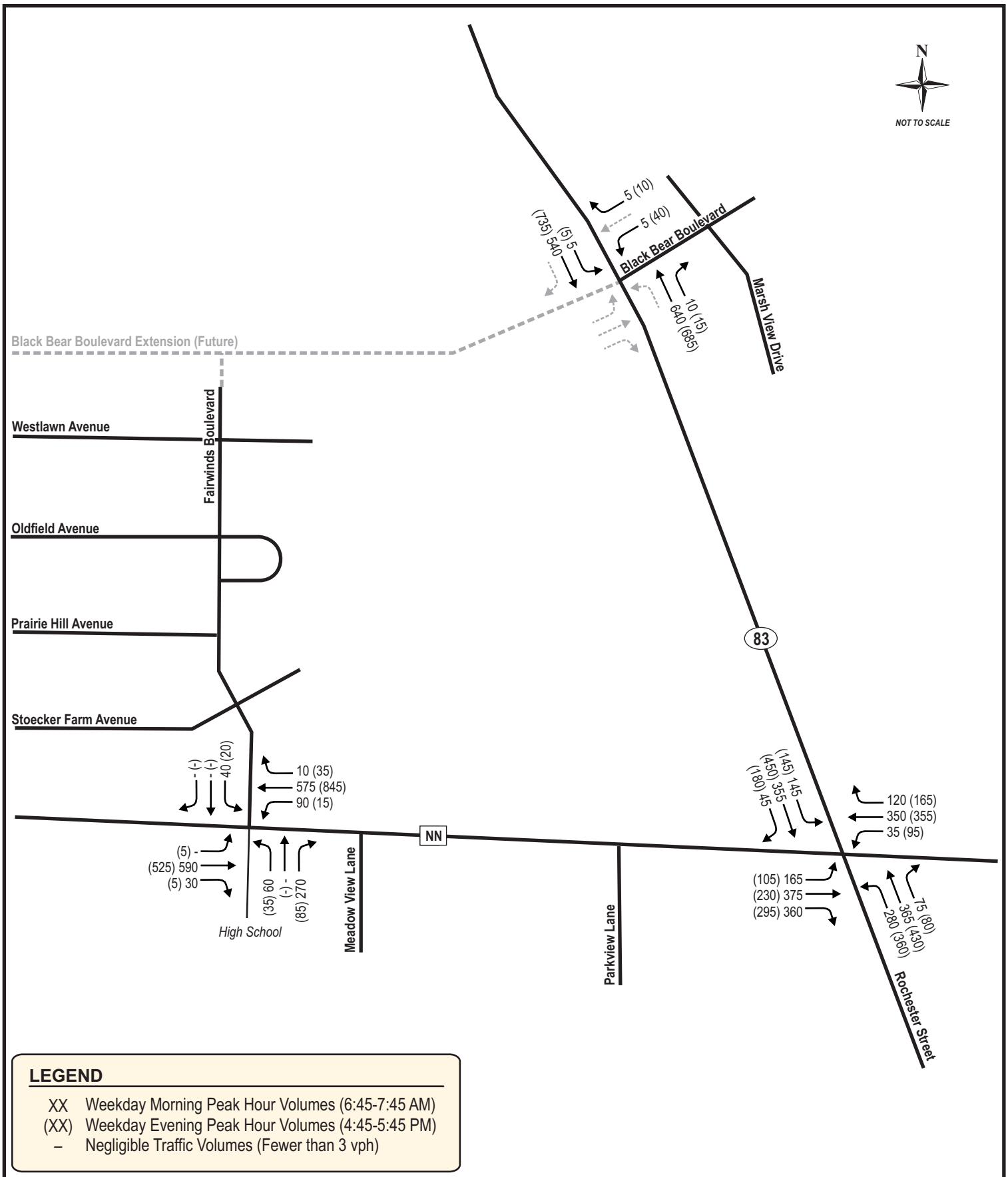

LEGEND

XX	Weekday Morning Peak Hour Volumes (6:45-7:45 AM)
(XX)	Weekday Evening Peak Hour Volumes (4:45-5:45 PM)
–	Negligible Traffic Volumes (Fewer than 3 vph)

TADI
TRAFFIC ANALYSIS & DESIGN, INC.
1844: 11-11-15

EXHIBIT 3-2B
BASE YEAR 2016 BACKGROUND TRAFFIC VOLUMES

N

NOT TO SCALE

Base Year 2016 Background Traffic Capacity/LOS Analysis
Existing Transportation System

Intersection	Traffic Control	Peak Hour	Level of Service per Movement by Approach											
			Eastbound			Westbound			Northbound			Southbound		
			LT	TH	RT	LT	TH	RT	LT	TH	RT	LT	TH	RT
STH 83 & Black Bear Boulevard	Stop Sign	AM	-	-	-	C	-	B	-	A	A	A	A	-
		PM	-	-	-	C	-	B	-	A	A	A	A	-
STH 83 & CTH NN	Traffic Signal	AM	C	C	C	C	C	C	D	C	C	D	C	C
		PM	C	C	C	C	C	C	C	C	B	D	C	C
CTH NN & Fairwinds Boulevard/School Drive	Traffic Signal	AM	B	B	B	B	A	A	C	C	D	D	D	D
		PM	A	A	A	A	A	A	C	C	C	C	C	C

TADI
TRAFFIC ANALYSIS & DESIGN, INC.
1844: 11-11-15

EXHIBIT 3-3
BASE YEAR 2016 BACKGROUND TRAFFIC CAPACITY/LOS ANALYSIS
EXISTING TRANSPORTATION SYSTEM

CHAPTER 4 – PROJECTED TRAFFIC

PART A – BACKGROUND TRAFFIC FORECASTING

Future traffic operations along the study roadways were evaluated for the horizon year of 2026, which is ten years after the initial buildout of the proposed site in 2016. The existing balanced peak hour traffic volumes were provided to WisDOT for developing Base Year 2016 and Horizon Year 2026 traffic volumes for this study. The WisDOT daily and peak hour traffic forecasts for the study area are located in Appendix A3. These forecasted traffic volumes for the existing transportation system were balanced between intersections and are shown as the Base Year 2016 Background Traffic Volumes on Exhibit 3-2B (from Chapter 3) and as the Horizon Year 2026 Background Traffic Volumes on Exhibit 4-2.

PART B – ON-SITE AND OFF-SITE DEVELOPMENT TRAFFIC FORECASTING

B1. Trip Generation

The expected traffic volumes generated by the proposed Greenfield site development were calculated based on trip rates published in the Institute of Transportation Engineer's (ITE) *Trip Generation Manual, 9th Edition, 2012*.

The trip generation table for the initial and full buildout of the on-site development is shown on Exhibit 4-3A. After linked trip reductions (described below), the initial buildout of the Chapman property development is expected to generate about 2,560 daily driveway trips, 130 driveway trips during the weekday AM peak hour (40 entering and 90 exiting) and 235 driveway trips during the weekday PM peak hour (130 entering and 105 exiting). The full buildout of the Chapman property development is expected to generate about 5,570 daily driveway trips, 425 driveway trips during the weekday AM peak hour (180 entering and 245 exiting) and 560 driveway trips during the weekday PM peak hour (280 entering and 280 exiting).

The trip generation table for the remaining buildout of the off-site development is shown on Exhibit 4-3B. Including pass-by trips, the remaining buildout of the Simon Development is expected to generate about 5,590 daily driveway trips, 515 driveway trips during the weekday AM peak hour (260 entering and 255 exiting) and 445 driveway trips during the weekday PM peak hour (225 entering and 220 exiting).

B2. Mode Split

For this study, the effect of organized car pools, van pools, buses, bicycles, and pedestrians were considered insignificant factors on traffic volumes in the area, and therefore, the effects of these alternative modes of travel were not included in this project.

B3. Determination of Pass-by, Internally-Linked, Multi-Linked and Externally-Linked Trip Traffic

Linked Trips

About 10 percent of the Kwik Trip and coffee shop trips are expected to be linked trips with the other land uses within the Simon Development site. Since the coffee/donut shop is proposed to be connected to the Fast Track quick lube shop, it is expected that a high number of Fast Track customers will wait at the coffee shop while their vehicle is being serviced. Therefore, it was assumed that 40 percent of all Fast Track trips would be linked trips.

For the proposed shopping center development on the Chapman property, 10 percent were assumed to be linked with the existing and proposed residential development areas.

Pass-by Trips

Pass-by trips are calculated after linked trip reductions to the total trips generated by each land use. It is expected that the Kwik Trip will have about 55 percent pass-by trips from STH 83 (150 in the AM peak hour and 180 in the PM peak hour). It is also expected that the coffee shop will have about 10 percent pass-trips from STH 83 (20 in the AM peak hour and 10 in the PM peak hour).

WisDOT limits all pass-by trips to 10 percent or less of the directional peak hour traffic volumes on STH 83. The pass-by trips for the Kwik Trip and coffee shop meet, but do not exceed 10 percent of the directional peak hour traffic along STH 83.

Since the Kwik Trip and coffee shop development pass-by trips comprise the entire 10 percent WisDOT limit for pass-by trips, no additional pass-by trips were estimated for the Chapman property development.

Including pass-by trips, the remaining buildout of the Simon Development is expected to generate about 5,590 daily driveway trips, 515 driveway trips during the weekday AM peak hour (260 entering and 255 exiting) and 445 driveway trips during the weekday PM peak hour (225 entering and 220 exiting).

B4. Trip Distribution

The proposed trip distribution for the on-site and off-site developments are listed below and also shown on Exhibit 4-4. The trip distribution was based upon the existing daily and peak hour traffic patterns throughout the study area.

- 30% to/from the north on STH 83
- 35% to/from the south on STH 83
- 10% to/from the west on CTH NN
- 25% to/from the east on CTH NN

B5. Trip Assignment

The new site trips were assigned to the study area intersections based on the proposed trip distributions listed above.

Base Year 2016 On-Site Development Traffic Assignment

- Exhibit 4-5A: New Trips

Horizon Year 2026 On-Site Development Traffic Assignment

- Exhibit 4-7A: New Trips

Base Year 2016/Horizon Year 2026 Off-Site Development Traffic Assignment

- Exhibit 4-8A: New Trips
- Exhibit 4-8C: Pass-by Trips
- Exhibit 4-8D: Driveway Trips

PART C – BUILD AND TOTAL TRAFFIC

As directed by WisDOT, the off-site development traffic assignment was added to the Background traffic volumes to develop the Build traffic volumes. The on-site development traffic assignment was added to the Build traffic volumes to develop the Total traffic volumes. The following exhibits were prepared to show the traffic volumes evaluated for this study:

- Exhibit 4-11: Base Year 2016 Build Development Traffic Volumes
- Exhibit 4-13: Horizon Year 2032 Build Development Traffic Volumes
- Exhibit 4-14: Base Year 2016 Total Development Traffic Volumes
- Exhibit 4-16: Horizon Year 2032 Total Development Traffic Volumes

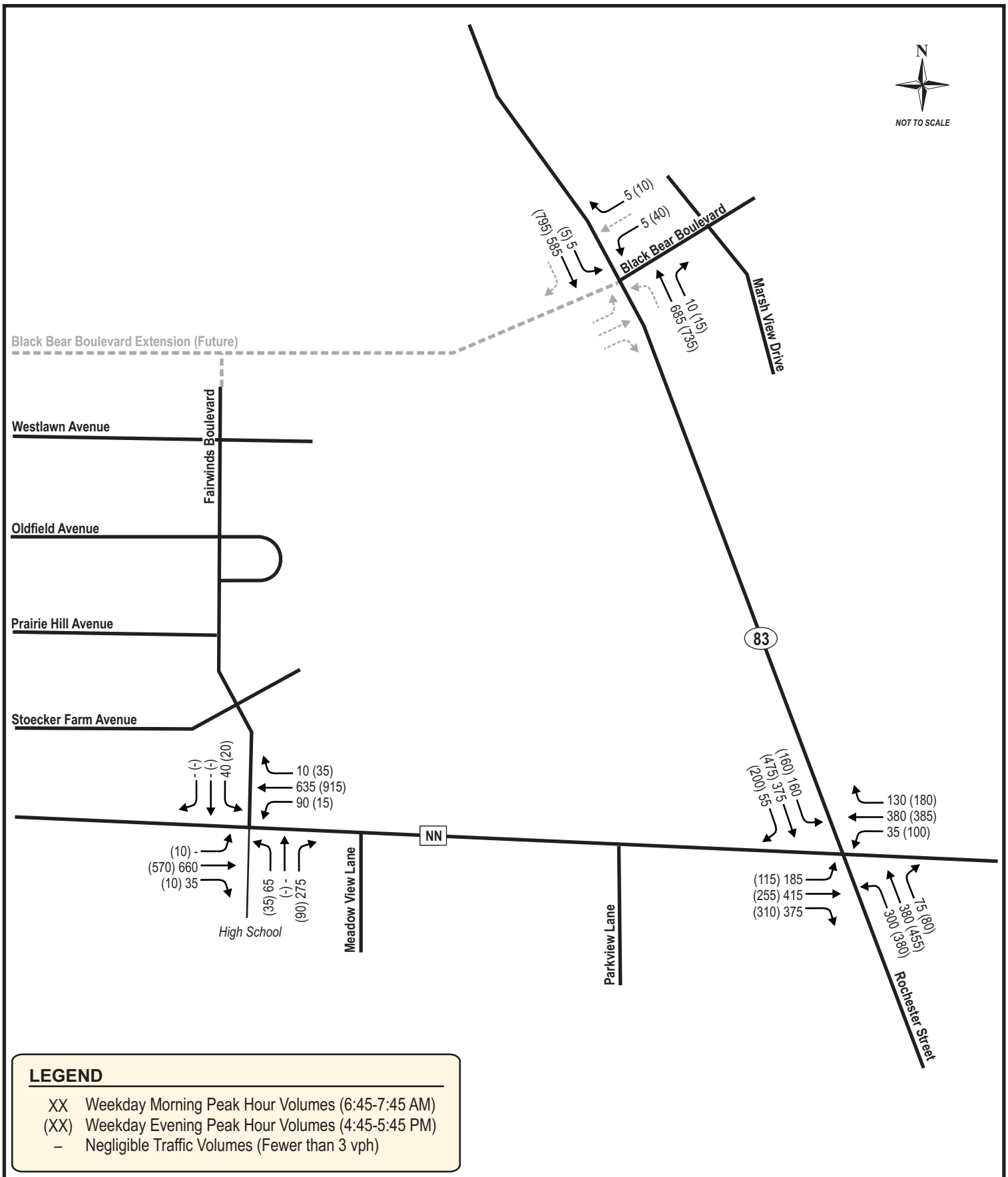

TADI
TRAFFIC ANALYSIS & DESIGN, INC.
1844: 11-11-15

EXHIBIT 4-2
HORIZON YEAR 2026 BACKGROUND TRAFFIC VOLUMES

Chapman Site - Initial Buildout
Trip Generation Table

Land Use	ITE Code	Proposed Size	Weekday Daily	AM Peak In	AM Peak Out	AM Peak Total	PM Peak In	PM Peak Out	PM Peak Total
(A) Shopping Center	820	35,000 SF	1,490 (42.70)	20 (62%)	15 (38%)	35 (0.96)	60 (48%)	70 (52%)	130 (3.71)
(C) Apartment	220	184 Units	1,220 (6.65)	20 (20%)	75 (80%)	95 (0.51)	75 (65%)	40 (35%)	115 (0.62)
Total Trips			**2,710**	**40**	**90**	**130**	**135**	**110**	**245**
Minus Linked Trips	*(820)*	*10%*	*150*	*0*	*0*	*0*	*5*	*5*	*10*
Total Driveway Trips			**2,560**	**40**	**90**	**130**	**130**	**105**	**235**

Notes

Trip rate source: ITE Trip Generation Manual, 9th Edition

Chapman Site - Full Buildout
Trip Generation Table

Land Use	ITE Code	Proposed Size	Weekday Daily	AM Peak In	AM Peak Out	AM Peak Total	PM Peak In	PM Peak Out	PM Peak Total
(A) Shopping Center	820	35,000 SF	1,490 (42.70)	20 (62%)	15 (38%)	35 (0.96)	60 (48%)	70 (52%)	130 (3.71)
(B) Office	710	36,600 SF	400 (11.03)	50 (88%)	5 (12%)	55 (1.56)	10 (17%)	45 (83%)	55 (1.49)
(C) Apartment	220	410 Units	2,730 (6.65)	40 (20%)	170 (80%)	210 (0.51)	165 (65%)	90 (35%)	255 (0.62)
(D) Single Family Residential	210	50 Units	480 (9.52)	10 (25%)	30 (75%)	40 (0.75)	30 (63%)	20 (37%)	50 (1.00)
(E) Rental Townhouse	224	30 Units	170 (5.81)	5 (33%)	15 (67%)	20 (0.70)	10 (51%)	10 (49%)	20 (0.72)
(F) Office	710	40,900 SF	450 (11.03)	55 (88%)	10 (12%)	65 (1.56)	10 (17%)	50 (83%)	60 (1.49)
Total Trips			**5,720**	**180**	**245**	**425**	**285**	**285**	**570**
Minus Linked Trips	*(820)*	*10%*	*150*	*0*	*0*	*0*	*5*	*5*	*10*
Total Driveway Trips			**5,570**	**180**	**245**	**425**	**280**	**280**	**560**

Notes

Trip rate source: ITE Trip Generation Manual, 9th Edition

ITE does not provide weekday trip rates for LU#224 (Rental Townhouse). Weekday trip rates from LU#230 (Residential Condominium/Townhouse) were used in its place.

Off-Site Development (Simon Development - Remaining Buildout)
Trip Generation Table

Land Use	ITE Code	Proposed Size	Weekday Daily	AM Peak In	AM Peak Out	AM Peak Total	PM Peak In	PM Peak Out	PM Peak Total
Gas Station/Convenience Store/Car Wash (Kwik Trip)	946	27 Fuel Positions	4,130 (152.84)	165 (51%)	155 (49%)	320 (11.84)	190 (51%)	185 (49%)	375 (13.86)
Condominium/Townhomes	230	20 Units	120 (5.81)	0 (17%)	10 (83%)	10 (0.44)	5 (67%)	5 (33%)	10 (0.52)
Quick Lubrication Vehicle Shop (Fast Track)	941	4 Service Positions	160 (40.00)	5 (67%)	5 (33%)	10 (3.00)	10 (55%)	10 (45%)	20 (5.19)
Coffee/Donut Shop with Drive-Through Window	937	2,200 SF	1,800 (818.58)	110 (51%)	110 (49%)	220 (100.58)	50 (50%)	45 (50%)	95 (42.80)
Office (Fast Track)	710	9 Employees	30 (3.32)	5 (88%)	0 (12%)	5 (0.48)	0 (17%)	5 (83%)	5 (0.46)
Total Trips			**6,240**	**285**	**280**	**565**	**255**	**250**	**505**
Minus Linked Trips	*(946)*	*10%*	*410*	*15*	*15*	*30*	*20*	*20*	*40*
Minus Linked Trips	*(941)*	*40%*	*60*	*0*	*0*	*0*	*5*	*5*	*10*
Minus Linked Trips	*(937)*	*10%*	*180*	*10*	*10*	*20*	*5*	*5*	*10*
Total Linked Trips (Minus)			**650**	**25**	**25**	**50**	**30**	**30**	**60**
Total Driveway Trips			**5,590**	**260**	**255**	**515**	**225**	**220**	**445**
Minus Pass-by Trips	*(946)*	*55%*	*2,050*	*75*	*75*	*150*	*90*	*90*	*180*
Minus Pass-by Trips	*(937)*	*10%*	*160*	*10*	*10*	*20*	*5*	*5*	*10*
Total Pass-by Trips (Minus)			**2,210**	**85**	**85**	**170**	**95**	**95**	**190**
Total New Trips			**3,380**	**175**	**170**	**345**	**130**	**125**	**255**

Notes

Pass-by trips were adjusted (shown in RED) so that in/out trips were equal. Pass-by trips are less than or equal to 10% of the directional volumes on STH 83.

Since the quick lube shop will be connected to the coffee shop, it is assumed that a high percentage of quick lube customers will wait at the coffee shop while their car is being serviced.

Trip rate source: ITE Trip Generation Manual, 9th Edition

TADI
TRAFFIC ANALYSIS & DESIGN, INC.
1844: 11-11-15

EXHIBIT 4-3B
OFF-SITE DEVELOPMENT TRIP GENERATION TABLE

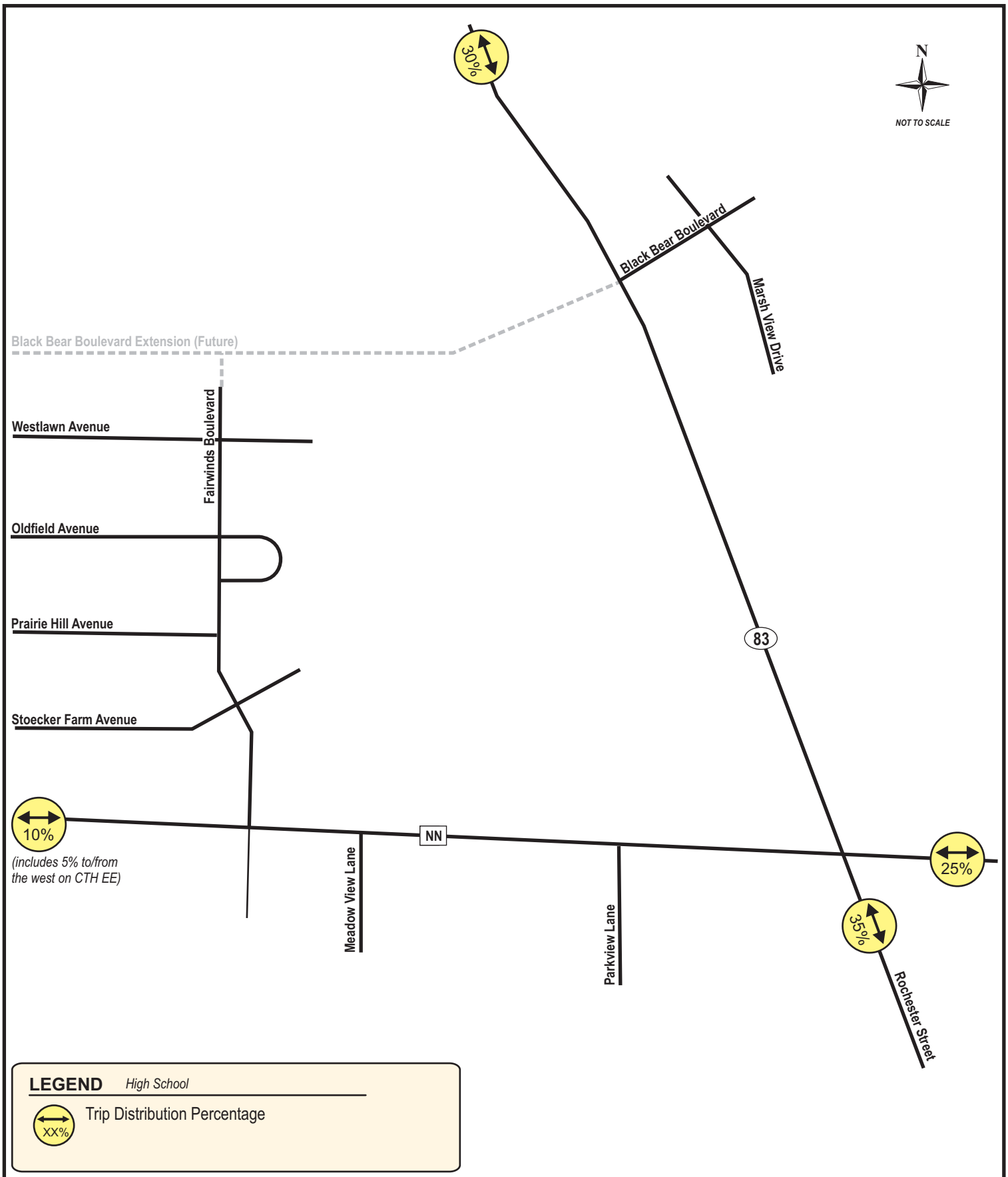

TADI
TRAFFIC ANALYSIS & DESIGN, INC.
1844: 11-11-15

EXHIBIT 4-4
TRIP DISTRIBUTION

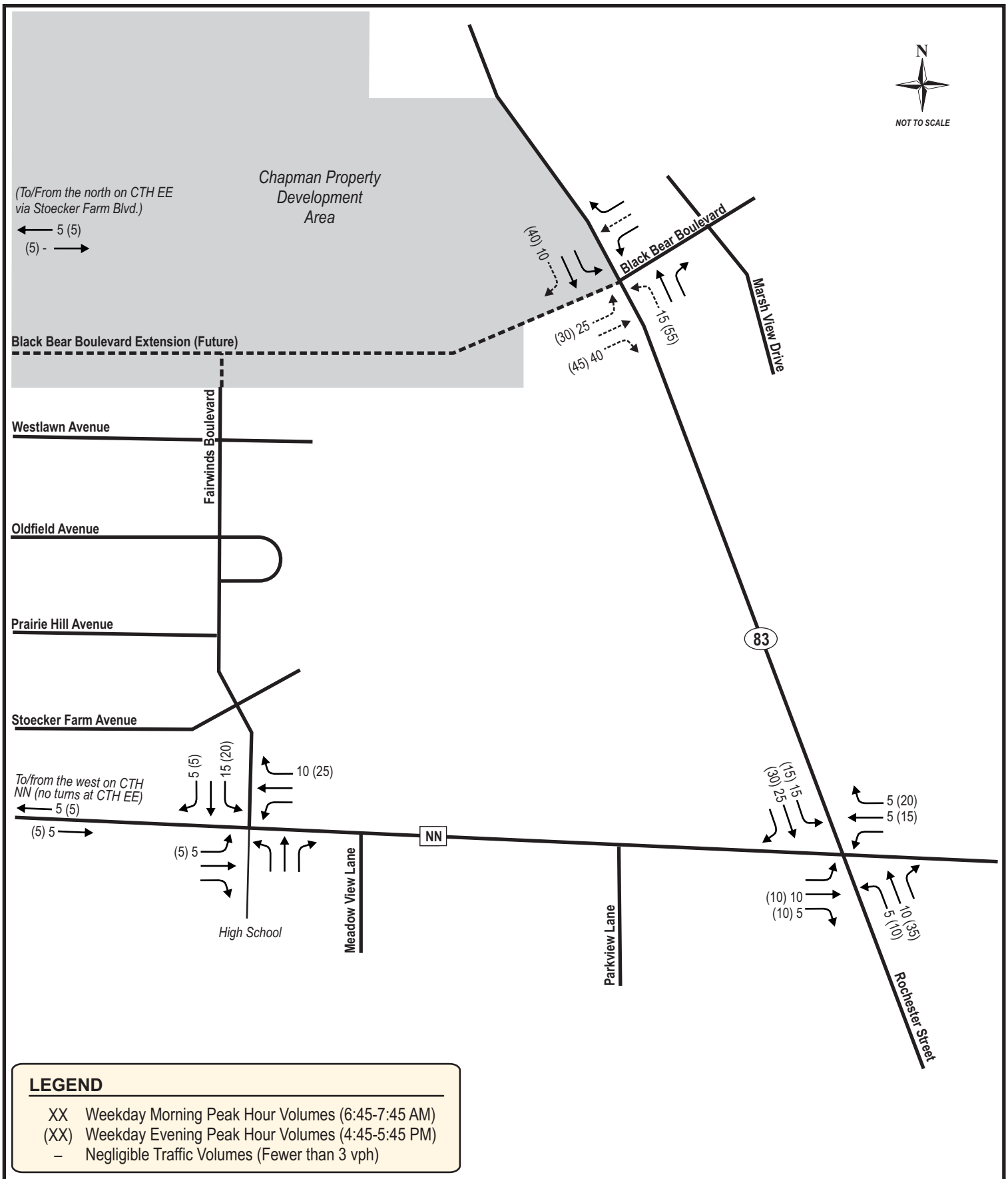

LEGEND

XX	Weekday Morning Peak Hour Volumes (6:45-7:45 AM)
(XX)	Weekday Evening Peak Hour Volumes (4:45-5:45 PM)
–	Negligible Traffic Volumes (Fewer than 3 vph)

TADI
TRAFFIC ANALYSIS & DESIGN, INC.
1844: 11-11-15

EXHIBIT 4-5A
BASE YEAR 2016 ON-SITE DEVELOPMENT TRAFFIC ASSIGNMENT
NEW TRIPS - INITIAL BUILDOUT

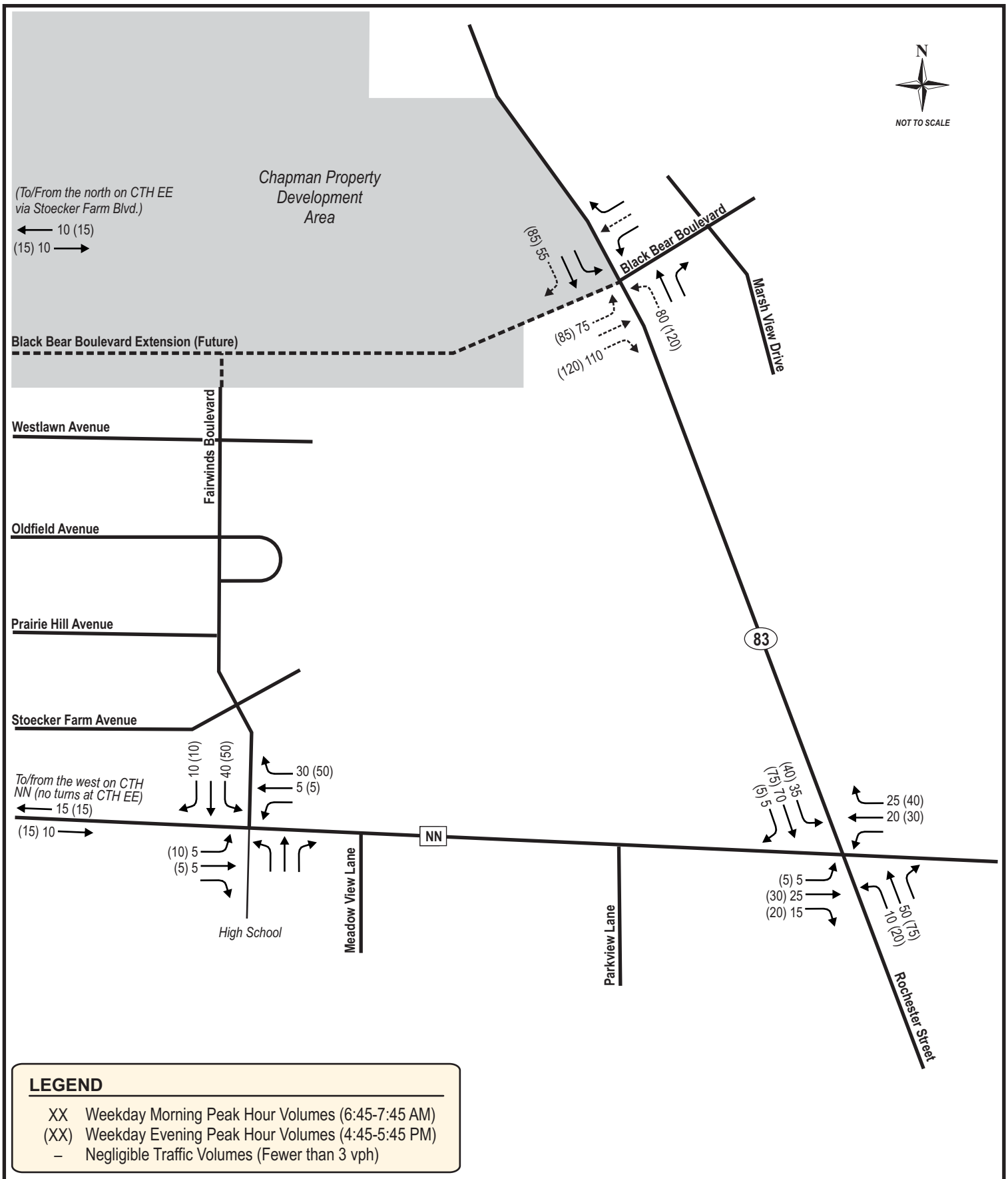

LEGEND

XX	Weekday Morning Peak Hour Volumes (6:45-7:45 AM)
(XX)	Weekday Evening Peak Hour Volumes (4:45-5:45 PM)
–	Negligible Traffic Volumes (Fewer than 3 vph)

TADI
TRAFFIC ANALYSIS & DESIGN, INC.
1844: 11-11-15

EXHIBIT 4-7A
HORIZON YEAR 2026 ON-SITE DEVELOPMENT TRAFFIC ASSIGNMENT
NEW TRIPS - FULL BUILDOUT

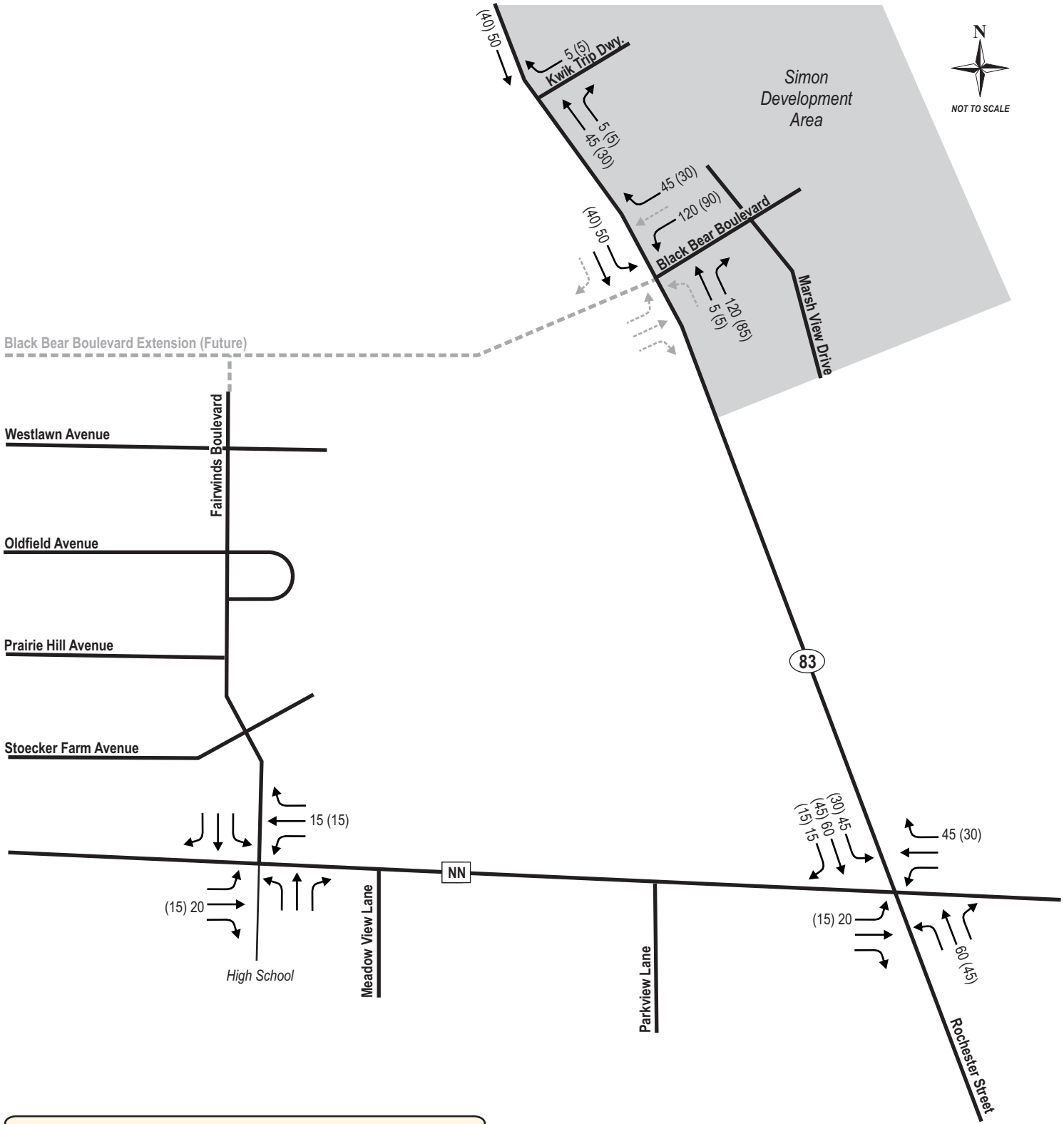

LEGEND

XX	Weekday Morning Peak Hour Volumes (6:45-7:45 AM)
(XX)	Weekday Evening Peak Hour Volumes (4:45-5:45 PM)
–	Negligible Traffic Volumes (Fewer than 3 vph)

TADI
TRAFFIC ANALYSIS & DESIGN, INC.
1844: 11-11-15

EXHIBIT 4-8A
BASE YEAR 2016 OFF-SITE DEVELOPMENT TRAFFIC ASSIGNMENT
NEW TRIPS

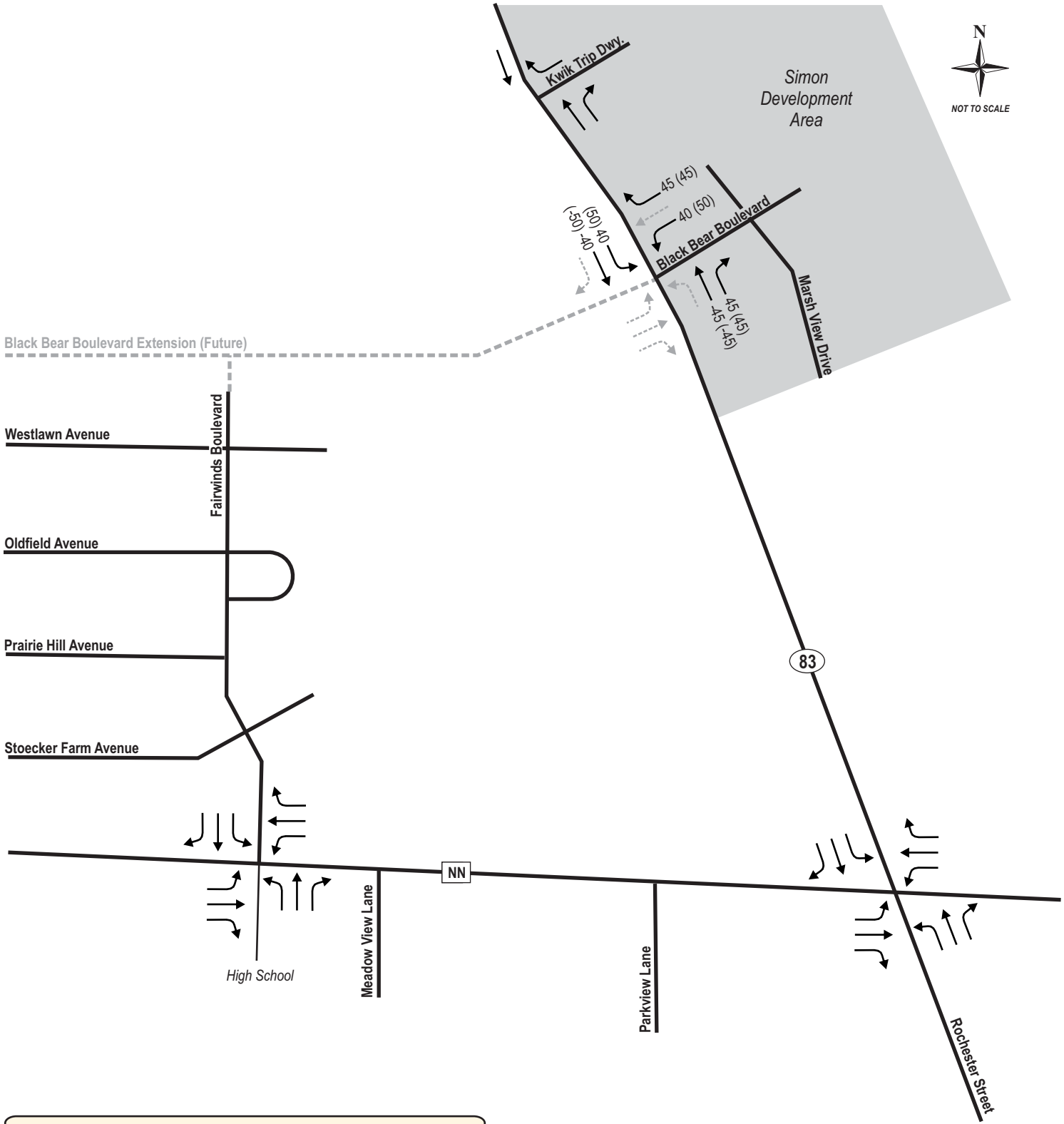

LEGEND

XX	Weekday Morning Peak Hour Volumes (6:45-7:45 AM)
(XX)	Weekday Evening Peak Hour Volumes (4:45-5:45 PM)
–	Negligible Traffic Volumes (Fewer than 3 vph)

TADI
TRAFFIC ANALYSIS & DESIGN, INC.
1844: 11-11-15

EXHIBIT 4-8C
BASE YEAR 2016 OFF-SITE DEVELOPMENT TRAFFIC ASSIGNMENT
PASS-BY TRIPS

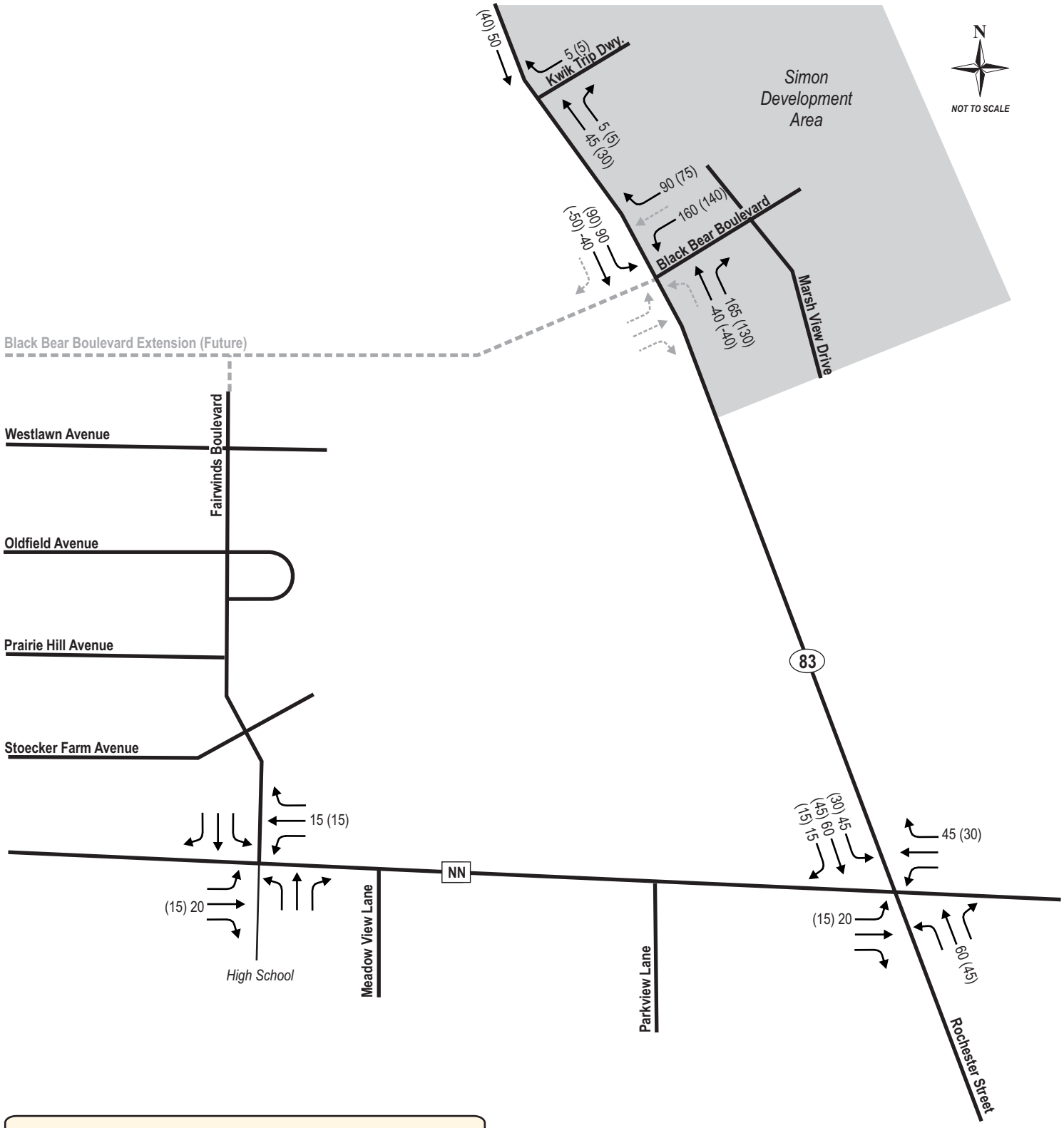

LEGEND

XX	Weekday Morning Peak Hour Volumes (6:45-7:45 AM)
(XX)	Weekday Evening Peak Hour Volumes (4:45-5:45 PM)
–	Negligible Traffic Volumes (Fewer than 3 vph)

TADI
TRAFFIC ANALYSIS & DESIGN, INC.
1844: 11-11-15

EXHIBIT 4-8D
BASE YEAR 2016 OFF-SITE DEVELOPMENT TRAFFIC ASSIGNMENT
DRIVEWAY TRIPS

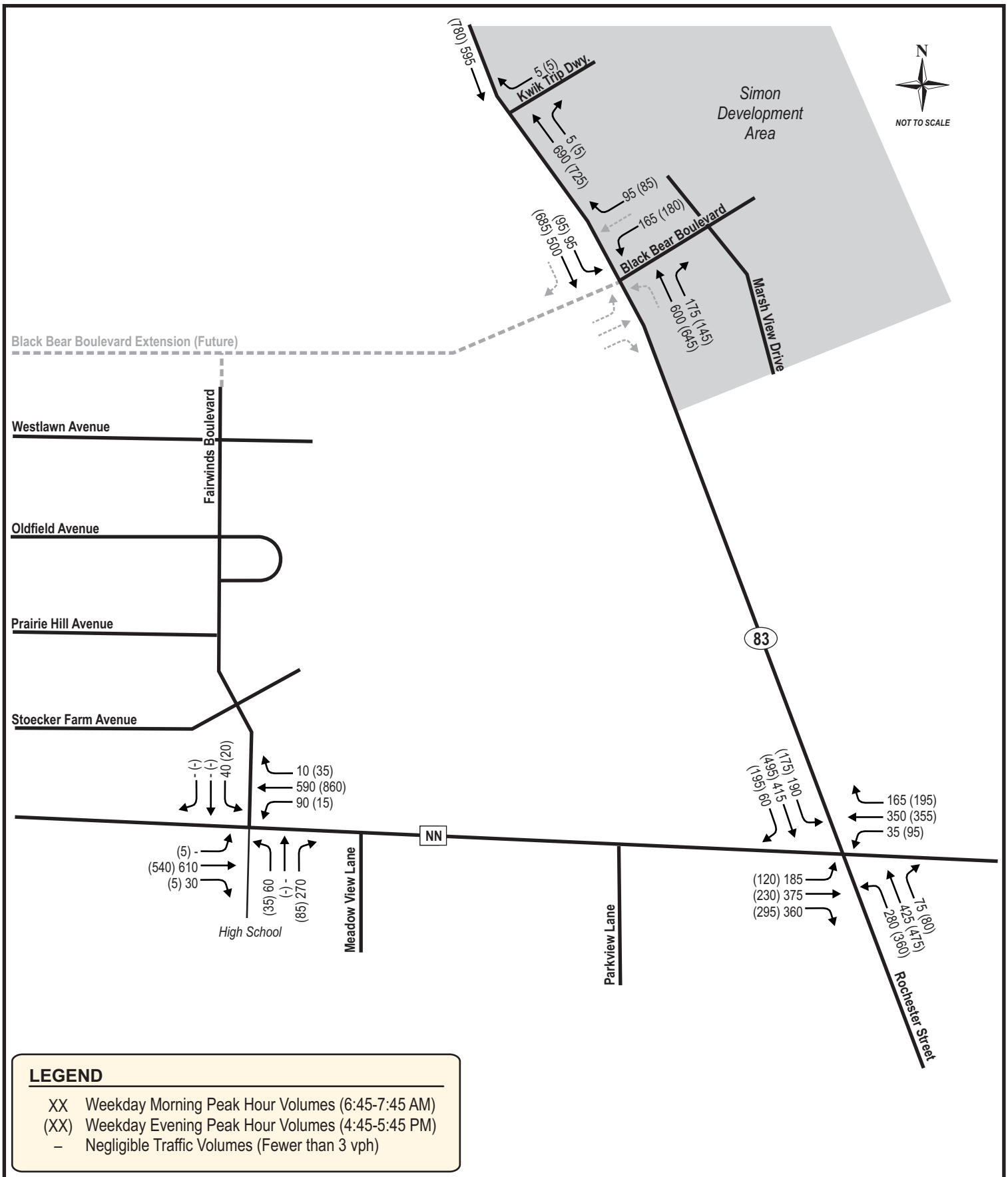

LEGEND

XX	Weekday Morning Peak Hour Volumes (6:45-7:45 AM)
(XX)	Weekday Evening Peak Hour Volumes (4:45-5:45 PM)
–	Negligible Traffic Volumes (Fewer than 3 vph)

TADI
TRAFFIC ANALYSIS & DESIGN, INC.
1844: 11-11-15

EXHIBIT 4-11
BASE YEAR 2016 BUILD DEVELOPMENT TRAFFIC VOLUMES

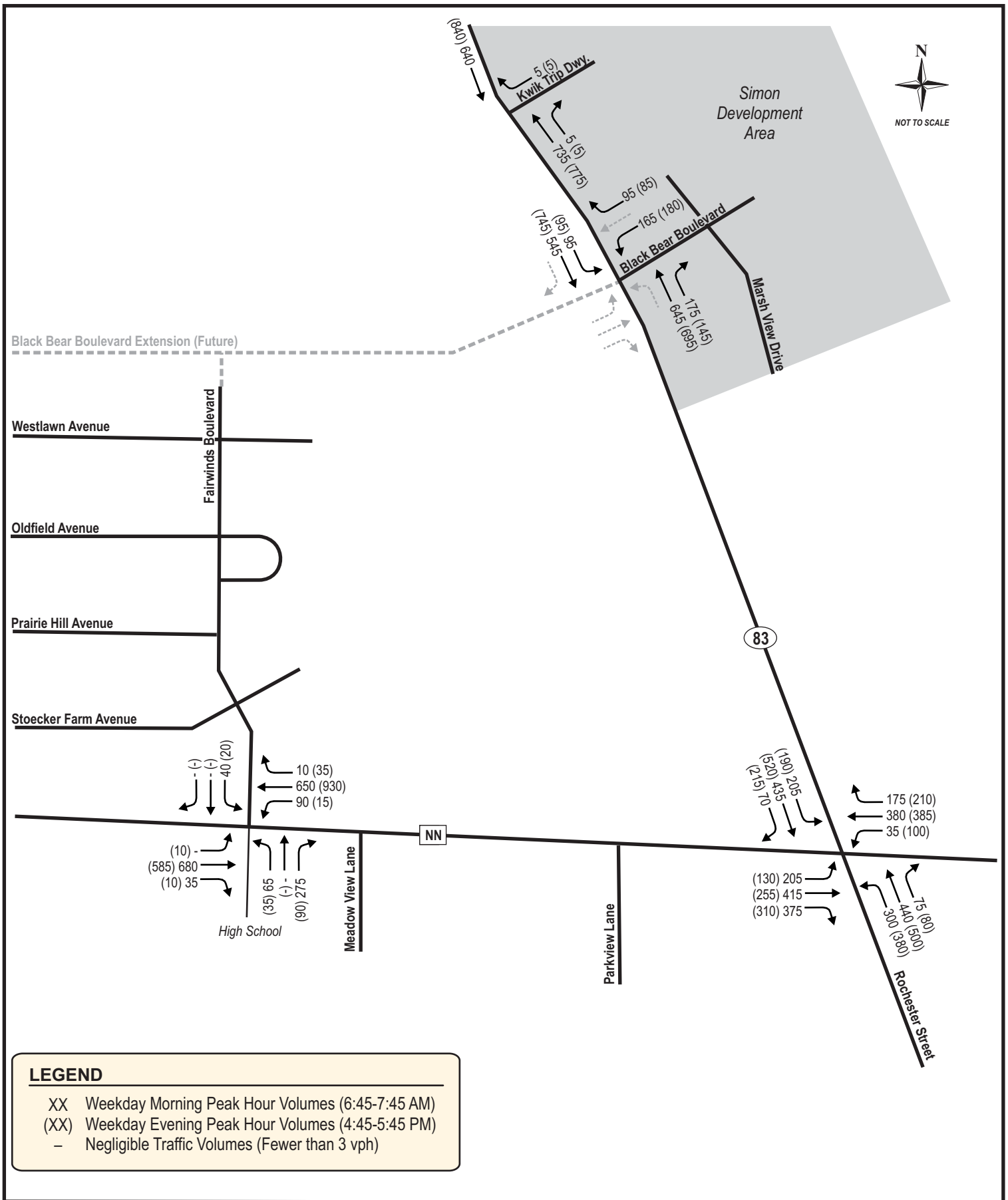

LEGEND

XX	Weekday Morning Peak Hour Volumes (6:45-7:45 AM)
(XX)	Weekday Evening Peak Hour Volumes (4:45-5:45 PM)
–	Negligible Traffic Volumes (Fewer than 3 vph)

TADI
TRAFFIC ANALYSIS & DESIGN, INC.
1844: 11-11-15

EXHIBIT 4-13
HORIZON YEAR 2026 BUILD DEVELOPMENT TRAFFIC VOLUMES

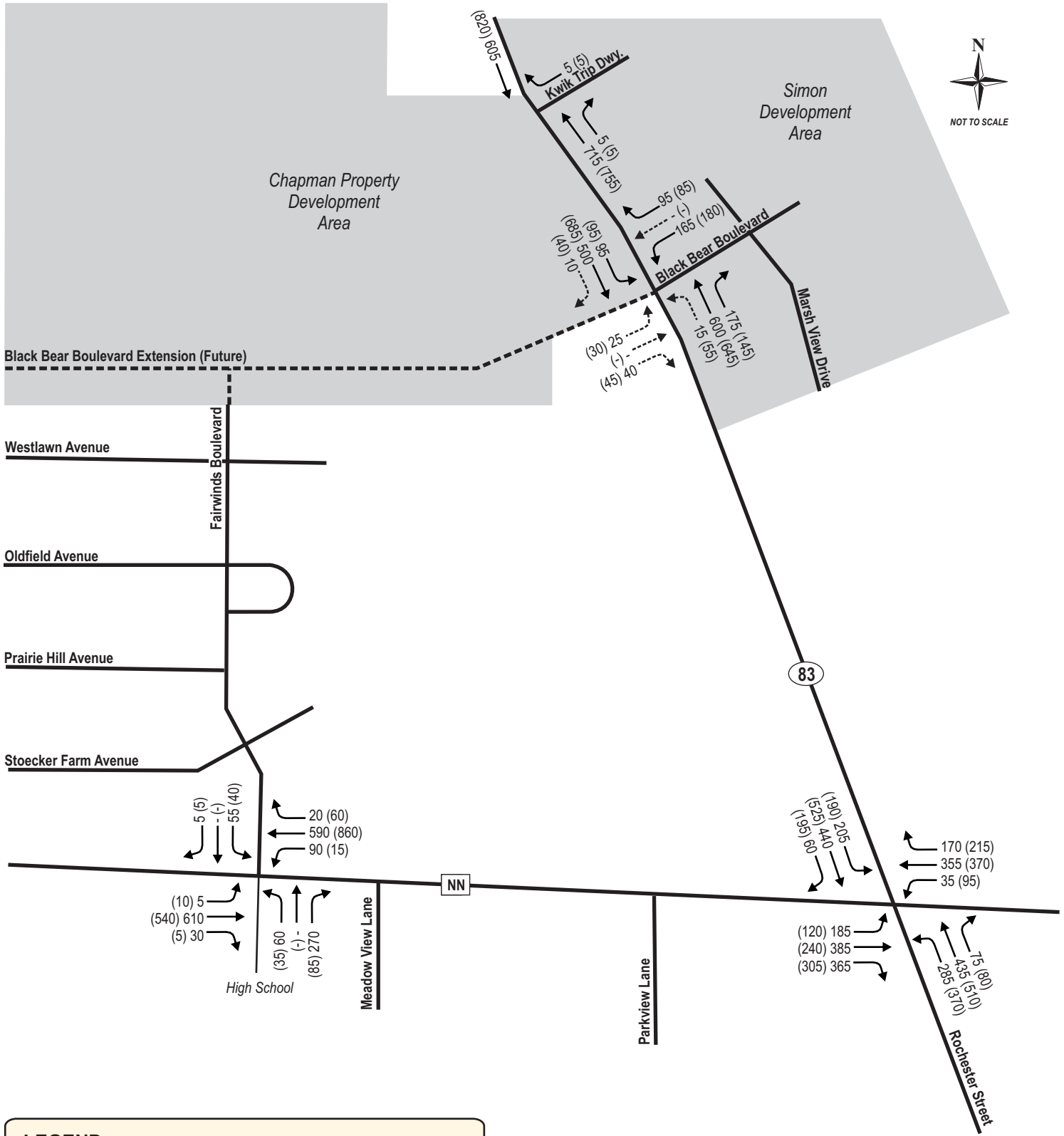

LEGEND

XX	Weekday Morning Peak Hour Volumes (6:45-7:45 AM)
(XX)	Weekday Evening Peak Hour Volumes (4:45-5:45 PM)
–	Negligible Traffic Volumes (Fewer than 3 vph)

TADI
TRAFFIC ANALYSIS & DESIGN, INC.
1844: 11-11-15

EXHIBIT 4-14
BASE YEAR 2016 TOTAL DEVELOPMENT TRAFFIC VOLUMES

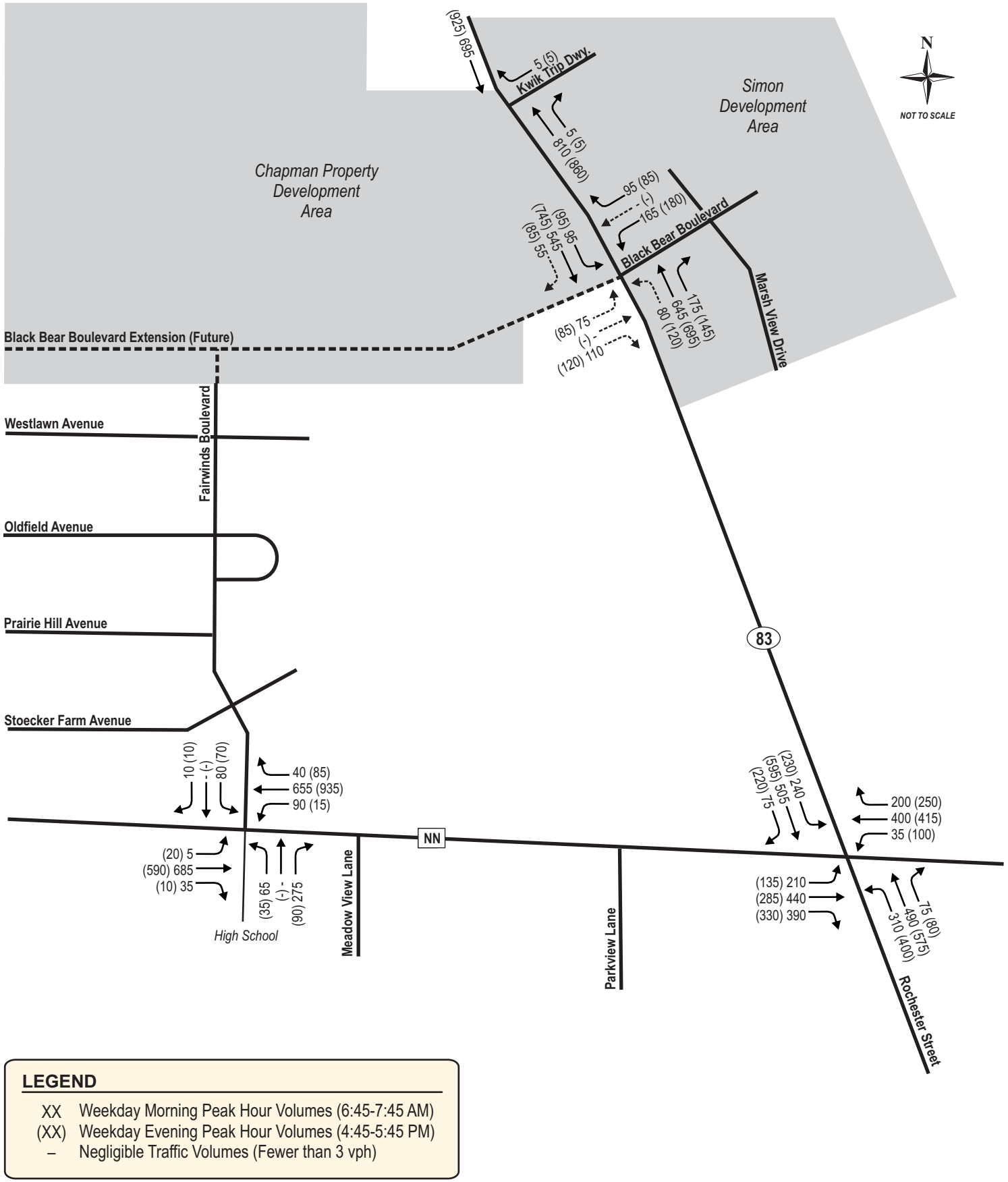

LEGEND

XX	Weekday Morning Peak Hour Volumes (6:45-7:45 AM)
(XX)	Weekday Evening Peak Hour Volumes (4:45-5:45 PM)
–	Negligible Traffic Volumes (Fewer than 3 vph)

TADI
TRAFFIC ANALYSIS & DESIGN, INC.
1844: 11-11-15

EXHIBIT 4-16
HORIZON YEAR 2026 TOTAL DEVELOPMENT TRAFFIC VOLUMES

CHAPTER 5 – TRAFFIC AND IMPROVEMENT ANALYSIS

PART A – SITE ACCESS

Black Bear Boulevard is proposed to be extended west of STH 83 through the length of the site. Extensions of residential streets Fairwinds Boulevard, Rosewood Drive, and Oldfield Avenue will provide connections between the site and CTH NN to the south and CTH EE to the west. It is expected that most of the traffic through these residential streets will be generated by the new residential developments proposed for the Chapman property. Because most of the commercial development proposed on site will be located on the east side, most of this traffic is expected to use the STH 83/Black Bear Boulevard intersection.

PART B – CAPACITY / LEVEL OF SERVICE ANALYSIS

This study evaluates the Base Year 2016 and Horizon Year 2026 traffic volumes for the Background (without on-site or off-site developments), Build (with off-site developments), and Total (with on-site and off-site developments) conditions.

B1. Horizon Year 2026 Background Traffic – Existing Transportation System

Exhibit 5-2 shows the Horizon Year 2026 Background Traffic Capacity/Level of Service table. The capacity analysis was conducted using the existing geometrics and traffic control at all study intersections. As shown, all turning movements at the study intersections are expected to continue to operate acceptably at LOS D or better during the weekday AM and PM peak hours. The traffic capacity/level of service analysis output sheets are located in Appendix B2.

B2. Base Year 2016 Build Development Traffic – Existing Transportation System

Exhibit 5-3 shows the Base Year 2016 Build Traffic Capacity/Level of Service table. The capacity analysis was conducted using the existing geometrics and traffic control at all existing study intersections. The traffic capacity/level of service analysis output sheets are located in Appendix C1.

With the Base Year 2016 Build traffic volumes (includes off-site traffic from the Simon property development, but no on-site development traffic), the southbound left-turn movement at the STH 83/CTH NN intersection is expected to operate unacceptably at LOS E during the weekday AM peak hour. All other turning movements at the study intersections are expected to operate acceptably at LOS D or better during the peak hours.

B3. Horizon Year 2026 Build Development Traffic – Existing Transportation System

Exhibit 5-5 shows the Horizon Year 2026 Build Traffic Capacity/Level of Service table for the study intersections. The capacity analysis was conducted using the existing geometrics and traffic control at all existing study intersections. The traffic capacity/level of service analysis output sheets for this analysis are located in Appendix C2.

With the Horizon Year 2026 Build traffic volumes (includes off-site traffic from the Simon property development, but no on-site development traffic), the westbound left-turn movement at the STH 83/Black Bear Boulevard intersection and the southbound left-turn movement at the STH 83/CTH NN intersection are expected to operate unacceptably at LOS E during the weekday AM peak hour. All other turning movements at the study intersections are expected to operate acceptably at LOS D or better during the peak hours.

B4. Base Year 2016 Total Development Traffic – Existing Transportation System

Exhibit 5-6 shows the Base Year 2016 Total Traffic Capacity/Level of Service table. The capacity analysis was conducted using the existing geometrics and traffic control at all existing study intersections, except at STH 83/Black Bear Boulevard. This intersection was evaluated with a new west leg approach into the Chapman property. The west approach was evaluated with a shared left-turn/through lane and separate right-turn lane, plus stop sign control. The traffic capacity/level of service analysis output sheets for this analysis are located in Appendix D1.

With the Base Year 2016 Total traffic volumes (includes off-site traffic from the Simon property development and on-site traffic from the Chapman property), the westbound left-turn/through movement at the STH 83/Black Bear Boulevard intersection is expected to operate unacceptably at LOS F during the weekday AM and PM peak hours. The southbound left-turn movement at the STH 83/CTH NN intersection is expected to continue to operate unacceptably at LOS E during the weekday AM peak hour. All other turning movements at the study intersections are expected to operate acceptably at LOS D or better during the peak hours.

B5. Horizon Year 2026 Total Development Traffic – Existing Transportation System

Exhibit 5-8 shows the Base Year 2016 Total Traffic Capacity/Level of Service table. The capacity analysis was conducted using the existing geometrics and traffic control at all existing study intersections, except at STH 83/Black Bear Boulevard. This intersection was evaluated with the same geometrics and traffic control as evaluated for the Base Year 2016 Total traffic volumes. The traffic capacity/level of service analysis output sheets for this analysis are located in Appendix D2.

With the Horizon Year 2026 Total traffic volumes (includes off-site traffic from the Simon property development and on-site traffic from the Chapman property), delays at the STH 83/Black Bear Boulevard and STH 83/CTH NN intersections are expected to increase to unacceptable levels for several additional movements during the peak hours. All turning movements at the CTH NN/Fairwinds Boulevard/School driveway intersection are expected to operate acceptably at LOS D or better during the weekday AM and PM peak hours.

B6. Base Year 2016 Build Development Traffic – Improved Transportation System

The unacceptable delay for the southbound left-turn movement at the STH 83/CTH NN intersection can be mitigated by installing a southbound flashing yellow arrow. The flashing yellow arrow will allow the southbound left-turn movement to have protected-permitted left-turn phasing instead of the existing protected-only phasing that currently opposes the northbound dual left-turn protected only phase. The Base Year 2016 Build Traffic Capacity/Level of Service table with this improvement is shown on Exhibit 5-12. The traffic capacity/level of service analysis output sheets for this improvement analysis are located in Appendix F1.

B7. Horizon Year 2026 Build Development Traffic – Improved Transportation System

The improvements evaluated for the Horizon Year 2026 Build traffic volumes include the southbound flashing yellow arrow at the STH 83/CTH NN intersection recommended for the Base Year 2016 Build traffic volumes. To mitigate the expected delays at the STH 83/Black Bear Boulevard intersection, it is recommended to install traffic signal control in place of the existing stop sign control. As discussed in Part F – Traffic Control Needs, traffic signal warrants are expected to be met at this intersection with the Horizon Year 2026 Build traffic volumes. The traffic signal would be actuated and coordinated with the traffic signal at the STH 83/CTH NN

intersection. With actuation, traffic will be progressed along STH 83 and provide gaps in traffic for more efficient turns to and from development driveways between Black Bear Boulevard and CTH NN.

To reduce traffic queueing on CTH NN at the Fairwinds Boulevard/school driveway, it is recommended that the traffic signal be coordinated with the STH83/CTH NN signal with time-of-day plans during the peak school traffic hours.

The Horizon Year 2026 Build Traffic Capacity/Level of Service table with these improvements is shown on Exhibit 5-14. The traffic capacity/level of service analysis output sheets for this improvement analysis are located in Appendix F2.

B8. Base Year 2016 Total Development Traffic – Improved Transportation System

The improvements evaluated for the Base Year 2016 Total traffic volumes include the southbound flashing yellow arrow at the STH 83/CTH NN intersection recommended for the Base Year 2016 Build traffic volumes. To mitigate the expected delays at the STH 83/Black Bear Boulevard intersection, it is recommended to install traffic signal control in place of the existing stop sign control. As discussed in Part F – Traffic Control Needs, traffic signal warrants are expected to be met at this intersection with the Base Year 2016 Total traffic volumes. The traffic signal would be actuated and coordinated with the traffic signal at the STH 83/CTH NN intersection. It is also recommended that the traffic signal be coordinated with the STH83/CTH NN signal with time-of-day plans during the peak school traffic hours.

The Base Year 2016 Total Traffic Capacity/Level of Service table with these improvements is shown on Exhibit 5-15. The traffic capacity/level of service analysis output sheets for this improvement analysis are located in Appendix G1.

B9. Horizon Year 2026 Total Development Traffic – Improved Transportation System

The improvements evaluated for the Horizon Year 2026 Total traffic volumes include the southbound flashing yellow arrow at the STH 83/CTH NN intersection, traffic signal control at the STH 83/Black Bear Boulevard intersection, and signal coordination recommended in previous traffic volume scenarios.

The Horizon Year 2026 Total Traffic Capacity/Level of Service table with these improvements is shown on Exhibit 5-17. The traffic capacity/level of service analysis output sheets for this improvement analysis are located in Appendix G2.

PART C – QUEUEING ANALYSIS

Synchro is a macroscopic model that determines queues based on a series of equations that considers volume-to-capacity for each lane group for calculation of percentile maximum queue lengths. For most studies conducted in Wisconsin, the 95th percentile queue (maximum back of queue based on the 95th percentile traffic volumes) is used for determining the adequacy or design of turn lane storage at an intersection. This provides a more conservative estimate of potential queuing at an intersection than what the user inputs for peak hour traffic flow.

For each analysis scenario, the Synchro 95th percentile traffic queues were recorded for all turn lanes at the study intersections. The 95th percentile traffic queues are shown on the following exhibits:

- Exhibit 5-18: Base Year 2016 Background Traffic Maximum Queue Lengths
- Exhibit 5-20: Horizon Year 2026 Background Traffic Maximum Queue Lengths
- Exhibit 5-21: Base Year 2016 Build Development Traffic Maximum Queue Lengths
- Exhibit 5-23: Horizon Year 2026 Build Development Traffic Maximum Queue Lengths
- Exhibit 5-24: Base Year 2016 Total Development Traffic Maximum Queue Lengths
- Exhibit 5-26: Horizon Year 2026 Total Development Traffic Maximum Queue Lengths

PART D – PEDESTRIAN, BICYCLE, AND MULTI-USE TRAIL CONSIDERATIONS

Pedestrian sidewalks and a multi-use trail are currently provided along the all sides of the STH 83/Black Bear Boulevard intersection. Pedestrian crosswalks are marked on the north, south, and east approaches to the intersection. With development of the Chapman property, it is recommended that pedestrian crosswalks be marked on the new west approach to the intersection, and that sidewalks be provided along the new segment of Black Bear Boulevard from STH 83 into the Chapman property development.

Waukesha County has indicated that pedestrian crosswalks will be implemented at the CTH NN/Fairwinds Boulevard/School driveway in the near future. It is recommended that any intersection changes, including coordination/time-of-day plans recommended in this study, consider pedestrian walk and clearance interval timings appropriate for each leg of the intersection.

Pedestrians and bicyclists may use their respective modes to access the area, though these alternate modes are expected to make up a small portion of the overall trips to/from the study area. Therefore, for the purpose of this analysis, all traffic to and from the potential development area was assumed to be by motor vehicle.

PART E – SPEED CONSIDERATION/SIGHT DISTANCE

Note that the sight distance measurements and photographs discussed in this report are based on approximate intersection placement and on-line street view photography. The party responsible for designing the intersections is responsible for cross-checking, verifying and designing for all applicable sight distances.

The proposed west approach to the STH 83/Black Bear Boulevard intersection should be designed for intersection sight distance (ISD) in accordance with the latest edition of the American Association of State Highway Transportation Officials (AASHTO) *A Policy on Geometric Design of Highways and Streets* and in accordance with the latest Facilities Development Manual (FDM) design guidelines (Procedure 11-10-5). Sight distance for the proposed west approach was conducted using a design speed of 5 mph above the posted speed limit, or 40 mph.

Based on the expected traffic operations and signal warrant analysis, the STH 83/Black Bear Boulevard intersection is recommended to have traffic signal control with full buildout of the Simon property, east of STH 83, or initial buildout of the Chapman property, west of STH 83. For signalized intersections, the sight distance should be evaluated for the permissive movements. It is assumed that the existing STH 83 and Black Bear Boulevard approaches have already been designed with the proper sight distance. Therefore, only the sight distance for the proposed west approach was evaluated in this TIA.

The permissive movements for the west approach include the northbound left-turn movement from STH 83 and the eastbound right-turn-on-red (RTOR) movement from Black Bear Boulevard.

As shown in Exhibit 5-27, the WisDOT desirable ISD is expected to be met for all vehicles making a permissive northbound left-turn from STH 83 onto the proposed west approach to Black Bear Boulevard. The desirable ISD is also expected to be met for all vehicles making a RTOR from the proposed west approach of Black Bear Boulevard. All calculations are provided in Appendix H.

PART F –TRAFFIC CONTROL NEEDS

WisDOT requires an Intersection Control Evaluation (ICE) to be completed for intersections where new traffic control, a change in traffic control, or a new intersection type is proposed. For this study, traffic signals are being recommended for the WisDOT-controlled STH 83/Black Bear Boulevard intersection. Therefore, an ICE worksheet (located in Appendix I1) was completed to evaluate the existing two-way stop control to traffic signal control and roundabout control alternatives. The ICE worksheet for this TIA evaluates parameters that include safety, operational analysis, and practical feasibility. Based on the ICE evaluation, stop sign control is expected to be the least costly (right-of-way, construction, operation & maintenance, etc.) but least efficient (LOS E/F in peak hours) traffic control option for the STH 83/Black Bear Boulevard intersection.

Roundabout control is expected to provide acceptable traffic operations during the peak hours and safe movement for pedestrians and vehicles, but requires the greatest amount of right-of-way, particularly the corners of the intersection. It is also expected to be the most costly, particularly since the STH 83/Black Bear Boulevard was recently reconstructed by WisDOT.

Traffic signal control would increase delays for northbound and southbound through traffic that currently does not have to stop at this intersection, but actuated signal timings coordinated with the adjacent traffic signal at STH 83/CTH NN would provide acceptable operating conditions with reasonable queues during the peak hours. WisDOT reserves the right to determine the preferred traffic control at this intersection, but traffic signal control is the recommended option based on the results of this study.

PART G –WARRANT ANALYSIS

A traffic signal warrant analysis was conducted for the STH 83/Black Bear Boulevard intersection to determine if signals would be warranted with the build and/or total traffic volumes. The warrant study was based on traffic volume warrants from the 2009 *Manual on Uniform Traffic Control Devices* (MUTCD). Chapter 4C of the MUTCD outlines the standards for determining the need for traffic signals at a particular location. For a traffic signal to be installed, at least one of the following warrants must be satisfied. The nine signal warrants are listed below:

- Warrant 1, Eight-Hour Vehicular Volume
- Warrant 2, Four-Hour Vehicular Volume
- Warrant 3, Peak Hour
- Warrant 4, Pedestrian Volume
- Warrant 5, School Crossing

- Warrant 6, Coordinated Signal System
- Warrant 7, Crash Experience
- Warrant 8, Roadway Network
- Warrant 9, Intersection Near a Grade Crossing

The signal warrant study for the STH 83/Black Bear Boulevard intersection included the following traffic volume & geometric parameters:

- 13-hour traffic count collected by TADI in June 2015
- Background traffic growth to the year 2016 based on approach growth rates included in the WisDOT traffic forecasts
- Off-site development traffic (remaining buildout of the Simon property) expected to pass through the intersection, distributed for 13 hours using WisDOT-developed distribution percentages for each on-site land use type
- Two or more lanes evaluated for the mainline, STH 83
- One lane evaluated for the minor streets of Black Bear Boulevard with zero percent right-turns included for westbound traffic and northbound traffic.
- Three-lane approach, inflated minor street volume thresholds to 150 percent (WisDOT requirement for "T" intersections on State trunklines).
- Critical approach speeds of 25 mph for Black Bear Boulevard and 35 mph for STH 83.

Based on these factors, traffic signal Warrant 1 and Warrant 2 are expected to be met with the Base Year 2016 Total traffic volumes. However, the STH 83/Black Bear Boulevard is expected to operate acceptably during the peak hours with the existing two-way stop sign control with these traffic volumes. As background traffic volumes increase, and as additional on-site development is constructed, westbound delays are expected to reach unacceptable levels. Therefore, traffic signals are recommended to be installed when the Chapman property is developed to mitigate potential future delays at the intersection. The hourly volume worksheets and WisDOT signal warrant worksheet for this intersection is located in Appendix I2.

N

NOT TO SCALE

Horizon Year 2026 Background Traffic Capacity/LOS Analysis
Existing Transportation System

Intersection	Traffic Control	Peak Hour	Level of Service per Movement by Approach											
			Eastbound			Westbound			Northbound			Southbound		
			LT	TH	RT	LT	TH	RT	LT	TH	RT	LT	TH	RT
STH 83 & Black Bear Boulevard	Stop Sign	AM	-	-	-	C	-	B	-	A	A	A	A	-
		PM	-	-	-	C	-	B	-	A	A	A	A	-
STH 83 & CTH NN	Traffic Signal	AM	C	D	C	C	C	C	D	C	C	D	C	C
		PM	C	C	C	C	C	C	C	C	B	D	C	C
CTH NN & Fairwinds Boulevard/School Drive	Traffic Signal	AM	B	C	C	B	A	A	C	C	D	D	D	D
		PM	A	A	A	A	A	A	C	C	D	C	C	C

TADI
TRAFFIC ANALYSIS & DESIGN, INC.
1844: 11-11-15

EXHIBIT 5-2
HORIZON YEAR 2026 BACKGROUND TRAFFIC CAPACITY/LOS ANALYSIS
EXISTING TRANSPORTATION SYSTEM

N

NOT TO SCALE

Base Year 2016 Build Traffic Capacity/LOS Analysis
Existing Transportation System

Intersection	Traffic Control	Peak Hour	Level of Service per Movement by Approach											
			Eastbound			Westbound			Northbound			Southbound		
			LT	TH	RT	LT	TH	RT	LT	TH	RT	LT	TH	RT
STH 83 & Black Bear Boulevard	Stop Sign	AM	-	-	-	D	-	B	-	A	A	A	A	-
		PM	-	-	-	D	-	B	-	A	A	A	A	-
STH 83 & CTH NN	Traffic Signal	AM	C	D	C	C	D	D	D	C	C	**E**	C	C
		PM	C	C	C	C	C	C	C	C	C	D	C	C
CTH NN & Fairwinds Boulevard/School Drive	Traffic Signal	AM	B	B	B	B	A	A	C	C	D	D	D	D
		PM	A	A	A	A	A	A	C	C	C	C	C	C

TADI
TRAFFIC ANALYSIS & DESIGN, INC.
1844: 11-11-15

EXHIBIT 5-3
BASE YEAR 2016 BUILD TRAFFIC CAPACITY/LOS ANALYSIS
EXISTING TRANSPORTATION SYSTEM

N

NOT TO SCALE

Horizon Year 2026 Build Traffic Capacity/LOS Analysis
Existing Transportation System

Intersection	Traffic Control	Peak Hour	Level of Service per Movement by Approach											
			Eastbound			Westbound			Northbound			Southbound		
			LT	TH	RT	LT	TH	RT	LT	TH	RT	LT	TH	RT
STH 83 & Black Bear Boulevard	Stop Sign	AM	-	-	-	**E**	-	B	-	A	A	A	A	-
		PM	-	-	-	D	-	B	-	A	A	A	A	-
STH 83 & CTH NN	Traffic Signal	AM	C	D	C	C	D	D	D	C	C	**E**	C	C
		PM	C	C	C	C	C	C	D	C	C	D	C	C
CTH NN & Fairwinds Boulevard/School Drive	Traffic Signal	AM	B	C	C	C	A	A	C	C	D	D	D	D
		PM	A	A	A	A	A	A	C	C	D	C	C	C

TADI
TRAFFIC ANALYSIS & DESIGN, INC.
1844: 11-11-15

EXHIBIT 5-5
HORIZON YEAR 2026 BUILD TRAFFIC CAPACITY/LOS ANALYSIS
EXISTING TRANSPORTATION SYSTEM

N

NOT TO SCALE

Base Year 2016 Total Traffic Capacity/LOS Analysis
Existing Transportation System

Intersection	Traffic Control	Peak Hour	Level of Service per Movement by Approach											
			Eastbound			Westbound			Northbound			Southbound		
			LT	TH	RT	LT	TH	RT	LT	TH	RT	LT	TH	RT
STH 83 & Black Bear Boulevard	Stop Sign	AM	C	C	B	**F**	**F**	B	A	A	A	A	A	A
		PM	D	D	B	**F**	**F**	B	A	A	A	A	A	A
STH 83 & CTH NN	Traffic Signal	AM	C	D	C	C	D	D	D	C	C	**E**	C	C
		PM	C	C	C	C	C	C	D	C	C	D	C	C
CTH NN & Fairwinds Boulevard/School Drive	Traffic Signal	AM	B	B	B	B	A	A	C	C	D	D	D	D
		PM	A	A	A	A	A	A	C	C	C	C	C	C

TADI
TRAFFIC ANALYSIS & DESIGN, INC.
1844: 11-11-15

EXHIBIT 5-6
BASE YEAR 2016 TOTAL TRAFFIC CAPACITY/LOS ANALYSIS
EXISTING TRANSPORTATION SYSTEM

N

NOT TO SCALE

Horizon Year 2026 Total Traffic Capacity/LOS Analysis
Existing Transportation System

Intersection	Traffic Control	Peak Hour	Level of Service per Movement by Approach											
			Eastbound			Westbound			Northbound			Southbound		
			LT	TH	RT	LT	TH	RT	LT	TH	RT	LT	TH	RT
STH 83 & Black Bear Boulevard	Stop Sign	AM	F	F	B	F	F	B	A	A	A	A	A	A
		PM	F	F	B	F	F	B	B	A	A	A	A	A
STH 83 & CTH NN	Traffic Signal	AM	D	E	C	C	E	E	E	D	C	F	D	C
		PM	C	C	C	C	D	D	D	C	C	E	C	C
CTH NN & Fairwinds Boulevard/School Drive	Traffic Signal	AM	B	C	C	C	B	B	C	C	D	D	D	D
		PM	B	A	A	A	A	A	C	C	C	D	D	D

TADI
TRAFFIC ANALYSIS & DESIGN, INC.
1844: 11-11-15

EXHIBIT 5-8
HORIZON YEAR 2026 TOTAL TRAFFIC CAPACITY/LOS ANALYSIS
EXISTING TRANSPORTATION SYSTEM

N

NOT TO SCALE

Base Year 2016 Build Traffic Capacity/LOS Analysis
Improved Transportation System

Intersection	Traffic Control	Peak Hour	Level of Service per Movement by Approach											
			Eastbound			Westbound			Northbound			Southbound		
			LT	TH	RT	LT	TH	RT	LT	TH	RT	LT	TH	RT
STH 83 & Black Bear Boulevard	Stop Sign	AM	-	-	-	D	-	B	-	A	A	A	A	-
		PM	-	-	-	D	-	B	-	A	A	A	A	-
STH 83 & CTH NN	Traffic Signal	AM	C	D	C	C	D	D	D	C	C	C	C	C
		PM	C	C	C	C	C	C	C	C	B	B	C	C
CTH NN & Fairwinds Boulevard/School Drive	Traffic Signal	AM	B	B	B	B	A	A	C	C	D	D	D	D
		PM	A	A	A	A	A	A	C	C	C	C	C	C

TADI
TRAFFIC ANALYSIS & DESIGN, INC.
1844: 11-11-15

EXHIBIT 5-12
BASE YEAR 2016 BUILD TRAFFIC CAPACITY/LOS ANALYSIS
IMPROVED TRANSPORTATION SYSTEM

N

NOT TO SCALE

Horizon Year 2026 Build Traffic Capacity/LOS Analysis
Improved Transportation System

Intersection	Traffic Control	Peak Hour	Level of Service per Movement by Approach											
			Eastbound			Westbound			Northbound			Southbound		
			LT	TH	RT	LT	TH	RT	LT	TH	RT	LT	TH	RT
STH 83 & Black Bear Boulevard	Traffic Signal	AM	-	-	-	D	-	C	-	A	A	A	A	-
		PM	-	-	-	D	-	C	-	A	A	A	A	-
	Round-about	AM	-	-	-	B	-	B	-	A	A	A	A	-
		PM	-	-	-	B	-	B	-	A	A	A	A	-
STH 83 & CTH NN	Traffic Signal	AM	C	D	C	C	D	D	D	C	C	C	C	C
		PM	C	C	C	C	D	D	D	C	B	B	C	C
CTH NN & Fairwinds Boulevard/School Drive	Traffic Signal	AM	B	C	C	C	A	A	C	C	D	D	D	D
		PM	A	A	A	A	A	A	C	C	D	C	C	C

TADI
TRAFFIC ANALYSIS & DESIGN, INC.
1844: 11-11-15

EXHIBIT 5-14
HORIZON YEAR 2026 BUILD TRAFFIC CAPACITY/LOS ANALYSIS
IMPROVED TRANSPORTATION SYSTEM

N

NOT TO SCALE

Base Year 2016 Total Traffic Capacity/LOS Analysis
Improved Transportation System

Intersection	Traffic Control	Peak Hour	Level of Service per Movement by Approach											
			Eastbound			Westbound			Northbound			Southbound		
			LT	TH	RT	LT	TH	RT	LT	TH	RT	LT	TH	RT
STH 83 & Black Bear Boulevard	Traffic Signal	AM	C	C	C	D	C	C	B	B	B	B	A	A
		PM	C	C	C	C	C	C	A	A	A	A	A	A
	Round-about	AM	A	A	A	B	B	B	A	A	A	A	A	A
		PM	A	A	A	B	B	B	A	A	A	A	A	A
STH 83 & CTH NN	Traffic Signal	AM	C	D	C	C	D	D	D	C	C	C	C	C
		PM	C	C	C	C	D	D	D	C	B	B	C	C
CTH NN & Fairwinds Boulevard/School Drive	Traffic Signal	AM	B	B	B	B	A	A	C	C	D	D	D	D
		PM	A	A	A	A	A	A	C	C	C	C	C	C

TADI
TRAFFIC ANALYSIS & DESIGN, INC.
1844: 11-11-15

EXHIBIT 5-15
BASE YEAR 2016 TOTAL TRAFFIC CAPACITY/LOS ANALYSIS
IMPROVED TRANSPORTATION SYSTEM

N

NOT TO SCALE

Horizon Year 2026 Total Traffic Capacity/LOS Analysis
Improved Transportation System

Intersection	Traffic Control	Peak Hour	Level of Service per Movement by Approach											
			Eastbound			Westbound			Northbound			Southbound		
			LT	TH	RT	LT	TH	RT	LT	TH	RT	LT	TH	RT
STH 83 & Black Bear Boulevard	Traffic Signal	AM	C	C	C	D	C	C	C	C	B	C	B	B
		PM	C	C	C	C	C	C	A	A	A	A	B	B
	Round-about	AM	B	B	B	C	C	C	A	A	A	A	A	A
		PM	B	B	B	B	B	B	A	A	A	A	B	B
STH 83 & CTH NN	Traffic Signal	AM	D	D	C	C	D	D	D	C	C	D	D	C
		PM	C	C	C	C	D	D	D	C	C	B	C	C
CTH NN & Fairwinds Boulevard/School Drive	Traffic Signal	AM	B	C	C	C	B	B	C	C	D	D	D	D
		PM	B	A	A	A	B	B	C	C	C	C	C	C

TADI
TRAFFIC ANALYSIS & DESIGN, INC.
1844: 11-11-15

EXHIBIT 5-17
HORIZON YEAR 2026 TOTAL TRAFFIC CAPACITY/LOS ANALYSIS
IMPROVED TRANSPORTATION SYSTEM

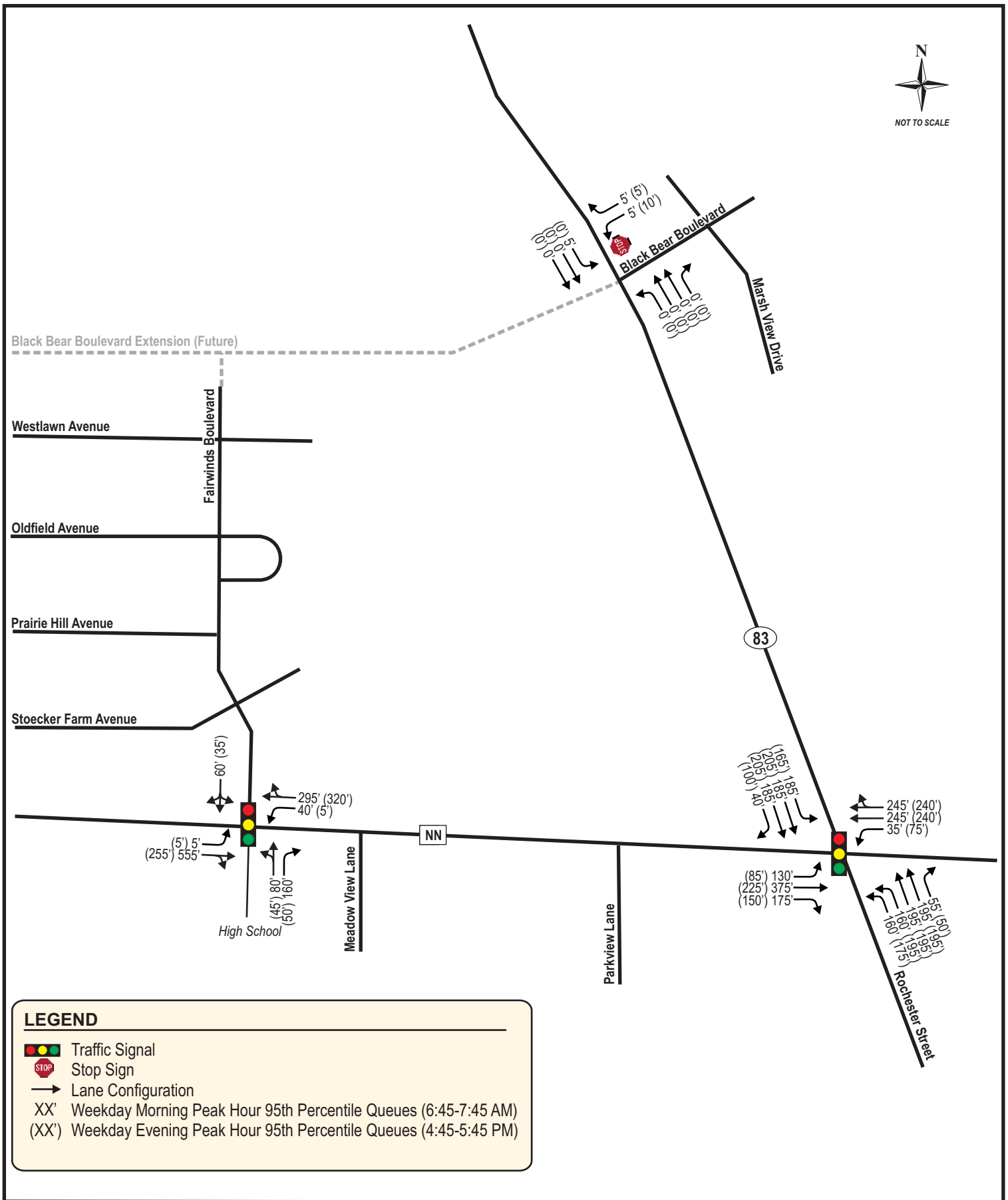

TADI
TRAFFIC ANALYSIS & DESIGN, INC.
1844: 11-11-15

EXHIBIT 5-18
BASE YEAR 2016 BACKGROUND TRAFFIC
MAXIMUM QUEUE LENGTHS

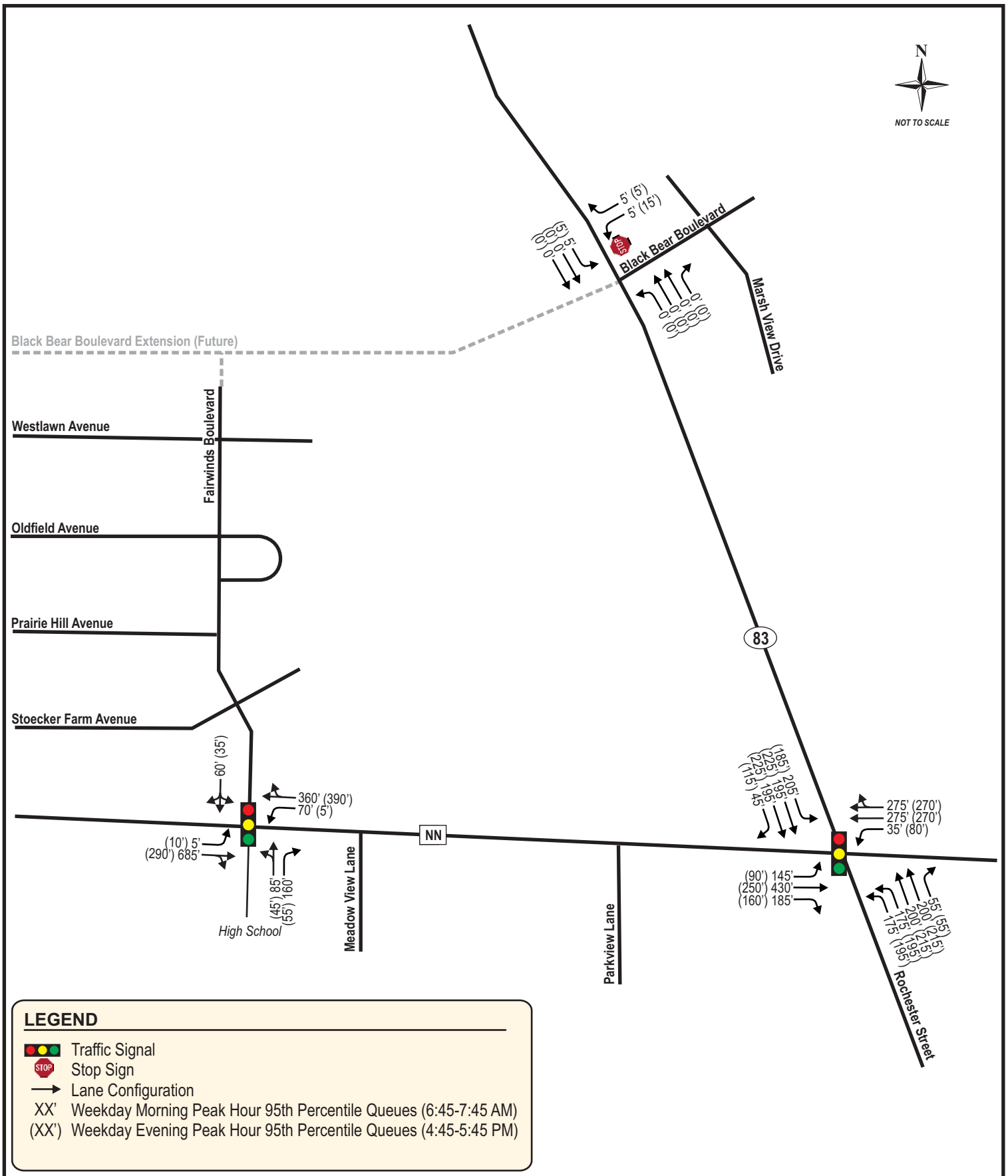

TADI
TRAFFIC ANALYSIS & DESIGN, INC.
1844: 11-11-15

EXHIBIT 5-20
HORIZON YEAR 2026 BACKGROUND TRAFFIC
MAXIMUM QUEUE LENGTHS

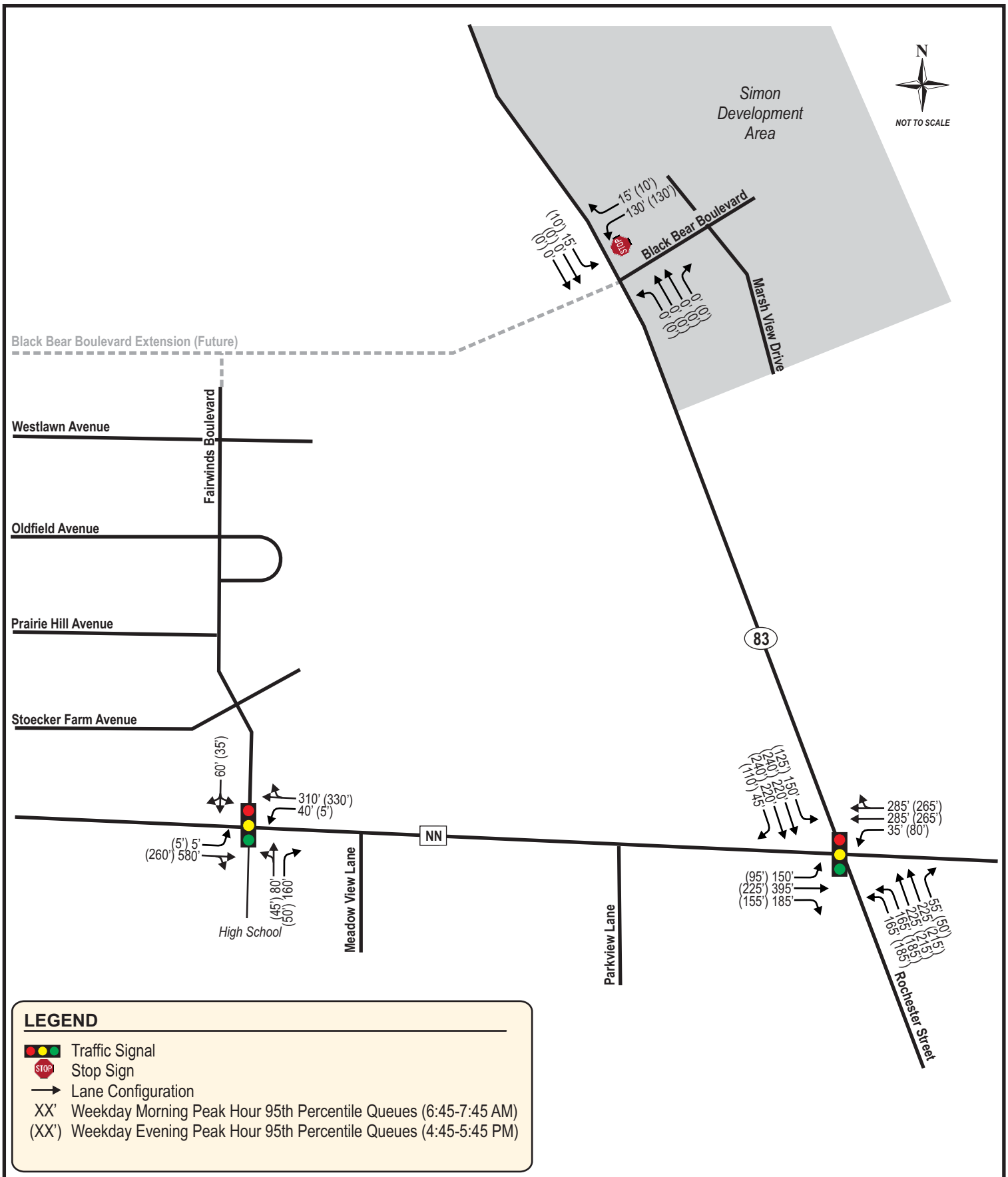

TADI
TRAFFIC ANALYSIS & DESIGN, INC.
1844: 11-11-15

EXHIBIT 5-21
BASE YEAR 2016 BUILD TRAFFIC
MAXIMUM QUEUE LENGTHS

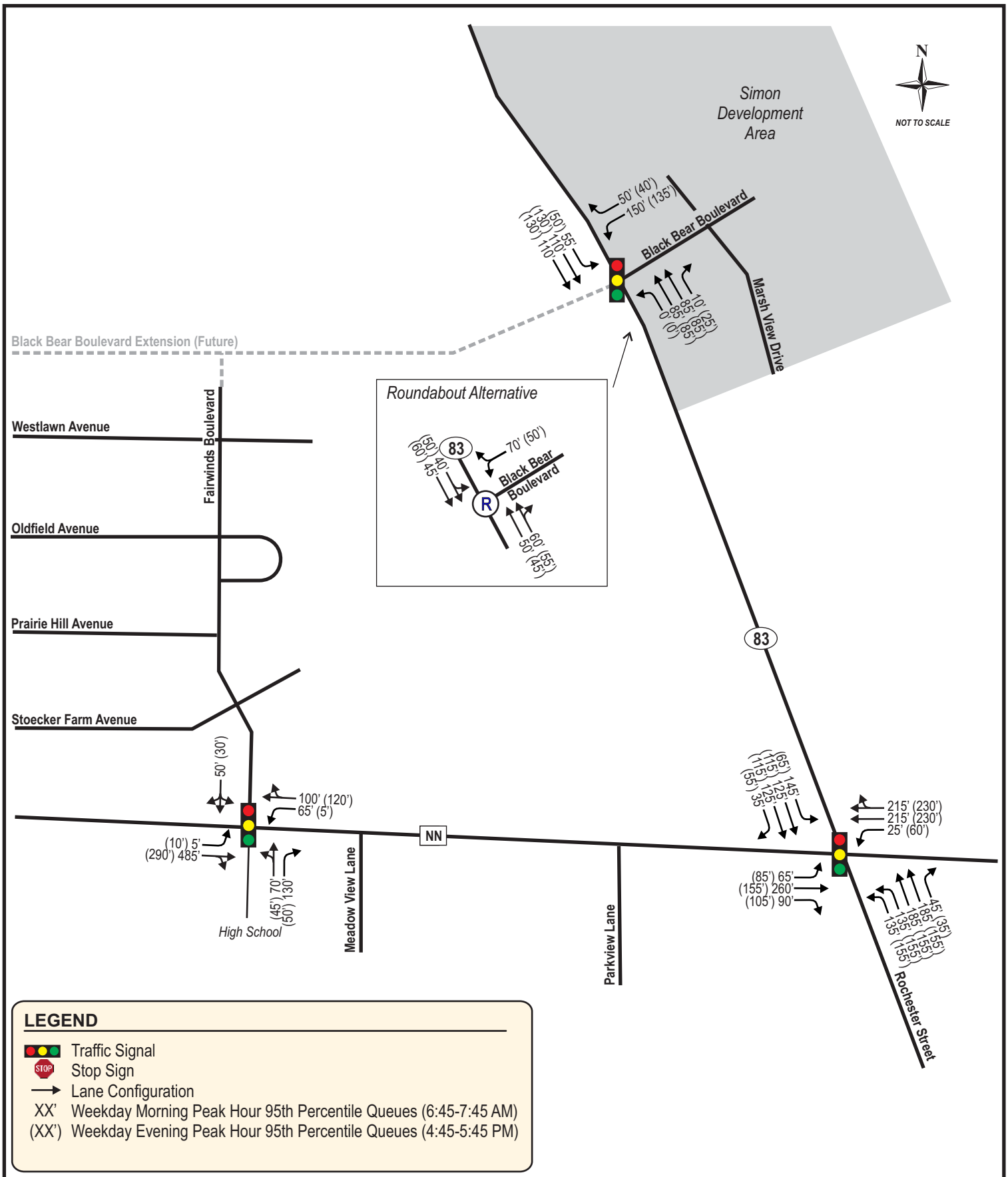

TADI
TRAFFIC ANALYSIS & DESIGN, INC.
1844: 11-11-15

EXHIBIT 5-23
HORIZON YEAR 2026 BUILD TRAFFIC
MAXIMUM QUEUE LENGTHS

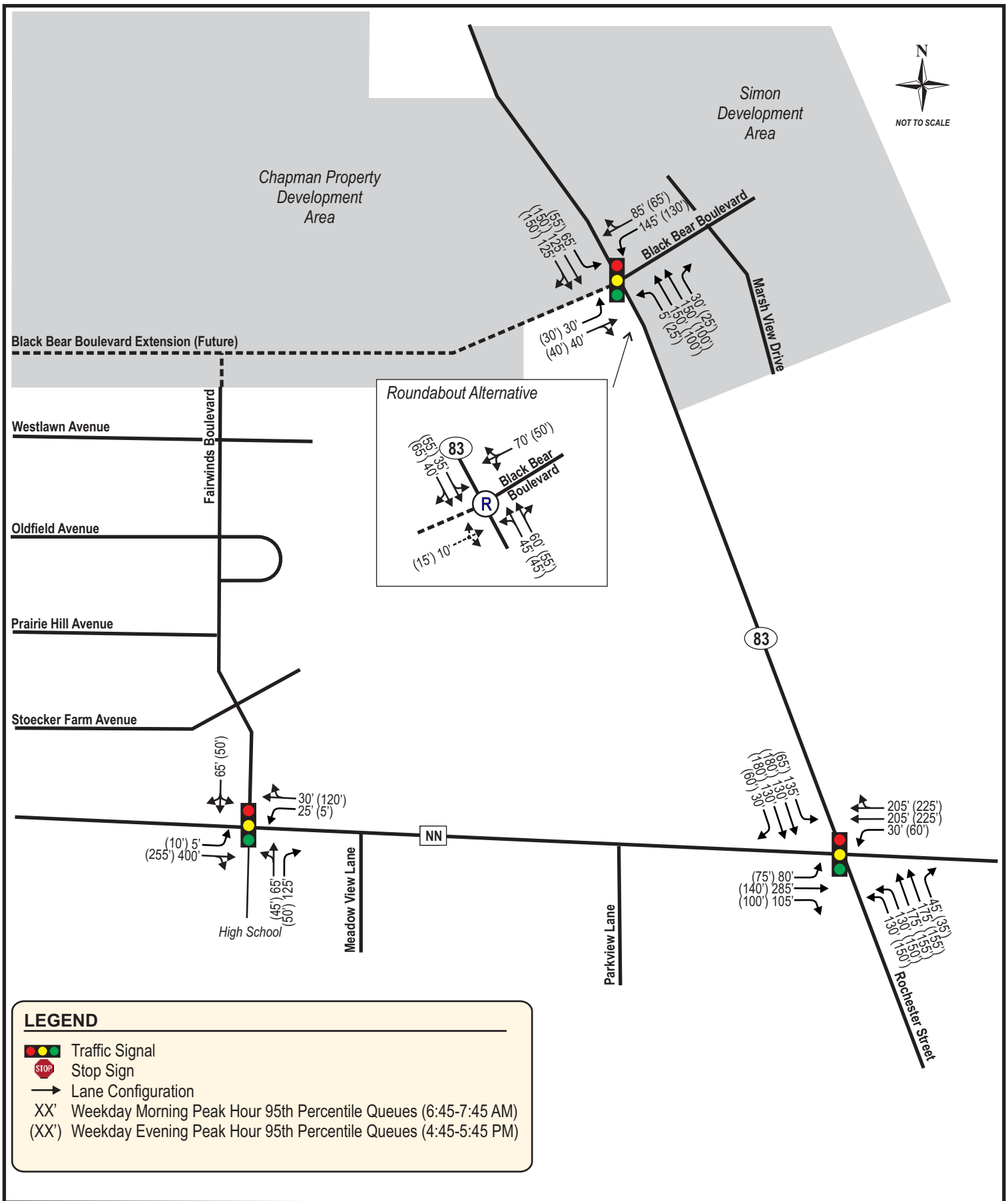

TADI
TRAFFIC ANALYSIS & DESIGN, INC.
1844: 11-11-15

EXHIBIT 5-24
BASE YEAR 2016 TOTAL TRAFFIC
MAXIMUM QUEUE LENGTHS

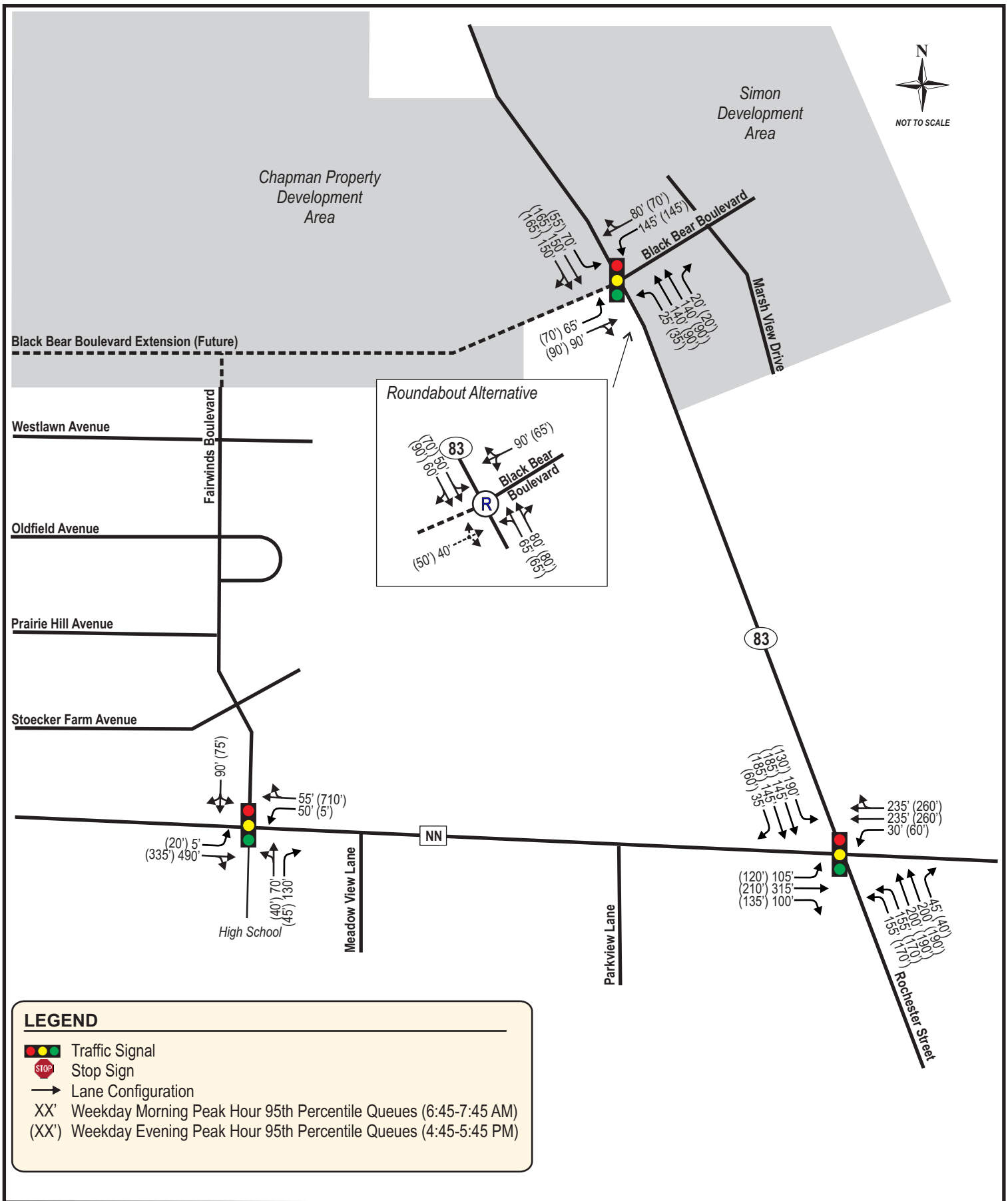

TADI
TRAFFIC ANALYSIS & DESIGN, INC.
1844: 11-11-15

EXHIBIT 5-26
HORIZON YEAR 2026 TOTAL TRAFFIC
MAXIMUM QUEUE LENGTHS

NORTHBOUND LEFT-TURN (PERMITTED LT MOVEMENT)
Photo represents a vehicle waiting in the NB LT lane on STH 83*
Desired ISD distances at 40 mph design speed:
- **Passenger Car: 500 feet**
- **Single-unit Truck: 515 feet**
- **WB Truck: 515 feet**

Actual visibility: ~965 feet from stop bar

EASTBOUND RIGHT-TURN (RTOR MOVEMENT)
Photo represents a vehicle waiting in the EB RT lane on Black Bear Boulevard
Desired ISD distances at 40 mph design speed:
- **Passenger Car: 470 feet**
- **Single-unit Truck: 590 feet**
- **WB Truck: 765 feet**

Actual visibility: ~950 feet from proposed stop bar

Note:
**Google Earth photos do not offer street views from the NB left-turn lane at this intersection. Views from the NB through lane are obstructed by signs placed in the medians that do not obstruct drivers views from the NB LT lane. Therefore, street views from the southbound lanes were used for this sight distance analysis.*

TADI
TRAFFIC ANALYSIS & DESIGN, INC.
1844: 11-11-15

EXHIBIT 5-27
SIGHT DISTANCE ANALYSIS
PROPOSED WEST APPROACH TO
STH 83/BLACK BEAR BOULEVARD INTERSECTION

CHAPTER 6 – CONCLUSIONS AND RECOMMENDATIONS

PART A – RECOMMENDATIONS

The study area intersections were analyzed based on the procedures set forth in the *2010 Highway Capacity Manual* (HCM) using Synchro 8. For the purpose of this study, LOS D was used to define acceptable peak hour operating conditions. *Note that improvements are recommended to WisDOT, Waukesha County, and the Village of Mukwonago for consideration and are not legally binding. All agencies reserve the right to determine alternative solutions.*

Based on the results of the analysis performed at the study intersections, the following improvements are recommended for the study intersections.

A1. Base Year 2016 Background Traffic

Base Year 2016 Background traffic represents the existing traffic counts at the study intersections forecasted to the year 2016. All traffic movements at the study intersections are expected to operate acceptably during the peak hours with the Base Year 2016 Background traffic volumes. Therefore, no improvements are recommended for this traffic volume scenario.

A2. Horizon Year 2026 Background Traffic

Horizon Year 2026 Background traffic represents the existing traffic counts at the study intersections forecasted to the year 2026. All traffic movements at the study intersections are expected to operate acceptably during the peak hours with the Horizon Year 2026 Background traffic volumes. Therefore, no improvements are recommended for this traffic volume scenario.

A3. Base Year 2016 Build Traffic

Base Year 2016 Build traffic volumes include the Base Year 2016 Background traffic volumes plus the additional traffic expected from the full buildout of the Simon property east of STH 83. The Base Year 2016 Build improvements are recommended as follows.

STH 83/CTH NN

- Add a flashing yellow arrow (FYA) for the southbound left-turn signal phase to allow protected/permitted left-turn movements opposing the northbound protected only phase for the dual left-turn.

A4. Horizon Year 2026 Build Traffic

Horizon Year 2026 Build traffic volumes include the Horizon Year 2026 Background traffic volumes plus the additional traffic expected from the full buildout of the Simon property east of STH 83. The Horizon Year 2026 Build improvements include the improvements recommended for the Base Year 2016 Build traffic volumes, plus the following additional improvements.

STH 83/Black Bear Boulevard

- Construct a new eastbound approach with a left-turn lane plus appropriate taper and shared through/right-turn lane.
- Restripe the westbound lanes for a continuous left-turn lane plus shared through/right-turn lane.
- Install traffic signal control with actuated two-phased signal operations and coordination with the STH 83/CTH NN signal timings. (Conceptual drawing on Exhibit 6-2).

- Roundabout control is a feasible alternative at this intersection and must be provided as an alternative option, per WisDOT. If a roundabout is selected by WisDOT, it is recommended to be a two-lane roundabout with two-lane entries for the northbound and southbound approaches, and one-lane entries for the eastbound and westbound approaches. (Conceptual drawing on Exhibit 6-3).

STH 83/CTH NN

- Add a flashing yellow arrow (FYA) for the southbound left-turn signal phase to allow protected/permitted left-turn movements opposing the northbound protected only phase for the dual left-turn.
- Coordinate the signal with the proposed traffic signal at STH 83/Black Bear Boulevard.

CTH NN/Fairwinds Boulevard/School Driveway

- Add time-of-day plans during the AM and PM school peak hours to coordinate the signal with the traffic signal operations at STH 83/CTH NN.

A5. Base Year 2016 Total Traffic

Base Year 2016 Total traffic volumes include the Base Year 2016 Build traffic volumes plus the additional traffic expected from the initial buildout of the Chapman property west of STH 83. The Base Year 2016 Total improvements are the same as those recommended for the Horizon Year 2026 Build traffic volumes.

A6. Horizon Year 2026 Total Traffic

Horizon Year 2026 Total traffic volumes include the Horizon Year 2026 Build traffic volumes plus the additional traffic expected from the full buildout of the Chapman property west of STH 83. The Horizon Year 2026 Total improvements are the same as those recommended for the Horizon Year 2026 Build and Base Year 2016 Total traffic volumes.

PART B – CONCLUSION

With the recommended improvements listed above, all study intersections are expected to operate acceptably through the horizon year 2026 with full buildout of the Simon property east of STH 83 and full buildout of the Chapman property west of STH 83.

N

NOT TO SCALE

TADI
TRAFFIC ANALYSIS & DESIGN, INC.
1844: 11-11-15

EXHIBIT 6-1
STH 83/BLACK BEAR BOULEVARD CONCEPTUAL LAYOUT
TWSC

N

NOT TO SCALE

TADI
TRAFFIC ANALYSIS & DESIGN, INC.
1844: 11-11-15

EXHIBIT 6-2
STH 83/BLACK BEAR BOULEVARD CONCEPTUAL LAYOUT
TRAFFIC SIGNAL CONTROL

N

NOT TO SCALE

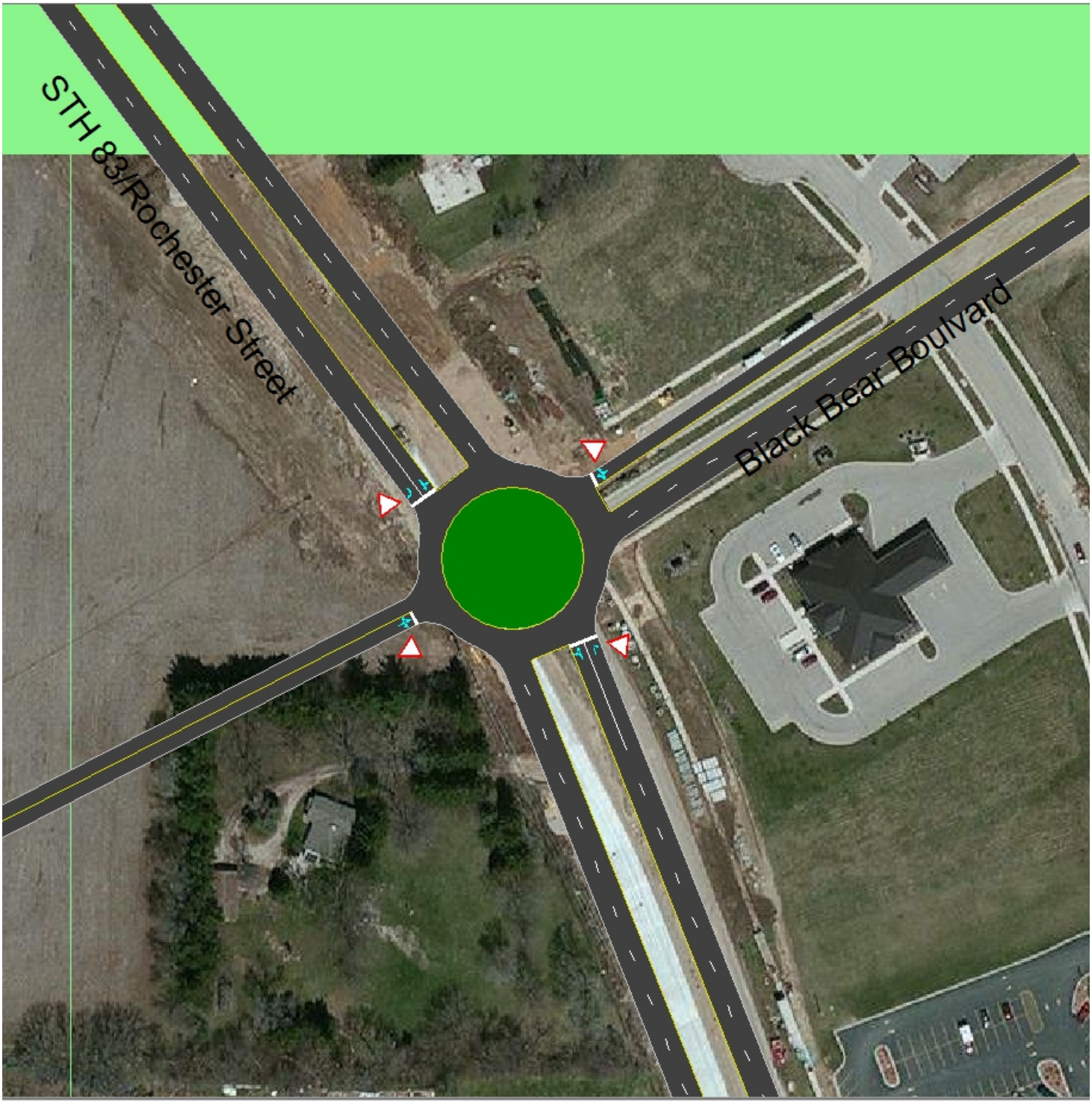

TADI
TRAFFIC ANALYSIS & DESIGN, INC.
1844: 11-11-15

EXHIBIT 6-3
STH 83/BLACK BEAR BOULEVARD CONCEPTUAL LAYOUT
ROUNDABOUT CONTROL

APPENDIX A

TRAFFIC

A1. Traffic Counts, Summary of PHF & HV%

Peak Hour Factor/Heavy Vehicle Percentage Summary

Intersection	Traffic Control	Peak Hour	Heavy Vehicle Pct.				PHF
			EB	WB	NB	SB	
STH 83 & Black Bear Boulevard	Stop Sign	AM		25%	5%	7%	0.88
		PM		2%	3%	4%	0.92
STH 83 & CTH NN	Traffic Signal	AM	5%	5%	10%	7%	0.81
		PM	3%	1%	2%	3%	0.93
CTH NN & Fairwinds Boulevard/School Drive	Traffic Signal	AM	2%	5%	12%	2%	0.72
		PM	3%	1%	0%	5%	0.91

Intersection Traffic Volume Report

Count Basics	Version 2013.J4		Page 1 of 11
Start Date:	Wednesday, October 09, 2013	Weekday	Schools in Session
Total Number of Hours Counted: 13		Non-Holiday	No Special Events

Base Information, Observed (13) Hour and Estimated (24) Hour Volume Summaries

Intersection of: STH 83 and CTH NN

Site Information

Municipality	Mukwonago		
County	Waukesha	WisDOT Region	SE
Traffic Control	Partial Stop Control		
Roadway Names		North Direction	↑
North Leg	STH 83		
East Leg	CTH NN		
South Leg	STH 83		
West Leg	CTH NN		
Special Considerations			
Schools	In Session		
Holidays	None		
Special Events	None		
Special Pedestrians Observed			
Pre-school children		None	
Elementry school age children		Many	
Visually impaired (white cane/helper dog)		None	
Elderly/disabled (except wheelchairs)		None	
Wheelchairs/electric scooters		None	
Other (describe)	None	None	

Count Information

Hrs Counted:	6:00 AM-7:00 PM				
Count Dates				Weather	
AM Peak Period	Thursday, October 10, 2013			Clear & Dry	
Midday Peak Period	Wednesday, October 09, 2013			Clear & Dry	
PM Peak Period	Thursday, October 10, 2013			Clear & Dry	
Calculated Peak Hours					
AM	6:45-7:45am	MD	11:30-12:30am	PM	4:45-5:45pm
Peak Hours Selected for Analysis					
AM	6:45-7:45am	MD	11:30-12:30am	PM	4:45-5:45pm
Daily/Seasonal Adjustment Group	(2) Urban Arterials & Collectors				
Count Expansion Group	(2) Urban Arterials & Collectors				
Daily/Seasonal Adjustment Factor	0.893	Count Expansion Factor	1.176		
Company Name	TADI			Manual Adj.	1.000
Observers	AM Peak Period	Mike Weichmann, Lee Oeetreich			
	Midday Peak Period	Ron & Pat Andryk			
	PM Peak Period	Jack & Karlyn Bieberitz			
Comments	Version 2013.J4				

Observed 13 Hour Volume Summary

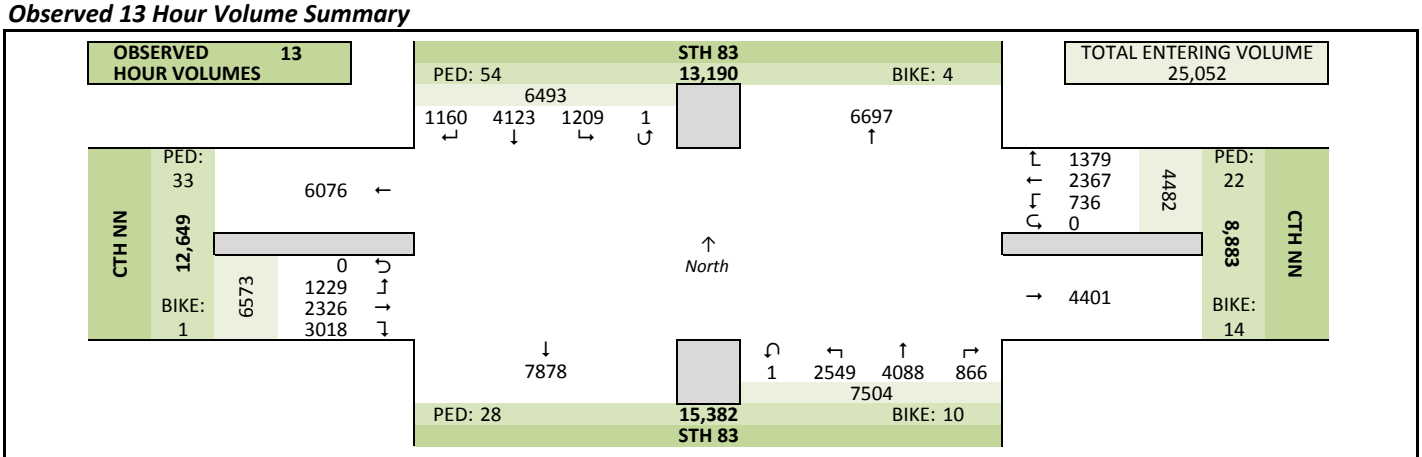

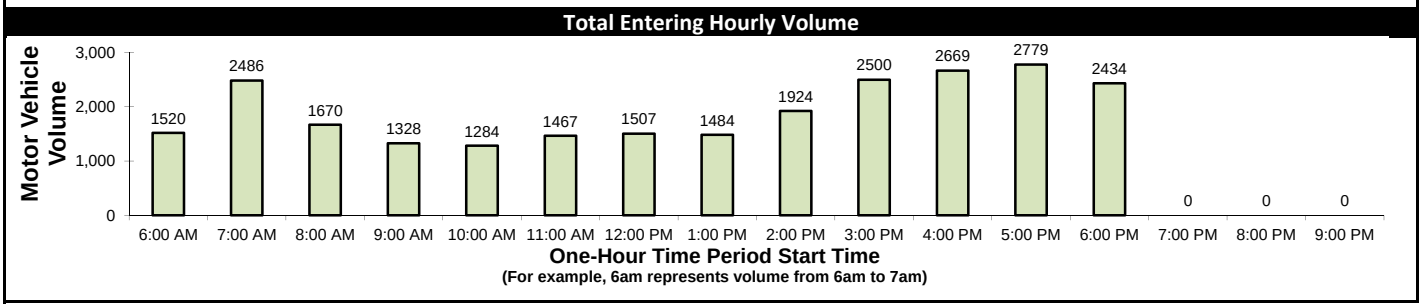

Estimated 24 Hour AADT

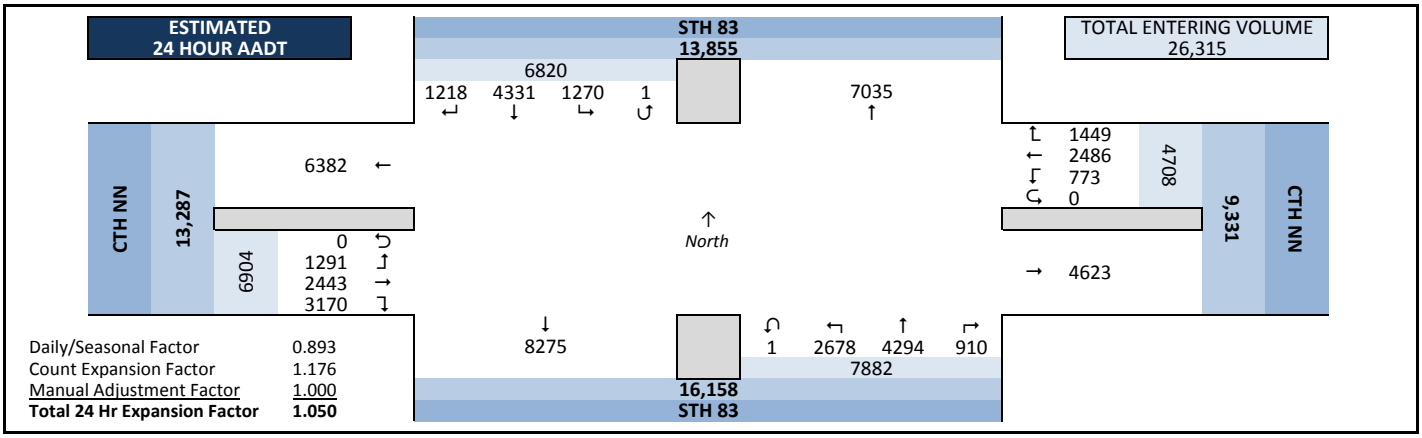

Daily/Seasonal Factor	0.893
Count Expansion Factor	1.176
Manual Adjustment Factor	1.000
Total 24 Hr Expansion Factor	**1.050**

Intersection Traffic Volume Report

Count Basics			Page 3 of 11
Start Date:	Wednesday, October 09, 2013	Weekday	Schools in Session
Total Number of Hours Counted: 13		Non-Holiday	No Special Events

Peak Hour Volume Summary

All Motor Vehicles

STH 83 and CTH NN

Peak Hour Volumes, Truck Percentages, and PHFs

Thursday, October 10, 2013		From North					From East					From South					From West					
	AM Peak Hour	STH 83					CTH NN					STH 83					CTH NN					
	Start Time	Right	Thru	Left	U-Tn	Total	Right	Thru	Left	U-Tn	Total	Right	Thru	Left	U-Tn	Total	Right	Thru	Left	U-Tn	Total	Totals
AM Peak Hour	6:45 AM	8	63	33	0	104	26	100	8	0	134	17	64	72	0	153	70	80	27	0	177	568
	7:00 AM	17	96	41	0	154	29	121	9	0	159	35	99	96	0	230	90	130	48	0	268	811
	7:15 AM	10	89	27	0	126	34	93	10	0	137	15	100	76	0	191	107	108	55	0	270	724
	7:30 AM	11	99	42	0	152	29	27	6	0	62	5	94	33	0	132	83	50	30	0	163	509
	Peak Hour Volume	46	347	143	0	536	118	341	33	0	492	72	357	277	0	706	350	368	160	0	878	2612
	Rounded Hourly Volume	45	345	145	0	535	120	340	35	0	495	70	355	275	0	700	350	370	160	0	880	2610
	% Single Unit Trucks	2.2	4.0	2.8	0.0	3.5	1.7	4.1	21.2	0.0	4.7	12.5	9.0	5.8	0.0	8.1	8.3	3.3	1.2	0.0	4.9	5.4
	% Heavy Trucks	2.2	4.0	0.7	0.0	3.0	1.7	0.3	0.0	0.0	0.6	1.4	2.0	1.1	0.0	1.6	0.9	0.3	0.0	0.0	0.5	1.3
	% Trucks (Total)	4.3	8.1	3.5	0.0	6.5	3.4	4.4	21.2	0.0	5.3	13.9	10.9	6.9	0.0	9.6	9.1	3.5	1.2	0.0	5.4	6.7
	Peak Hour Factor (PHF)	0.68	0.88	0.85	0.00	0.87	0.87	0.70	0.82	0.00	0.77	0.51	0.89	0.72	0.00	0.77	0.82	0.71	0.73	0.00	0.81	0.81

Thursday, October 10, 2013		From North					From East					From South					From West					
	MD Peak Hour	STH 83					CTH NN					STH 83					CTH NN					
	Start Time	Right	Thru	Left	U-Tn	Total	Right	Thru	Left	U-Tn	Total	Right	Thru	Left	U-Tn	Total	Right	Thru	Left	U-Tn	Total	Totals
Midday (MD) Peak Hour	11:30 AM	29	65	16	0	110	25	38	24	0	87	18	66	30	0	114	38	26	23	0	87	398
	11:45 AM	16	65	27	0	108	23	31	16	0	70	21	89	23	0	133	31	22	12	0	65	376
	12:00 PM	15	77	20	0	112	28	27	9	0	64	17	84	27	0	128	31	27	22	0	80	384
	12:15 PM	23	67	30	0	120	20	30	12	0	62	24	85	29	0	138	29	26	19	0	74	394
	Peak Hour Volume	83	274	93	0	450	96	126	61	0	283	80	324	109	0	513	129	101	76	0	306	1552
	Rounded Hourly Volume	85	275	95	0	455	95	125	60	0	280	80	325	110	0	515	130	100	75	0	305	1555
	% Single Unit Trucks	4.8	4.7	4.3	0.0	4.7	2.1	1.6	0.0	0.0	1.4	1.2	3.4	5.5	0.0	3.5	1.6	5.9	0.0	0.0	2.6	3.3
	% Heavy Trucks	2.4	4.0	2.2	0.0	3.3	1.0	1.6	0.0	0.0	1.1	0.0	3.4	2.8	0.0	2.7	3.9	1.0	2.6	0.0	2.6	2.6
	% Trucks (Total)	7.2	8.8	6.5	0.0	8.0	3.1	3.2	0.0	0.0	2.5	1.2	6.8	8.3	0.0	6.2	5.4	6.9	2.6	0.0	5.2	5.9
	Peak Hour Factor (PHF)	0.72	0.89	0.77	0.00	0.94	0.86	0.83	0.64	0.00	0.81	0.83	0.91	0.91	0.00	0.93	0.85	0.94	0.83	0.00	0.88	0.97

Thursday, October 10, 2013		From North					From East					From South					From West					
	PM Peak Hour	STH 83					CTH NN					STH 83					CTH NN					
	Start Time	Right	Thru	Left	U-Tn	Total	Right	Thru	Left	U-Tn	Total	Right	Thru	Left	U-Tn	Total	Right	Thru	Left	U-Tn	Total	Totals
PM Peak Hour	4:45 PM	42	116	43	0	201	36	81	21	0	138	25	99	82	0	206	81	65	21	0	167	712
	5:00 PM	40	103	28	0	171	42	86	23	0	151	22	119	87	0	228	56	48	26	0	130	680
	5:15 PM	52	116	46	0	214	47	80	32	0	159	11	102	95	0	208	84	67	32	0	183	764
	5:30 PM	41	107	27	0	175	35	99	18	0	152	19	104	91	0	214	68	45	22	0	135	676
	Peak Hour Volume	175	442	144	0	761	160	346	94	0	600	77	424	355	0	856	289	225	101	0	615	2832
	Rounded Hourly Volume	175	440	145	0	760	160	345	95	0	600	75	425	355	0	855	290	225	100	0	615	2830
	% Single Unit Trucks	1.7	2.9	0.7	0.0	2.2	2.5	0.9	0.0	0.0	1.2	1.3	0.7	1.1	0.0	0.9	1.4	3.1	1.0	0.0	2.0	1.6
	% Heavy Trucks	0.0	0.7	0.7	0.0	0.5	0.6	0.0	0.0	0.0	0.2	0.0	0.5	0.8	0.0	0.6	1.4	0.4	0.0	0.0	0.8	0.5
	% Trucks (Total)	1.7	3.6	1.4	0.0	2.8	3.1	0.9	0.0	0.0	1.3	1.3	1.2	2.0	0.0	1.5	2.8	3.6	1.0	0.0	2.8	2.1
	Peak Hour Factor (PHF)	0.84	0.95	0.78	0.00	0.89	0.85	0.87	0.73	0.00	0.94	0.77	0.89	0.93	0.00	0.94	0.86	0.84	0.79	0.00	0.84	0.93

Peak Hour Pedestrian and Bicyclist Volumes

Pedestrians and Bicyclists		Crossing North Approach			Crossing East Approach			Crossing South Approach			Crossing West Approach			Total Ped & Bike
		STH 83			CTH NN			STH 83			CTH NN			
	15-Minute Start Time	Pedestrian	Bicyclist	Total	Pedestrian	Bicyclist	Total	Pedestrian	Bicyclist	Total	Pedestrian	Bicyclist	Total	Volume
AM	6:45 AM	0	0	0	2	2	4	0	0	0	0	0	0	4
	7:00 AM	0	0	0	1	0	1	0	0	0	1	0	1	2
	7:15 AM	0	0	0	0	0	0	0	0	0	0	0	0	0
	7:30 AM	0	0	0	0	0	0	0	0	0	0	0	0	0
	Total	0	0	0	3	2	5	0	0	0	1	0	1	6
MD	11:30 AM	0	0	0	0	0	0	0	0	0	0	0	0	0
	11:45 AM	0	0	0	2	0	2	0	0	0	0	0	0	2
	12:00 PM	0	0	0	0	0	0	0	0	0	0	0	0	0
	12:15 PM	0	0	0	0	0	0	0	0	0	0	0	0	0
	Total	0	0	0	2	0	2	0	0	0	0	0	0	2
PM	4:45 PM	0	0	0	1	0	1	1	2	3	0	0	0	4
	5:00 PM	0	0	0	0	2	2	0	0	0	0	0	0	2
	5:15 PM	0	0	0	2	0	2	0	0	0	0	0	0	2
	5:30 PM	0	1	1	0	2	2	0	1	1	0	0	0	4
	Total	0	1	1	3	4	7	1	3	4	0	0	0	12

Intersection Traffic Volume Report

Count Basics			*Page 5 of 11*
Start Date:	Wednesday, October 09, 2013	Weekday	Schools in Session
Total Number of Hours Counted: 13		Non-Holiday	No Special Events

15-Minute Motor Vehicle Data

All Motor Vehicles

STH 83 and CTH NN

15-Minute Motor Vehicle Data

15-Minute Time Period Start Time		From North (STH 83) Right	Thru	Left	U-Tn	Total	From East (CTH NN) Right	Thru	Left	U-Tn	Total	From South (STH 83) Right	Thru	Left	U-Tn	Total	From West (CTH NN) Right	Thru	Left	U-Tn	Total	15-Min Totals	Hourly Sum	PHF
AM Peak Period	6:00 AM	2	35	7	0	44	12	10	1	0	23	2	45	11	0	58	59	27	15	0	101	226	1520	0.67
	6:15 AM	5	62	23	0	90	16	10	2	0	28	6	71	13	0	90	61	44	16	0	121	329	2105	0.65
	6:30 AM	6	62	17	0	85	30	37	6	0	73	3	58	30	0	91	72	54	22	0	148	397	2500	0.77
	6:45 AM	8	63	33	0	104	26	100	8	0	134	17	64	72	0	153	70	80	27	0	177	568	2612	0.81
	7:00 AM	17	96	41	0	154	29	121	9	0	159	35	99	96	0	230	90	130	48	0	268	811	2486	0.77
	7:15 AM	10	89	27	0	126	34	93	10	0	137	15	100	76	0	191	107	108	55	0	270	724	2096	0.72
	7:30 AM	11	99	42	0	152	29	27	6	0	62	5	94	33	0	132	83	50	30	0	163	509	1849	0.91
	7:45 AM	12	88	31	0	131	25	29	6	0	60	6	91	27	0	124	67	40	20	0	127	442	1771	0.93
	8:00 AM	9	84	15	0	108	34	20	10	0	64	15	63	28	0	106	75	43	25	0	143	421	1670	0.88
	8:15 AM	10	84	27	0	121	28	35	12	0	75	19	85	34	0	138	76	46	21	0	143	477	1592	0.83
	8:30 AM	12	76	15	0	103	23	19	10	0	52	11	74	24	0	109	89	41	37	0	167	431	1443	0.84
	8:45 AM	15	66	14	0	95	24	18	7	0	49	11	47	36	0	94	55	32	16	0	103	341	1369	0.96
	9:00 AM	11	66	14	0	91	19	13	10	0	42	10	81	20	0	111	60	25	14	0	99	343	1328	0.93
	9:15 AM	14	47	13	0	74	16	11	12	0	39	10	71	29	0	110	57	25	23	0	105	328	1311	0.92
	9:30 AM	16	59	19	0	94	19	22	12	0	53	16	75	25	0	116	41	27	26	0	94	357	1269	0.89
	9:45 AM	7	58	18	0	83	13	27	12	0	52	10	52	15	0	77	46	30	12	0	88	300	1248	0.93
Midday Peak Period	10:00 AM	16	72	19	0	107	11	21	7	0	39	14	62	16	0	92	53	19	16	0	88	326	1284	0.96
	10:15 AM	10	45	7	0	62	10	22	15	0	47	17	51	21	0	89	40	24	24	0	88	286	1282	0.95
	10:30 AM	18	67	16	0	101	14	27	15	0	56	12	71	27	0	110	40	19	10	0	69	336	1365	0.92
	10:45 AM	15	66	8	0	89	26	16	15	0	57	19	64	30	0	113	40	21	16	0	77	336	1427	0.90
	11:00 AM	20	62	5	1	88	30	23	9	0	62	22	54	29	0	105	32	23	14	0	69	324	1467	0.92
	11:15 AM	15	66	13	0	94	16	24	17	0	57	17	74	39	0	130	47	29	12	0	88	369	1527	0.96
	11:30 AM	29	65	16	0	110	25	38	24	0	87	18	66	30	0	114	38	26	23	0	87	398	1552	0.97
	11:45 AM	16	65	27	0	108	23	31	16	0	70	21	89	23	0	133	31	22	12	0	65	376	1523	0.97
	12:00 PM	15	77	20	0	112	28	27	9	0	64	17	84	27	0	128	31	27	22	0	80	384	1507	0.96
	12:15 PM	23	67	30	0	120	20	30	12	0	62	24	85	29	0	138	29	26	19	0	74	394	1495	0.95
	12:30 PM	22	61	23	0	106	17	32	17	0	66	15	65	35	0	115	51	19	12	0	82	369	1460	0.98
	12:45 PM	17	81	25	0	123	15	24	19	0	58	17	60	22	0	99	35	26	19	0	80	360	1455	0.98
	1:00 PM	22	54	14	0	90	20	35	17	0	72	11	81	26	0	118	55	19	18	0	92	372	1484	0.95
	1:15 PM	15	62	16	0	93	18	24	18	0	60	25	65	33	0	123	43	25	15	0	83	359	1513	0.94
	1:30 PM	12	71	20	0	103	20	16	8	0	44	14	70	33	0	117	34	45	21	0	100	364	1579	0.93
	1:45 PM	13	73	18	0	104	20	26	12	0	58	16	71	28	0	115	49	49	14	0	112	389	1726	0.84
PM Peak Period	2:00 PM	24	74	17	0	115	27	30	16	0	73	23	75	35	0	133	26	37	17	0	80	401	1924	0.82
	2:15 PM	19	72	17	0	108	20	44	20	0	84	22	76	50	0	148	44	27	14	0	85	425	2131	0.88
	2:30 PM	28	61	27	0	116	32	63	13	0	108	32	81	70	0	183	32	42	30	0	104	511	2277	0.94
	2:45 PM	27	101	14	0	142	24	47	12	0	83	26	66	55	1	148	90	78	46	0	214	587	2404	0.94
	3:00 PM	35	80	32	0	147	39	49	17	0	105	16	82	48	0	146	69	106	35	0	210	608	2500	0.92
	3:15 PM	36	97	35	0	168	23	33	14	0	70	27	102	62	0	191	72	53	17	0	142	571	2567	0.94
	3:30 PM	28	104	31	0	163	44	76	24	0	144	29	90	57	0	176	56	58	41	0	155	638	2658	0.97
	3:45 PM	23	124	31	0	178	45	53	27	0	125	17	82	77	0	176	88	73	43	0	204	683	2640	0.97
	4:00 PM	35	141	30	0	206	38	80	25	0	143	18	94	69	0	181	58	63	24	0	145	675	2669	0.94
	4:15 PM	42	108	23	0	173	48	84	26	0	158	17	108	79	0	204	57	44	26	0	127	662	2674	0.94
	4:30 PM	29	92	30	0	151	47	89	20	0	156	12	86	70	0	168	65	56	24	0	145	620	2776	0.91
	4:45 PM	42	116	43	0	201	36	81	21	0	138	25	99	82	0	206	81	65	21	0	167	712	2832	0.93
	5:00 PM	40	103	28	0	171	42	86	23	0	151	22	119	87	0	228	56	48	26	0	130	680	2779	0.91
	5:15 PM	52	116	46	0	214	47	80	32	0	159	11	102	95	0	208	84	67	32	0	183	764	2711	0.89
	5:30 PM	41	107	27	0	175	35	99	18	0	152	19	104	91	0	214	68	45	22	0	135	676	2615	0.97
	5:45 PM	40	95	48	0	183	22	93	18	0	133	19	86	113	0	218	49	52	24	0	125	659	2587	0.97
	6:00 PM	50	111	28	0	189	32	62	10	0	104	13	105	102	0	220	50	24	25	0	99	612	2434	0.91
	6:15 PM	44	88	25	0	157	35	97	7	0	139	20	105	114	0	239	66	39	28	0	133	668		
	6:30 PM	52	77	25	0	154	40	69	19	0	128	12	81	94	0	187	69	65	45	0	179	648		
	6:45 PM	30	68	19	0	117	13	44	11	0	68	16	63	82	0	161	82	63	15	0	160	506		
	7:00 PM	0	0	0	0	0	0	0	0	0	0	0	0	0	0	0	0	0	0	0	0	0		
	7:15 PM	0	0	0	0	0	0	0	0	0	0	0	0	0	0	0	0	0	0	0	0	0		
	7:30 PM	0	0	0	0	0	0	0	0	0	0	0	0	0	0	0	0	0	0	0	0	0		
	7:45 PM	0	0	0	0	0	0	0	0	0	0	0	0	0	0	0	0	0	0	0	0	0		
	8:00 PM	0	0	0	0	0	0	0	0	0	0	0	0	0	0	0	0	0	0	0	0	0		
	8:15 PM	0	0	0	0	0	0	0	0	0	0	0	0	0	0	0	0	0	0	0	0	0		
	8:30 PM	0	0	0	0	0	0	0	0	0	0	0	0	0	0	0	0	0	0	0	0	0		
	8:45 PM	0	0	0	0	0	0	0	0	0	0	0	0	0	0	0	0	0	0	0	0	0		
	9:00 PM	0	0	0	0	0	0	0	0	0	0	0	0	0	0	0	0	0	0	0	0	0		
	9:15 PM	0	0	0	0	0	0	0	0	0	0	0	0	0	0	0	0	0	0	0	0	0		
	9:30 PM	0	0	0	0	0	0	0	0	0	0	0	0	0	0	0	0	0	0	0	0	0		
	9:45 PM	0	0	0	0	0	0	0	0	0	0	0	0	0	0	0	0	0	0	0	0	0		
Totals		1160	4123	1209	1	6493	1379	2367	736	0	4482	866	4088	2549	1	7504	3018	2326	1229	0	6573	25052		

Peak Hour All Vehicle Volume Summary

Hourly Time Period Start Time		From North (STH 83) Right	Thru	Left	U-Tn	Total	From East (CTH NN) Right	Thru	Left	U-Tn	Total	From South (STH 83) Right	Thru	Left	U-Tn	Total	From West (CTH NN) Right	Thru	Left	U-Tn	Total	Total Hourly Volume	PHF
AM	6:45 AM	46	347	143	0	536	118	341	33	0	492	72	357	277	0	706	350	368	160	0	878	2612	0.81
MD	11:30 AM	83	274	93	0	450	96	126	61	0	283	80	324	109	0	513	129	101	76	0	306	1552	0.97
PM	4:45 PM	175	442	144	0	761	160	346	94	0	600	77	424	355	0	856	289	225	101	0	615	2832	0.93

Intersection Traffic Volume Report

Count Basics			*Page 9 of 11*
Start Date:	Wednesday, October 09, 2013	Weekday	Schools in Session
Total Number of Hours Counted: 13		Non-Holiday	No Special Events

15-Minute Heavy Vehicle Data

Heavy Vehicles (Single-Unit Trucks, Buses & Semi-Trucks)

STH 83 and CTH NN

15-Minute Heavy Vehicle Data

	15-Minute Time Period Start Time	From North (STH 83)					From East (CTH NN)					From South (STH 83)					From West (CTH NN)					15-Min Totals	Hourly Sum
		Right	Thru	Left	U-Tn	Total	Right	Thru	Left	U-Tn	Total	Right	Thru	Left	U-Tn	Total	Right	Thru	Left	U-Tn	Total		
AM Peak Period	6:00 AM	0	3	0	0	3	0	0	0	0	0	0	2	1	0	3	3	4	0	0	7	13	78
	6:15 AM	0	2	0	0	2	0	2	1	0	3	2	7	5	0	14	0	1	0	0	1	20	138
	6:30 AM	2	5	0	0	7	0	0	1	0	1	1	6	6	0	13	1	0	1	0	2	23	159
	6:45 AM	0	4	1	0	5	0	3	0	0	3	2	3	4	0	9	3	2	0	0	5	22	176
	7:00 AM	0	10	0	0	10	0	8	4	0	12	5	14	7	0	26	21	3	1	0	25	73	186
	7:15 AM	0	8	1	0	9	1	0	1	0	2	3	11	7	0	21	4	5	0	0	9	41	141
	7:30 AM	2	6	3	0	11	3	4	2	0	9	0	11	1	0	12	4	3	1	0	8	40	139
	7:45 AM	1	9	0	0	10	2	4	0	0	6	2	4	3	0	9	3	3	1	0	7	32	132
	8:00 AM	1	8	0	0	9	1	3	2	0	6	2	0	4	0	6	4	3	0	0	7	28	123
	8:15 AM	1	8	1	0	10	1	6	2	0	9	1	6	7	0	14	2	3	1	0	6	39	120
	8:30 AM	1	4	0	0	5	1	1	2	0	4	0	6	5	0	11	8	5	0	0	13	33	108
	8:45 AM	1	3	1	0	5	0	1	0	0	1	0	9	3	0	12	4	0	1	0	5	23	100
	9:00 AM	0	4	2	0	6	2	1	0	0	3	0	14	2	0	16	0	0	0	0	0	25	92
	9:15 AM	0	5	6	0	11	1	1	0	0	2	2	5	2	0	9	2	2	1	0	5	27	86
	9:30 AM	0	4	3	0	7	0	2	1	0	3	0	7	3	0	10	3	1	1	0	5	25	79
	9:45 AM	1	2	3	0	6	0	2	0	0	2	0	3	1	0	4	0	1	2	0	3	15	72
Midday Peak Period	10:00 AM	0	7	2	0	9	1	0	0	0	1	0	7	0	0	7	1	1	0	0	2	19	77
	10:15 AM	0	3	1	0	4	1	4	0	0	5	1	4	1	0	6	2	1	2	0	5	20	77
	10:30 AM	1	1	1	0	3	0	0	0	0	0	0	9	2	0	11	2	1	1	0	4	18	78
	10:45 AM	0	4	0	0	4	3	1	0	0	4	2	7	1	0	10	0	1	1	0	2	20	87
	11:00 AM	1	7	0	0	8	0	0	1	0	1	0	7	0	0	7	3	0	0	0	3	19	86
	11:15 AM	1	9	1	0	11	1	2	1	0	4	0	4	0	0	4	1	1	0	0	2	21	88
	11:30 AM	2	8	0	0	10	1	2	0	0	3	0	4	3	0	7	2	3	2	0	7	27	91
	11:45 AM	3	4	1	0	8	0	1	0	0	1	1	5	2	0	8	1	1	0	0	2	19	92
	12:00 PM	0	7	0	0	7	1	0	0	0	1	0	5	3	0	8	3	2	0	0	5	21	96
	12:15 PM	1	5	5	0	11	1	1	0	0	2	0	8	1	0	9	1	1	0	0	2	24	100
	12:30 PM	1	7	1	0	9	2	2	0	0	4	1	5	4	0	10	3	0	2	0	5	28	100
	12:45 PM	2	5	3	0	10	2	1	0	0	3	0	4	1	0	5	1	2	2	0	5	23	89
	1:00 PM	0	5	1	0	6	2	3	0	0	5	0	7	2	0	9	2	2	1	0	5	25	101
	1:15 PM	0	5	0	0	5	0	3	0	0	3	2	8	1	0	11	2	3	0	0	5	24	107
	1:30 PM	0	6	2	0	8	0	0	0	0	0	0	5	0	0	5	1	3	0	0	4	17	127
	1:45 PM	2	8	2	0	12	4	1	0	0	5	0	11	2	0	13	2	3	0	0	5	35	149
PM Peak Period	2:00 PM	2	7	0	0	9	3	3	0	0	6	1	8	2	0	11	2	3	0	0	5	31	155
	2:15 PM	2	8	0	0	10	0	7	4	0	11	0	3	10	0	13	7	3	0	0	10	44	140
	2:30 PM	0	2	0	0	2	3	2	0	0	5	2	4	18	0	24	1	3	4	0	8	39	124
	2:45 PM	1	5	0	0	6	1	1	1	0	3	3	3	3	0	9	8	10	5	0	23	41	108
	3:00 PM	1	3	2	0	6	0	2	0	0	2	0	5	0	0	5	3	0	0	0	3	16	92
	3:15 PM	2	7	1	0	10	2	0	0	0	2	0	9	3	0	12	1	3	0	0	4	28	125
	3:30 PM	0	7	3	0	10	1	0	0	0	1	2	4	2	0	8	1	2	1	0	4	23	125
	3:45 PM	0	9	0	0	9	0	0	1	0	1	0	3	1	0	4	6	3	2	0	11	25	110
	4:00 PM	3	16	2	0	21	3	4	0	0	7	0	5	3	0	8	7	5	1	0	13	49	104
	4:15 PM	0	7	1	0	8	3	2	1	0	6	0	7	3	0	10	2	2	0	0	4	28	62
	4:30 PM	1	2	0	0	3	1	3	0	0	4	0	0	0	0	0	0	0	1	0	1	8	55
	4:45 PM	2	9	0	0	11	0	0	0	0	0	1	1	4	0	6	1	1	0	0	2	19	59
	5:00 PM	0	2	0	0	2	0	2	0	0	2	0	1	1	0	2	0	1	0	0	1	7	52
	5:15 PM	0	3	1	0	4	3	1	0	0	4	0	2	1	0	3	5	4	1	0	10	21	67
	5:30 PM	1	2	1	0	4	2	0	0	0	2	0	1	1	0	2	2	2	0	0	4	12	52
	5:45 PM	2	2	1	0	5	0	0	0	0	0	1	1	4	0	6	1	0	0	0	1	12	51
	6:00 PM	0	5	1	0	6	1	2	0	0	3	0	3	7	0	10	2	0	1	0	3	22	50
	6:15 PM	0	0	0	0	0	0	3	0	0	3	0	0	0	0	0	2	1	0	0	3	6	
	6:30 PM	0	1	0	0	1	0	1	1	0	2	1	3	0	0	4	3	1	0	0	4	11	
	6:45 PM	1	2	1	0	4	0	1	0	0	1	0	1	2	0	3	2	1	0	0	3	11	
	7:00 PM	0	0	0	0	0	0	0	0	0	0	0	0	0	0	0	0	0	0	0	0	0	
	7:15 PM	0	0	0	0	0	0	0	0	0	0	0	0	0	0	0	0	0	0	0	0	0	
	7:30 PM	0	0	0	0	0	0	0	0	0	0	0	0	0	0	0	0	0	0	0	0	0	
	7:45 PM	0	0	0	0	0	0	0	0	0	0	0	0	0	0	0	0	0	0	0	0	0	
	8:00 PM	0	0	0	0	0	0	0	0	0	0	0	0	0	0	0	0	0	0	0	0	0	
	8:15 PM	0	0	0	0	0	0	0	0	0	0	0	0	0	0	0	0	0	0	0	0	0	
	8:30 PM	0	0	0	0	0	0	0	0	0	0	0	0	0	0	0	0	0	0	0	0	0	
	8:45 PM	0	0	0	0	0	0	0	0	0	0	0	0	0	0	0	0	0	0	0	0	0	
	9:00 PM	0	0	0	0	0	0	0	0	0	0	0	0	0	0	0	0	0	0	0	0	0	
	9:15 PM	0	0	0	0	0	0	0	0	0	0	0	0	0	0	0	0	0	0	0	0	0	
	9:30 PM	0	0	0	0	0	0	0	0	0	0	0	0	0	0	0	0	0	0	0	0	0	
	9:45 PM	0	0	0	0	0	0	0	0	0	0	0	0	0	0	0	0	0	0	0	0	0	
Totals		42	275	55	0	372	54	93	26	0	173	38	272	149	0	459	145	106	37	0	288	1292	

Peak Hour Heavy Vehicle Volume Summary

	Hourly Time Period Start Time	From North (STH 83)					From East (CTH NN)					From South (STH 83)					From West (CTH NN)					Total Hourly Volume
		Right	Thru	Left	U-Tn	Total	Right	Thru	Left	U-Tn	Total	Right	Thru	Left	U-Tn	Total	Right	Thru	Left	U-Tn	Total	
AM	6:45 AM	2	28	5	0	35	4	15	7	0	26	10	39	19	0	68	32	13	2	0	47	176
MD	11:30 AM	6	24	6	0	36	3	4	0	0	7	1	22	9	0	32	7	7	2	0	16	91
PM	4:45 PM	3	16	2	0	21	5	3	0	0	8	1	5	7	0	13	8	8	1	0	17	59

Intersection Traffic Volume Report

Count Basics	Version 2013.J4.1		Page 1 of 11
Start Date:	Wednesday, June 24, 2015	Weekday	Schools Not in Session
Total Number of Hours Counted: 13		Non-Holiday	No Special Events

Base Information, Observed (13) Hour and Estimated (24) Hour Volume Summaries

Intersection of: STH 83 and Black Bear Blvd

Site Information

Municipality	Village of Mukwonago		
County	Waukesha	WisDOT Region	SE
Traffic Control	Partial Stop Control		
Roadway Names		North Direction	↑
North Leg	STH 83		
East Leg	Black Bear Blvd		
South Leg	STH 83		
West Leg	None		
Special Considerations			
Schools	Not in Session		
Holidays	None		
Special Events	None		
Special Pedestrians Observed			
Pre-school children	None		
Elementry school age children	None		
Visually impaired (white cane/helper dog)	None		
Elderly/disabled (except wheelchairs)	None		
Wheelchairs/electric scooters	None		
Other (describe)	None	None	

Count Information

Hrs Counted:	6:00 AM-7:00 PM				
1st Day of Count	Wednesday, June 24, 2015			Weather	
AM Peak Period	Wednesday, June 24, 2015			Clear & Dry	
Midday Peak Period	Thursday, June 25, 2015			Clear & Dry	
PM Peak Period	Wednesday, June 24, 2015			Clear & Dry	
Calculated Peak Hours					
AM	7:00-8:00am	MD	12:15-1:15pm	PM	4:45-5:45pm
Peak Hours Selected for Analysis					
AM	6:45-7:45am	MD	12:15-1:15pm	PM	4:45-5:45pm
Daily/Seasonal Adjustment Group	(2) Urban Arterials & Collectors				
Count Expansion Group	(2) Urban Arterials & Collectors				
Daily/Seasonal Adjustment Factor	0.866		Count Expansion Factor	1.196	
Company Name	TADI, Inc.			Manual Adj.	1.000
Observers	AM Peak Period	Pat Andryk			
	Midday Peak Period	Carrie Obradovich			
	PM Peak Period	Ted Atwell			
Comments	Version 2011.J4.1 2014 DOT Factors				

Observed 13 Hour Volume Summary

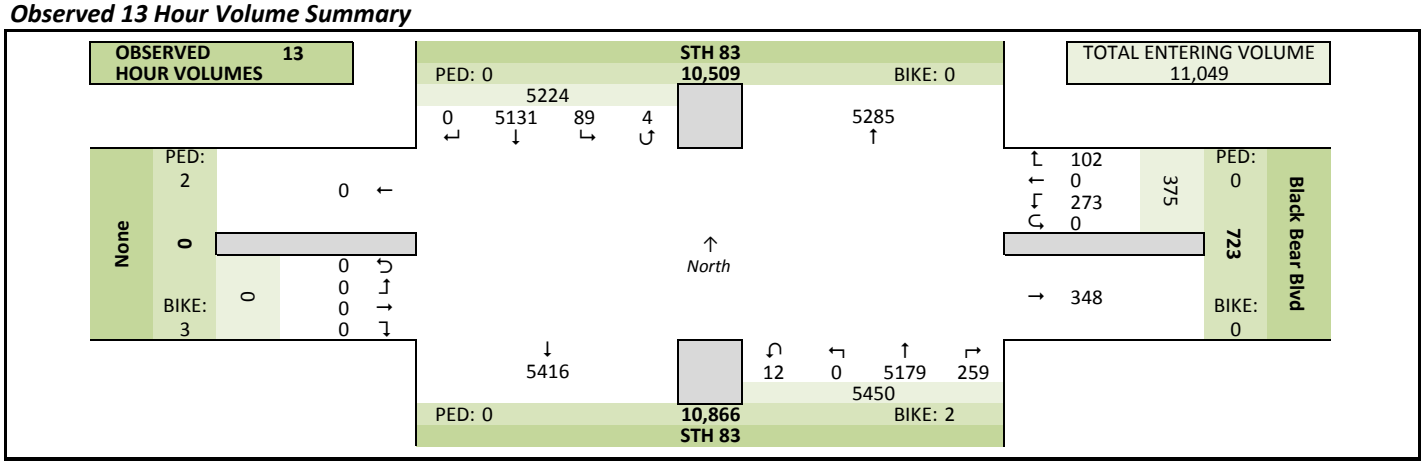

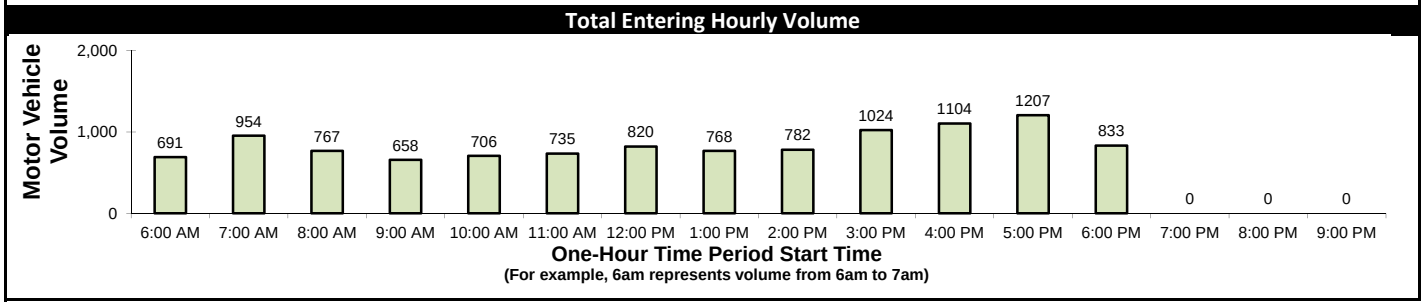

Estimated 24 Hour AADT

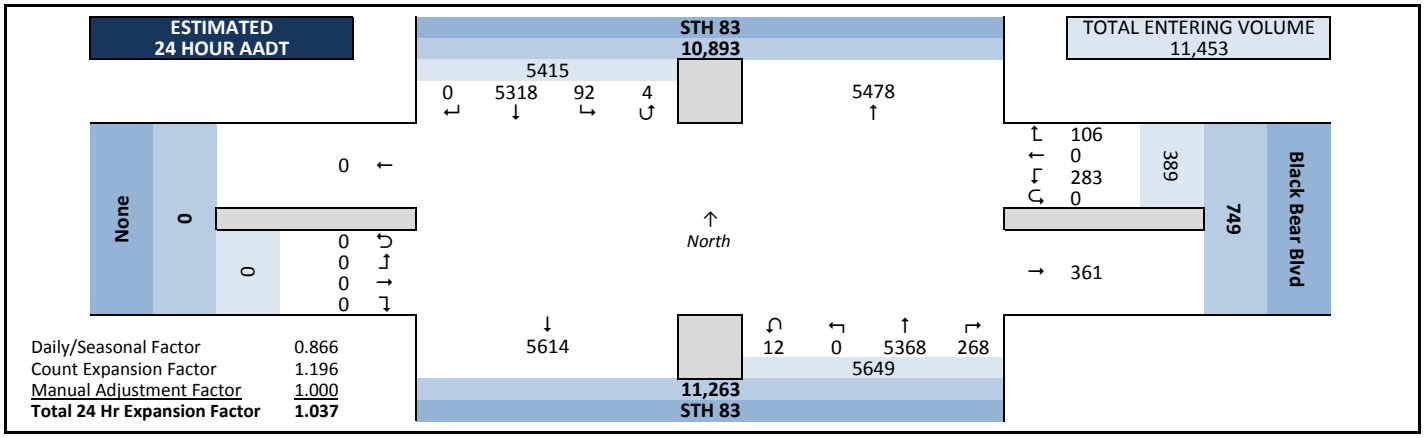

Daily/Seasonal Factor	0.866
Count Expansion Factor	1.196
Manual Adjustment Factor	1.000
Total 24 Hr Expansion Factor	**1.037**

Intersection Traffic Volume Report

Count Basics			Page 3 of 11
Start Date:	Wednesday, June 24, 2015	Weekday	Schools Not in Session
Total Number of Hours Counted: 13		Non-Holiday	No Special Events

Peak Hour Volume Summary

All Motor Vehicles

STH 83 and Black Bear Blvd

Peak Hour Volumes, Truck Percentages, and PHFs

Wednesday, June 24, 2015		From North					From East					From South					From West					
	AM Peak Hour	STH 83					Black Bear Blvd					STH 83					None					
	Start Time	Right	Thru	Left	U-Tn	Total	Right	Thru	Left	U-Tn	Total	Right	Thru	Left	U-Tn	Total	Right	Thru	Left	U-Tn	Total	Totals
AM Peak Hour	6:45 AM	0	97	2	0	99	1	0	0	0	1	0	84	0	0	84	0	0	0	0	0	184
	7:00 AM	0	75	1	0	76	3	0	1	0	4	3	123	0	0	126	0	0	0	0	0	206
	7:15 AM	0	109	0	0	109	0	0	1	0	1	2	144	0	0	146	0	0	0	0	0	256
	7:30 AM	0	116	3	0	119	1	0	1	0	2	3	129	0	0	132	0	0	0	0	0	253
	Peak Hour Volume	0	397	6	0	403	5	0	3	0	8	8	480	0	0	488	0	0	0	0	0	899
	Rounded Hourly Volume	0	395	5	0	400	5	0	5	0	10	10	480	0	0	490	0	0	0	0	0	900
	% Single Unit Trucks	0.0	5.8	33.3	0.0	6.2	40.0	0.0	0.0	0.0	25.0	0.0	4.0	0.0	0.0	3.9	0.0	0.0	0.0	0.0	0.0	5.1
	% Heavy Trucks	0.0	0.3	0.0	0.0	0.2	0.0	0.0	0.0	0.0	0.0	0.0	0.8	0.0	0.0	0.8	0.0	0.0	0.0	0.0	0.0	0.6
	% Trucks (Total)	0.0	6.0	33.3	0.0	6.5	40.0	0.0	0.0	0.0	25.0	0.0	4.8	0.0	0.0	4.7	0.0	0.0	0.0	0.0	0.0	5.7
	Peak Hour Factor (PHF)	0.00	0.86	0.50	0.00	0.85	0.42	0.00	0.75	0.00	0.50	0.67	0.83	0.00	0.00	0.84	0.00	0.00	0.00	0.00	0.00	0.88

Wednesday, June 24, 2015		From North					From East					From South					From West					
	MD Peak Hour	STH 83					Black Bear Blvd					STH 83					None					
	Start Time	Right	Thru	Left	U-Tn	Total	Right	Thru	Left	U-Tn	Total	Right	Thru	Left	U-Tn	Total	Right	Thru	Left	U-Tn	Total	Totals
Midday (MD) Peak Hour	12:15 PM	0	86	2	0	88	1	0	8	0	9	2	115	0	0	117	0	0	0	0	0	214
	12:30 PM	0	93	2	0	95	2	0	4	0	6	4	114	0	0	118	0	0	0	0	0	219
	12:45 PM	0	83	2	0	85	2	0	4	0	6	11	89	0	0	100	0	0	0	0	0	191
	1:00 PM	0	99	4	0	103	4	0	1	0	5	5	92	0	0	97	0	0	0	0	0	205
	Peak Hour Volume	0	361	10	0	371	9	0	17	0	26	22	410	0	0	432	0	0	0	0	0	829
	Rounded Hourly Volume	0	360	10	0	370	10	0	15	0	25	20	410	0	0	430	0	0	0	0	0	825
	% Single Unit Trucks	0.0	3.6	0.0	0.0	3.5	11.1	0.0	0.0	0.0	3.8	4.5	3.2	0.0	0.0	3.2	0.0	0.0	0.0	0.0	0.0	3.4
	% Heavy Trucks	0.0	2.2	0.0	0.0	2.2	0.0	0.0	0.0	0.0	0.0	0.0	1.0	0.0	0.0	0.9	0.0	0.0	0.0	0.0	0.0	1.4
	% Trucks (Total)	0.0	5.8	0.0	0.0	5.7	11.1	0.0	0.0	0.0	3.8	4.5	4.1	0.0	0.0	4.2	0.0	0.0	0.0	0.0	0.0	4.8
	Peak Hour Factor (PHF)	0.00	0.91	0.62	0.00	0.90	0.56	0.00	0.53	0.00	0.72	0.50	0.89	0.00	0.00	0.92	0.00	0.00	0.00	0.00	0.00	0.95

Wednesday, June 24, 2015		From North					From East					From South					From West					
	PM Peak Hour	STH 83					Black Bear Blvd					STH 83					None					
	Start Time	Right	Thru	Left	U-Tn	Total	Right	Thru	Left	U-Tn	Total	Right	Thru	Left	U-Tn	Total	Right	Thru	Left	U-Tn	Total	Totals
PM Peak Hour	4:45 PM	0	139	1	0	140	4	0	10	0	14	4	127	0	0	131	0	0	0	0	0	285
	5:00 PM	0	163	1	0	164	1	0	13	0	14	4	145	0	0	149	0	0	0	0	0	327
	5:15 PM	0	173	3	0	176	4	0	7	0	11	1	128	0	1	130	0	0	0	0	0	317
	5:30 PM	0	138	1	0	139	3	0	8	0	11	7	120	0	1	128	0	0	0	0	0	278
	Peak Hour Volume	0	613	6	0	619	12	0	38	0	50	16	520	0	2	538	0	0	0	0	0	1207
	Rounded Hourly Volume	0	615	5	0	620	10	0	40	0	50	15	520	0	0	535	0	0	0	0	0	1205
	% Single Unit Trucks	0.0	2.8	0.0	0.0	2.7	8.3	0.0	0.0	0.0	2.0	0.0	2.3	0.0	0.0	2.2	0.0	0.0	0.0	0.0	0.0	2.5
	% Heavy Trucks	0.0	0.8	0.0	0.0	0.8	0.0	0.0	0.0	0.0	0.0	0.0	0.4	0.0	0.0	0.4	0.0	0.0	0.0	0.0	0.0	0.6
	% Trucks (Total)	0.0	3.6	0.0	0.0	3.6	8.3	0.0	0.0	0.0	2.0	0.0	2.7	0.0	0.0	2.6	0.0	0.0	0.0	0.0	0.0	3.1
	Peak Hour Factor (PHF)	0.00	0.89	0.50	0.00	0.88	0.75	0.00	0.73	0.00	0.89	0.57	0.90	0.00	0.50	0.90	0.00	0.00	0.00	0.00	0.00	0.92

Peak Hour Pedestrian and Bicyclist Volumes

Pedestrians and Bicyclists		Crossing North Approach			Crossing East Approach			Crossing South Approach			Crossing West Approach			Total Ped & Bike Volume
		STH 83			Black Bear Blvd			STH 83			None			
	15-Minute Start Time	Pedestrian	Bicyclist	Total	Pedestrian	Bicyclist	Total	Pedestrian	Bicyclist	Total	Pedestrian	Bicyclist	Total	
AM	6:45 AM	0	0	0	0	0	0	0	0	0	0	0	0	0
	7:00 AM	0	0	0	0	0	0	0	0	0	0	1	1	1
	7:15 AM	0	0	0	0	0	0	0	0	0	0	0	0	0
	7:30 AM	0	0	0	0	0	0	0	0	0	0	0	0	0
	Total	0	0	0	0	0	0	0	0	0	0	1	1	1
MD	12:15 PM	0	0	0	0	0	0	0	0	0	0	0	0	0
	12:30 PM	0	0	0	0	0	0	0	0	0	0	0	0	0
	12:45 PM	0	0	0	0	0	0	0	0	0	0	0	0	0
	1:00 PM	0	0	0	0	0	0	0	0	0	0	0	0	0
	Total	0	0	0	0	0	0	0	0	0	0	0	0	0
PM	4:45 PM	0	0	0	0	0	0	0	0	0	0	0	0	0
	5:00 PM	0	0	0	0	0	0	0	0	0	0	0	0	0
	5:15 PM	0	0	0	0	0	0	0	0	0	0	0	0	0
	5:30 PM	0	0	0	0	0	0	0	0	0	0	0	0	0
	Total	0	0	0	0	0	0	0	0	0	0	0	0	0

Intersection Traffic Volume Report

Count Basics			*Page 5 of 11*
Start Date:	Wednesday, June 24, 2015	Weekday	Schools Not in Session
Total Number of Hours Counted: 13		Non-Holiday	No Special Events

15-Minute Motor Vehicle Data

All Motor Vehicles

STH 83 and Black Bear Blvd

15-Minute Motor Vehicle Data

15-Minute Time Period Start Time		↓ From North STH 83					← From East Black Bear Blvd					↑ From South STH 83					→ From West None					15-Min Totals	Hourly Sum	PHF
		Right	Thru	Left	U-Tn	Total	Right	Thru	Left	U-Tn	Total	Right	Thru	Left	U-Tn	Total	Right	Thru	Left	U-Tn	Total			
AM Peak Period	6:00 AM	0	58	0	0	58	0	0	0	0	0	5	70	0	0	75	0	0	0	0	0	133	691	0.86
	6:15 AM	0	64	3	0	67	1	0	0	0	1	3	102	0	0	105	0	0	0	0	0	173	764	0.93
	6:30 AM	0	94	2	0	96	1	0	0	0	1	0	104	0	0	104	0	0	0	0	0	201	847	0.83
	6:45 AM	0	97	2	0	99	1	0	0	0	1	0	84	0	0	84	0	0	0	0	0	184	899	0.88
	7:00 AM	0	75	1	0	76	3	0	1	0	4	3	123	0	0	126	0	0	0	0	0	206	954	0.93
	7:15 AM	0	109	0	0	109	0	0	1	0	1	2	144	0	0	146	0	0	0	0	0	256	931	0.91
	7:30 AM	0	116	3	0	119	1	0	1	0	2	3	129	0	0	132	0	0	0	0	0	253	879	0.87
	7:45 AM	0	112	4	0	116	2	0	2	0	4	10	109	0	0	119	0	0	0	0	0	239	830	0.87
	8:00 AM	0	67	4	0	71	1	0	2	0	3	7	102	0	0	109	0	0	0	0	0	183	767	0.94
	8:15 AM	0	91	0	0	91	1	0	4	0	5	4	104	0	0	108	0	0	0	0	0	204	753	0.92
	8:30 AM	0	94	1	0	95	4	0	1	0	5	9	95	0	0	104	0	0	0	0	0	204	704	0.86
	8:45 AM	0	81	2	1	84	1	0	8	0	9	8	75	0	0	83	0	0	0	0	0	176	663	0.94
	9:00 AM	0	70	5	1	76	2	0	8	0	10	5	76	0	2	83	0	0	0	0	0	169	658	0.96
	9:15 AM	0	76	1	0	77	1	0	4	0	5	5	68	0	0	73	0	0	0	0	0	155	688	0.86
	9:30 AM	0	78	1	0	79	3	0	2	0	5	3	76	0	0	79	0	0	0	0	0	163	702	0.88
	9:45 AM	0	93	1	0	94	0	0	5	0	5	8	64	0	0	72	0	0	0	0	0	171	707	0.89
Midday Peak Period	10:00 AM	0	81	3	0	84	1	0	6	0	7	9	99	0	0	108	0	0	0	0	0	199	706	0.89
	10:15 AM	0	72	1	0	73	1	0	5	0	6	8	82	0	0	90	0	0	0	0	0	169	698	0.91
	10:30 AM	0	62	3	0	65	2	0	7	0	9	3	90	0	1	94	0	0	0	0	0	168	721	0.94
	10:45 AM	0	74	1	0	75	0	0	7	0	7	5	83	0	0	88	0	0	0	0	0	170	732	0.95
	11:00 AM	0	75	3	0	78	1	0	8	0	9	6	98	0	0	104	0	0	0	0	0	191	735	0.96
	11:15 AM	0	86	4	0	90	2	0	7	0	9	10	83	0	0	93	0	0	0	0	0	192	740	0.94
	11:30 AM	0	78	2	0	80	3	0	12	0	15	5	78	0	1	84	0	0	0	0	0	179	762	0.89
	11:45 AM	0	84	1	0	85	3	0	14	0	17	2	69	0	0	71	0	0	0	0	0	173	802	0.92
	12:00 PM	0	82	2	0	84	1	0	8	0	9	1	101	0	1	103	0	0	0	0	0	196	820	0.94
	12:15 PM	0	86	2	0	88	1	0	8	0	9	2	115	0	0	117	0	0	0	0	0	214	829	0.95
	12:30 PM	0	93	2	0	95	2	0	4	0	6	4	114	0	0	118	0	0	0	0	0	219	811	0.93
	12:45 PM	0	83	2	0	85	2	0	4	0	6	11	89	0	0	100	0	0	0	0	0	191	781	0.95
	1:00 PM	0	99	4	0	103	4	0	1	0	5	5	92	0	0	97	0	0	0	0	0	205	768	0.94
	1:15 PM	0	92	1	0	93	2	0	4	0	6	7	90	0	0	97	0	0	0	0	0	196	744	0.95
	1:30 PM	0	101	2	0	103	5	0	4	0	9	4	73	0	0	77	0	0	0	0	0	189	746	0.94
	1:45 PM	0	77	4	0	81	2	0	12	0	14	4	79	0	0	83	0	0	0	0	0	178	759	0.94
PM Peak Period	2:00 PM	0	84	0	1	85	1	0	4	0	5	2	89	0	0	91	0	0	0	0	0	181	782	0.97
	2:15 PM	0	109	2	0	111	0	0	4	0	4	3	80	0	0	83	0	0	0	0	0	198	849	0.86
	2:30 PM	0	92	1	1	94	1	0	3	0	4	8	95	0	1	104	0	0	0	0	0	202	895	0.90
	2:45 PM	0	101	1	0	102	1	0	6	0	7	3	89	0	0	92	0	0	0	0	0	201	927	0.93
	3:00 PM	0	110	0	0	110	5	0	5	0	10	7	121	0	0	128	0	0	0	0	0	248	1024	0.86
	3:15 PM	0	128	0	0	128	0	0	8	0	8	8	98	0	2	108	0	0	0	0	0	244	1049	0.88
	3:30 PM	0	113	2	0	115	5	0	6	0	11	7	100	0	1	108	0	0	0	0	0	234	1079	0.91
	3:45 PM	0	154	2	0	156	3	0	8	0	11	7	124	0	0	131	0	0	0	0	0	298	1117	0.94
	4:00 PM	0	122	2	0	124	2	0	9	0	11	9	129	0	0	138	0	0	0	0	0	273	1104	0.97
	4:15 PM	0	138	1	0	139	3	0	6	0	9	7	119	0	0	126	0	0	0	0	0	274	1158	0.89
	4:30 PM	0	134	4	0	138	2	0	11	0	13	1	120	0	0	121	0	0	0	0	0	272	1201	0.92
	4:45 PM	0	139	1	0	140	4	0	10	0	14	4	127	0	0	131	0	0	0	0	0	285	1207	0.92
	5:00 PM	0	163	1	0	164	1	0	13	0	14	4	145	0	0	149	0	0	0	0	0	327	1207	0.92
	5:15 PM	0	173	3	0	176	4	0	7	0	11	1	128	0	1	130	0	0	0	0	0	317	1121	0.88
	5:30 PM	0	138	1	0	139	3	0	8	0	11	7	120	0	1	128	0	0	0	0	0	278	1011	0.89
	5:45 PM	0	133	0	0	133	4	0	2	0	6	1	145	0	0	146	0	0	0	0	0	285	938	0.82
	6:00 PM	0	125	1	0	126	3	0	4	0	7	3	105	0	0	108	0	0	0	0	0	241	833	0.86
	6:15 PM	0	97	0	0	97	3	0	2	0	5	7	98	0	0	105	0	0	0	0	0	207		
	6:30 PM	0	93	0	0	93	2	0	6	0	8	7	97	0	0	104	0	0	0	0	0	205		
	6:45 PM	0	85	0	0	85	1	0	1	0	2	2	90	0	1	93	0	0	0	0	0	180		
	7:00 PM	0	0	0	0	0	0	0	0	0	0	0	0	0	0	0	0	0	0	0	0	0		
	7:15 PM	0	0	0	0	0	0	0	0	0	0	0	0	0	0	0	0	0	0	0	0	0		
	7:30 PM	0	0	0	0	0	0	0	0	0	0	0	0	0	0	0	0	0	0	0	0	0		
	7:45 PM	0	0	0	0	0	0	0	0	0	0	0	0	0	0	0	0	0	0	0	0	0		
	8:00 PM	0	0	0	0	0	0	0	0	0	0	0	0	0	0	0	0	0	0	0	0	0		
	8:15 PM	0	0	0	0	0	0	0	0	0	0	0	0	0	0	0	0	0	0	0	0	0		
	8:30 PM	0	0	0	0	0	0	0	0	0	0	0	0	0	0	0	0	0	0	0	0	0		
	8:45 PM	0	0	0	0	0	0	0	0	0	0	0	0	0	0	0	0	0	0	0	0	0		
	9:00 PM	0	0	0	0	0	0	0	0	0	0	0	0	0	0	0	0	0	0	0	0	0		
	9:15 PM	0	0	0	0	0	0	0	0	0	0	0	0	0	0	0	0	0	0	0	0	0		
	9:30 PM	0	0	0	0	0	0	0	0	0	0	0	0	0	0	0	0	0	0	0	0	0		
	9:45 PM	0	0	0	0	0	0	0	0	0	0	0	0	0	0	0	0	0	0	0	0	0		
Totals		0	5131	89	4	5224	102	0	273	0	375	259	5179	0	12	5450	0	0	0	0	0	11049		

Peak Hour All Vehicle Volume Summary

Hourly Time Period Start Time		↓ From North STH 83					← From East Black Bear Blvd					↑ From South STH 83					→ From West None					Total Hourly Volume	PHF
		Right	Thru	Left	U-Tn	Total	Right	Thru	Left	U-Tn	Total	Right	Thru	Left	U-Tn	Total	Right	Thru	Left	U-Tn	Total		
AM	6:45 AM	0	397	6	0	403	5	0	3	0	8	8	480	0	0	488	0	0	0	0	0	899	0.88
MD	12:15 PM	0	361	10	0	371	9	0	17	0	26	22	410	0	0	432	0	0	0	0	0	829	0.95
PM	4:45 PM	0	613	6	0	619	12	0	38	0	50	16	520	0	2	538	0	0	0	0	0	1207	0.92

Intersection Traffic Volume Report

Count Basics			*Page 9 of 11*
Start Date:	Wednesday, June 24, 2015	Weekday	Schools Not in Session
Total Number of Hours Counted: 13		Non-Holiday	No Special Events

15-Minute Heavy Vehicle Data

Heavy Vehicles (Single-Unit Trucks, Buses & Semi-Trucks)

STH 83 and Black Bear Blvd

15-Minute Heavy Vehicle Data

15-Minute Time Period Start Time		↓ From North STH 83					← From East Black Bear Blvd					↑ From South STH 83					→ From West None					15-Min Totals	Hourly Sum
		Right	Thru	Left	U-Tn	Total	Right	Thru	Left	U-Tn	Total	Right	Thru	Left	U-Tn	Total	Right	Thru	Left	U-Tn	Total		
AM Peak Period	6:00 AM	0	0	0	0	0	0	0	0	0	0	0	5	0	0	5	0	0	0	0	0	5	34
	6:15 AM	0	4	1	0	5	0	0	0	0	0	0	6	0	0	6	0	0	0	0	0	11	42
	6:30 AM	0	2	0	0	2	0	0	0	0	0	0	7	0	0	7	0	0	0	0	0	9	44
	6:45 AM	0	4	2	0	6	0	0	0	0	0	0	3	0	0	3	0	0	0	0	0	9	51
	7:00 AM	0	4	0	0	4	2	0	0	0	2	0	7	0	0	7	0	0	0	0	0	13	59
	7:15 AM	0	6	0	0	6	0	0	0	0	0	0	7	0	0	7	0	0	0	0	0	13	60
	7:30 AM	0	10	0	0	10	0	0	0	0	0	0	6	0	0	6	0	0	0	0	0	16	57
	7:45 AM	0	5	1	0	6	1	0	0	0	1	0	10	0	0	10	0	0	0	0	0	17	70
	8:00 AM	0	5	1	0	6	1	0	0	0	1	0	7	0	0	7	0	0	0	0	0	14	66
	8:15 AM	0	3	0	0	3	0	0	0	0	0	1	6	0	0	7	0	0	0	0	0	10	72
	8:30 AM	0	16	0	0	16	1	0	0	0	1	1	11	0	0	12	0	0	0	0	0	29	82
	8:45 AM	0	6	1	0	7	1	0	0	0	1	0	5	0	0	5	0	0	0	0	0	13	71
	9:00 AM	0	5	2	0	7	1	0	2	0	3	1	9	0	0	10	0	0	0	0	0	20	70
	9:15 AM	0	9	0	0	9	0	0	0	0	0	0	11	0	0	11	0	0	0	0	0	20	63
	9:30 AM	0	7	0	0	7	0	0	0	0	0	0	11	0	0	11	0	0	0	0	0	18	53
	9:45 AM	0	3	1	0	4	0	0	0	0	0	0	8	0	0	8	0	0	0	0	0	12	41
Midday Peak Period	10:00 AM	0	4	1	0	5	1	0	0	0	1	1	6	0	0	7	0	0	0	0	0	13	43
	10:15 AM	0	3	0	0	3	0	0	0	0	0	1	6	0	0	7	0	0	0	0	0	10	52
	10:30 AM	0	4	0	0	4	0	0	0	0	0	0	2	0	0	2	0	0	0	0	0	6	54
	10:45 AM	0	6	0	0	6	0	0	1	0	1	1	6	0	0	7	0	0	0	0	0	14	59
	11:00 AM	0	9	0	0	9	0	0	1	0	1	1	11	0	0	12	0	0	0	0	0	22	56
	11:15 AM	0	4	0	0	4	0	0	1	0	1	0	7	0	0	7	0	0	0	0	0	12	41
	11:30 AM	0	3	0	0	3	0	0	1	0	1	1	6	0	0	7	0	0	0	0	0	11	38
	11:45 AM	0	5	0	0	5	0	0	2	0	2	0	4	0	0	4	0	0	0	0	0	11	35
	12:00 PM	0	5	0	0	5	0	0	0	0	0	0	2	0	0	2	0	0	0	0	0	7	38
	12:15 PM	0	4	0	0	4	0	0	0	0	0	0	5	0	0	5	0	0	0	0	0	9	40
	12:30 PM	0	3	0	0	3	0	0	0	0	0	0	5	0	0	5	0	0	0	0	0	8	41
	12:45 PM	0	7	0	0	7	1	0	0	0	1	1	5	0	0	6	0	0	0	0	0	14	44
	1:00 PM	0	7	0	0	7	0	0	0	0	0	0	2	0	0	2	0	0	0	0	0	9	38
	1:15 PM	0	6	0	0	6	0	0	0	0	0	0	4	0	0	4	0	0	0	0	0	10	43
	1:30 PM	0	9	0	0	9	0	0	0	0	0	0	2	0	0	2	0	0	0	0	0	11	48
	1:45 PM	0	3	1	0	4	0	0	1	0	1	0	3	0	0	3	0	0	0	0	0	8	65
PM Peak Period	2:00 PM	0	9	0	0	9	0	0	0	0	0	0	5	0	0	5	0	0	0	0	0	14	76
	2:15 PM	0	11	0	0	11	0	0	0	0	0	0	4	0	0	4	0	0	0	0	0	15	83
	2:30 PM	0	12	0	0	12	1	0	0	0	1	1	14	0	0	15	0	0	0	0	0	28	82
	2:45 PM	0	10	1	0	11	0	0	0	0	0	0	8	0	0	8	0	0	0	0	0	19	70
	3:00 PM	0	12	0	0	12	1	0	1	0	2	0	7	0	0	7	0	0	0	0	0	21	73
	3:15 PM	0	7	0	0	7	0	0	0	0	0	0	7	0	0	7	0	0	0	0	0	14	72
	3:30 PM	0	9	0	0	9	0	0	0	0	0	0	7	0	0	7	0	0	0	0	0	16	70
	3:45 PM	0	9	2	0	11	0	0	1	0	1	0	10	0	0	10	0	0	0	0	0	22	65
	4:00 PM	0	10	0	0	10	1	0	0	0	1	0	9	0	0	9	0	0	0	0	0	20	52
	4:15 PM	0	5	1	0	6	0	0	0	0	0	0	6	0	0	6	0	0	0	0	0	12	41
	4:30 PM	0	9	0	0	9	0	0	0	0	0	0	2	0	0	2	0	0	0	0	0	11	40
	4:45 PM	0	3	0	0	3	1	0	0	0	1	0	5	0	0	5	0	0	0	0	0	9	37
	5:00 PM	0	8	0	0	8	0	0	0	0	0	0	1	0	0	1	0	0	0	0	0	9	40
	5:15 PM	0	6	0	0	6	0	0	0	0	0	0	5	0	0	5	0	0	0	0	0	11	43
	5:30 PM	0	5	0	0	5	0	0	0	0	0	0	3	0	0	3	0	0	0	0	0	8	37
	5:45 PM	0	6	0	0	6	0	0	0	0	0	0	6	0	0	6	0	0	0	0	0	12	37
	6:00 PM	0	8	0	0	8	0	0	0	0	0	0	4	0	0	4	0	0	0	0	0	12	34
	6:15 PM	0	2	0	0	2	0	0	0	0	0	0	3	0	0	3	0	0	0	0	0	5	
	6:30 PM	0	3	0	0	3	1	0	0	0	1	0	4	0	0	4	0	0	0	0	0	8	
	6:45 PM	0	5	0	0	5	0	0	0	0	0	0	4	0	0	4	0	0	0	0	0	9	
	7:00 PM	0	0	0	0	0	0	0	0	0	0	0	0	0	0	0	0	0	0	0	0	0	
	7:15 PM	0	0	0	0	0	0	0	0	0	0	0	0	0	0	0	0	0	0	0	0	0	
	7:30 PM	0	0	0	0	0	0	0	0	0	0	0	0	0	0	0	0	0	0	0	0	0	
	7:45 PM	0	0	0	0	0	0	0	0	0	0	0	0	0	0	0	0	0	0	0	0	0	
	8:00 PM	0	0	0	0	0	0	0	0	0	0	0	0	0	0	0	0	0	0	0	0	0	
	8:15 PM	0	0	0	0	0	0	0	0	0	0	0	0	0	0	0	0	0	0	0	0	0	
	8:30 PM	0	0	0	0	0	0	0	0	0	0	0	0	0	0	0	0	0	0	0	0	0	
	8:45 PM	0	0	0	0	0	0	0	0	0	0	0	0	0	0	0	0	0	0	0	0	0	
	9:00 PM	0	0	0	0	0	0	0	0	0	0	0	0	0	0	0	0	0	0	0	0	0	
	9:15 PM	0	0	0	0	0	0	0	0	0	0	0	0	0	0	0	0	0	0	0	0	0	
	9:30 PM	0	0	0	0	0	0	0	0	0	0	0	0	0	0	0	0	0	0	0	0	0	
	9:45 PM	0	0	0	0	0	0	0	0	0	0	0	0	0	0	0	0	0	0	0	0	0	
Totals		0	320	15	0	335	14	0	11	0	25	10	309	0	0	319	0	0	0	0	0	679	

Peak Hour Heavy Vehicle Volume Summary

Hourly Time Period Start Time		↓ From North STH 83					← From East Black Bear Blvd					↑ From South STH 83					→ From West None					Total Hourly Volume
		Right	Thru	Left	U-Tn	Total	Right	Thru	Left	U-Tn	Total	Right	Thru	Left	U-Tn	Total	Right	Thru	Left	U-Tn	Total	
AM	6:45 AM	0	24	2	0	26	2	0	0	0	2	0	23	0	0	23	0	0	0	0	0	51
MD	12:15 PM	0	21	0	0	21	1	0	0	0	1	1	17	0	0	18	0	0	0	0	0	40
PM	4:45 PM	0	22	0	0	22	1	0	0	0	1	0	14	0	0	14	0	0	0	0	0	37

Intersection Traffic Volume Report

Count Basics	Version 2013.J4.1		Page 1 of 11
Start Date:	Monday, September 28, 2015	Weekday	Schools in Session
Total Number of Hours Counted: 2		Non-Holiday	No Special Events

Base Information, Observed (2) Hour and Estimated (24) Hour Volume Summaries

Intersection of: Fairwinds Blvd and CTH NN

Site Information

Municipality	Village of Mukwonago		
County	Waukesha	WisDOT Region	SE
Traffic Control	Traffic Signal		
Roadway Names		North Direction	↑
North Leg	Fairwinds Blvd		
East Leg	CTH NN		
South Leg	HS Driveway		
West Leg	CTH NN		
Special Considerations			
Schools	In Session		
Holidays	None		
Special Events	None		
Special Pedestrians Observed			
Pre-school children		None	
Elementry school age children		None	
Visually impaired (white cane/helper dog)		None	
Elderly/disabled (except wheelchairs)		None	
Wheelchairs/electric scooters		None	
Other (describe)	None	None	

Count Information

Hrs Counted:	6:45 AM-7:45 AM and 4:45 PM-5:45 PM				
1st Day of Count	Monday, September 28, 2015			Weather	
AM Peak Period	Tuesday, September 29, 2015				
Midday Peak Period					
PM Peak Period	Monday, September 28, 2015				
Calculated Peak Hours					
AM	6:45-7:45am	MD		PM	4:45-5:45pm
Peak Hours Selected for Analysis					
AM	6:45-7:45am	MD		PM	4:45-5:45pm
Daily/Seasonal Adjustment Group	(2) Urban Arterials & Collectors				
Count Expansion Group	(2) Urban Arterials & Collectors				
Daily/Seasonal Adjustment Factor	0.950		Count Expansion Factor	2.269	
Company Name	TADI, Inc.			Manual Adj.	1.000
Observers	AM Peak Period	Ted Atwell			
	Midday Peak Period	None			
	PM Peak Period	Ted Atwell			
Comments	Version 2011.J4.1 2014 DOT Factors				

Observed 2 Hour Volume Summary

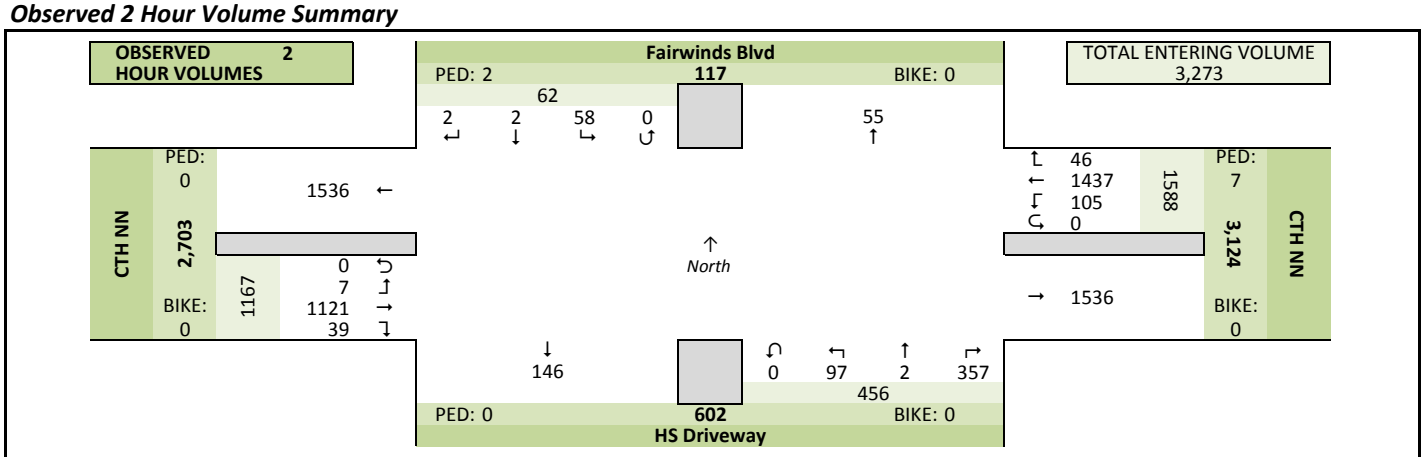

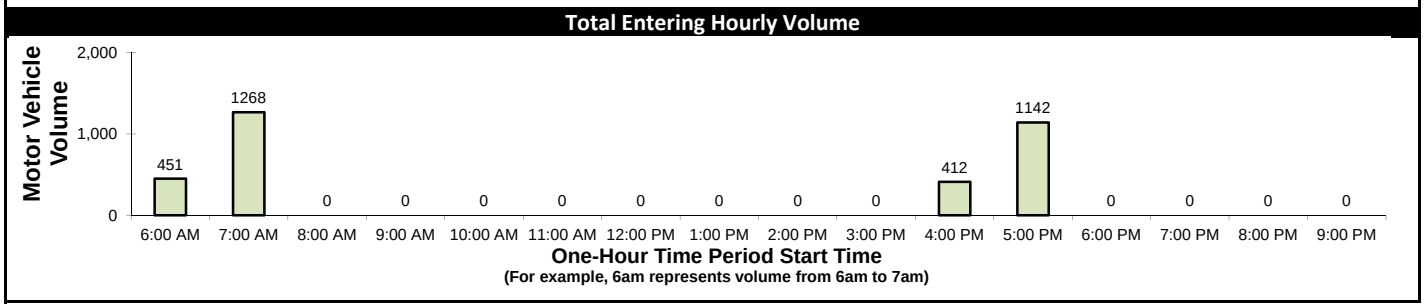

Estimated 24 Hour AADT

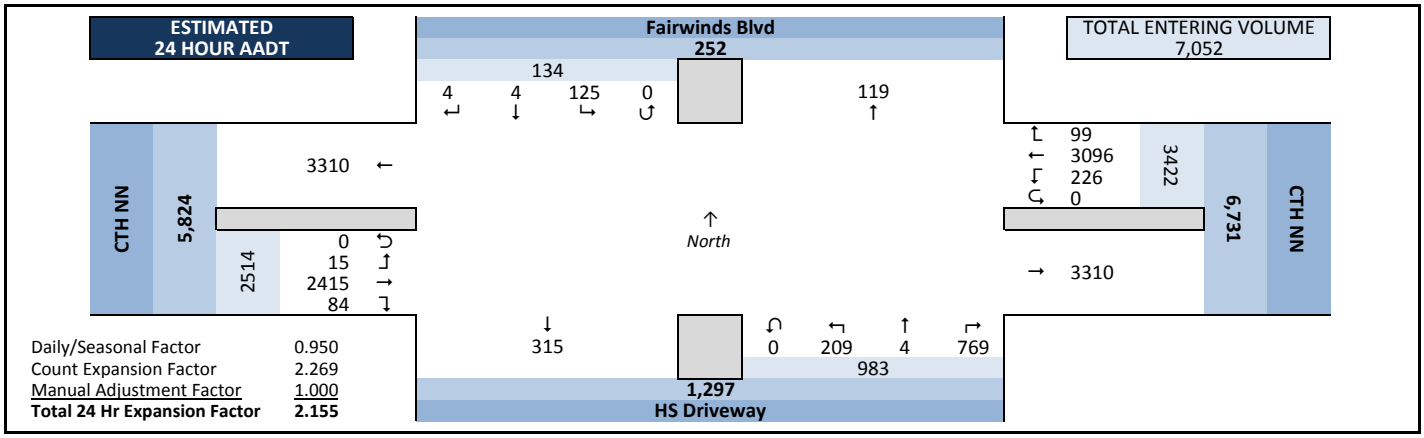

Daily/Seasonal Factor	0.950
Count Expansion Factor	2.269
Manual Adjustment Factor	1.000
Total 24 Hr Expansion Factor	**2.155**

Intersection Traffic Volume Report

Count Basics			Page 3 of 11
Start Date:	Monday, September 28, 2015	Weekday	Schools in Session
Total Number of Hours Counted: 2		Non-Holiday	No Special Events

Peak Hour Volume Summary

All Motor Vehicles

Fairwinds Blvd and CTH NN

Peak Hour Volumes, Truck Percentages, and PHFs

Tuesday, September 29, 2015		From North					From East					From South					From West					
	AM Peak Hour	Fairwinds Blvd					CTH NN					HS Driveway					CTH NN					
	Start Time	Right	Thru	Left	U-Tn	Total	Right	Thru	Left	U-Tn	Total	Right	Thru	Left	U-Tn	Total	Right	Thru	Left	U-Tn	Total	Totals
AM Peak Hour	6:45 AM	0	0	11	0	11	2	150	34	0	186	75	0	10	0	85	13	156	0	0	169	451
	7:00 AM	0	2	13	0	15	4	238	39	0	281	103	1	23	0	127	14	159	0	0	173	596
	7:15 AM	0	0	5	0	5	3	174	15	0	192	84	1	28	0	113	5	162	0	0	167	477
	7:30 AM	1	0	9	0	10	1	59	0	0	60	9	0	0	0	9	0	116	0	0	116	195
	Peak Hour Volume	1	2	38	0	41	10	621	88	0	719	271	2	61	0	334	32	593	0	0	625	1719
	Rounded Hourly Volume	0	0	40	0	40	10	620	90	0	720	270	0	60	0	330	30	595	0	0	625	1715
	% Single Unit Trucks	0.0	50.0	0.0	0.0	2.4	0.0	3.1	13.6	0.0	4.3	14.0	0.0	1.6	0.0	11.7	31.2	0.3	0.0	0.0	1.9	4.8
	% Heavy Trucks	0.0	0.0	0.0	0.0	0.0	0.0	0.2	0.0	0.0	0.1	0.0	0.0	0.0	0.0	0.0	0.0	0.2	0.0	0.0	0.2	0.1
	% Trucks (Total)	0.0	50.0	0.0	0.0	2.4	0.0	3.2	13.6	0.0	4.5	14.0	0.0	1.6	0.0	11.7	31.2	0.5	0.0	0.0	2.1	4.9
	Peak Hour Factor (PHF)	0.25	0.25	0.73	0.00	0.68	0.62	0.65	0.56	0.00	0.64	0.66	0.50	0.54	0.00	0.66	0.57	0.92	0.00	0.00	0.90	0.72

N/A		From North					From East					From South					From West					
	MD Peak Hour	Fairwinds Blvd					CTH NN					HS Driveway					CTH NN					
	Start Time	Right	Thru	Left	U-Tn	Total	Right	Thru	Left	U-Tn	Total	Right	Thru	Left	U-Tn	Total	Right	Thru	Left	U-Tn	Total	Totals
Midday (MD) Peak Hour	12:00 PM	0	0	0	0	0	0	0	0	0	0	0	0	0	0	0	0	0	0	0	0	0
	12:15 PM	0	0	0	0	0	0	0	0	0	0	0	0	0	0	0	0	0	0	0	0	0
	12:30 PM	0	0	0	0	0	0	0	0	0	0	0	0	0	0	0	0	0	0	0	0	0
	12:45 PM	0	0	0	0	0	0	0	0	0	0	0	0	0	0	0	0	0	0	0	0	0
	Peak Hour Volume	0	0	0	0	0	0	0	0	0	0	0	0	0	0	0	0	0	0	0	0	0
	Rounded Hourly Volume	0	0	0	0	0	0	0	0	0	0	0	0	0	0	0	0	0	0	0	0	0
	% Single Unit Trucks	0.0	0.0	0.0	0.0	0.0	0.0	0.0	0.0	0.0	0.0	0.0	0.0	0.0	0.0	0.0	0.0	0.0	0.0	0.0	0.0	0.0
	% Heavy Trucks	0.0	0.0	0.0	0.0	0.0	0.0	0.0	0.0	0.0	0.0	0.0	0.0	0.0	0.0	0.0	0.0	0.0	0.0	0.0	0.0	0.0
	% Trucks (Total)	0.0	0.0	0.0	0.0	0.0	0.0	0.0	0.0	0.0	0.0	0.0	0.0	0.0	0.0	0.0	0.0	0.0	0.0	0.0	0.0	0.0
	Peak Hour Factor (PHF)	0.00	0.00	0.00	0.00	0.00	0.00	0.00	0.00	0.00	0.00	0.00	0.00	0.00	0.00	0.00	0.00	0.00	0.00	0.00	0.00	0.00

Monday, September 28, 2015		From North					From East					From South					From West					
	PM Peak Hour	Fairwinds Blvd					CTH NN					HS Driveway					CTH NN					
	Start Time	Right	Thru	Left	U-Tn	Total	Right	Thru	Left	U-Tn	Total	Right	Thru	Left	U-Tn	Total	Right	Thru	Left	U-Tn	Total	Totals
PM Peak Hour	4:45 PM	0	0	7	0	7	9	224	3	0	236	10	0	1	0	11	4	151	3	0	158	412
	5:00 PM	0	0	6	0	6	9	214	6	0	229	32	0	15	0	47	0	144	1	0	145	427
	5:15 PM	0	0	3	0	3	8	187	6	0	201	31	0	17	0	48	1	117	1	0	119	371
	5:30 PM	1	0	4	0	5	10	191	2	0	203	13	0	3	0	16	2	116	2	0	120	344
	Peak Hour Volume	1	0	20	0	21	36	816	17	0	869	86	0	36	0	122	7	528	7	0	542	1554
	Rounded Hourly Volume	0	0	20	0	20	35	815	15	0	865	85	0	35	0	120	5	530	5	0	540	1545
	% Single Unit Trucks	0.0	0.0	5.0	0.0	4.8	0.0	1.2	0.0	0.0	1.2	0.0	0.0	0.0	0.0	0.0	0.0	2.3	0.0	0.0	2.2	1.5
	% Heavy Trucks	0.0	0.0	0.0	0.0	0.0	0.0	0.1	0.0	0.0	0.1	0.0	0.0	0.0	0.0	0.0	0.0	0.4	0.0	0.0	0.4	0.2
	% Trucks (Total)	0.0	0.0	5.0	0.0	4.8	0.0	1.3	0.0	0.0	1.3	0.0	0.0	0.0	0.0	0.0	0.0	2.7	0.0	0.0	2.6	1.7
	Peak Hour Factor (PHF)	0.25	0.00	0.71	0.00	0.75	0.90	0.91	0.71	0.00	0.92	0.67	0.00	0.53	0.00	0.64	0.44	0.87	0.58	0.00	0.86	0.91

Peak Hour Pedestrian and Bicyclist Volumes

Pedestrians and Bicyclists		Crossing North Approach			Crossing East Approach			Crossing South Approach			Crossing West Approach			Total Ped & Bike
		Fairwinds Blvd			CTH NN			HS Driveway			CTH NN			
	15-Minute Start Time	Pedestrian	Bicyclist	Total	Pedestrian	Bicyclist	Total	Pedestrian	Bicyclist	Total	Pedestrian	Bicyclist	Total	Volume
AM	6:45 AM	0	0	0	0	0	0	0	0	0	0	0	0	0
	7:00 AM	1	0	1	5	0	5	0	0	0	0	0	0	6
	7:15 AM	0	0	0	0	0	0	0	0	0	0	0	0	0
	7:30 AM	0	0	0	0	0	0	0	0	0	0	0	0	0
	Total	1	0	1	5	0	5	0	0	0	0	0	0	6
MD	12:00 PM	0	0	0	0	0	0	0	0	0	0	0	0	0
	12:15 PM	0	0	0	0	0	0	0	0	0	0	0	0	0
	12:30 PM	0	0	0	0	0	0	0	0	0	0	0	0	0
	12:45 PM	0	0	0	0	0	0	0	0	0	0	0	0	0
	Total	0	0	0	0	0	0	0	0	0	0	0	0	0
PM	4:45 PM	1	0	1	1	0	1	0	0	0	0	0	0	2
	5:00 PM	0	0	0	1	0	1	0	0	0	0	0	0	1
	5:15 PM	0	0	0	0	0	0	0	0	0	0	0	0	0
	5:30 PM	0	0	0	0	0	0	0	0	0	0	0	0	0
	Total	1	0	1	2	0	2	0	0	0	0	0	0	3

Intersection Traffic Volume Report

Count Basics		*Page 5 of 11*
Start Date: Monday, September 28, 2015	Weekday	Schools in Session
Total Number of Hours Counted: 2	Non-Holiday	No Special Events

15-Minute Motor Vehicle Data

All Motor Vehicles

Fairwinds Blvd and CTH NN

15-Minute Motor Vehicle Data

15-Minute Time Period Start Time		From North (Fairwinds Blvd) Right	Thru	Left	U-Tn	Total	From East (CTH NN) Right	Thru	Left	U-Tn	Total	From South (HS Driveway) Right	Thru	Left	U-Tn	Total	From West (CTH NN) Right	Thru	Left	U-Tn	Total	15-Min Totals	Hourly Sum	PHF
AM Peak Period	6:00 AM	0	0	0	0	0	0	0	0	0	0	0	0	0	0	0	0	0	0	0	0	0		
	6:15 AM	0	0	0	0	0	0	0	0	0	0	0	0	0	0	0	0	0	0	0	0	0		
	6:30 AM	0	0	0	0	0	0	0	0	0	0	0	0	0	0	0	0	0	0	0	0	0		
	6:45 AM	0	0	11	0	11	2	150	34	0	186	75	0	10	0	85	13	156	0	0	169	451	1719	0.72
	7:00 AM	0	2	13	0	15	4	238	39	0	281	103	1	23	0	127	14	159	0	0	173	596		
	7:15 AM	0	0	5	0	5	3	174	15	0	192	84	1	28	0	113	5	162	0	0	167	477		
	7:30 AM	1	0	9	0	10	1	59	0	0	60	9	0	0	0	9	0	116	0	0	116	195		
	7:45 AM	0	0	0	0	0	0	0	0	0	0	0	0	0	0	0	0	0	0	0	0	0		
	8:00 AM	0	0	0	0	0	0	0	0	0	0	0	0	0	0	0	0	0	0	0	0	0		
	8:15 AM	0	0	0	0	0	0	0	0	0	0	0	0	0	0	0	0	0	0	0	0	0		
	8:30 AM	0	0	0	0	0	0	0	0	0	0	0	0	0	0	0	0	0	0	0	0	0		
	8:45 AM	0	0	0	0	0	0	0	0	0	0	0	0	0	0	0	0	0	0	0	0	0		
	9:00 AM	0	0	0	0	0	0	0	0	0	0	0	0	0	0	0	0	0	0	0	0	0		
	9:15 AM	0	0	0	0	0	0	0	0	0	0	0	0	0	0	0	0	0	0	0	0	0		
	9:30 AM	0	0	0	0	0	0	0	0	0	0	0	0	0	0	0	0	0	0	0	0	0		
	9:45 AM	0	0	0	0	0	0	0	0	0	0	0	0	0	0	0	0	0	0	0	0	0		
Midday Peak Period	10:00 AM	0	0	0	0	0	0	0	0	0	0	0	0	0	0	0	0	0	0	0	0	0		
	10:15 AM	0	0	0	0	0	0	0	0	0	0	0	0	0	0	0	0	0	0	0	0	0		
	10:30 AM	0	0	0	0	0	0	0	0	0	0	0	0	0	0	0	0	0	0	0	0	0		
	10:45 AM	0	0	0	0	0	0	0	0	0	0	0	0	0	0	0	0	0	0	0	0	0		
	11:00 AM	0	0	0	0	0	0	0	0	0	0	0	0	0	0	0	0	0	0	0	0	0		
	11:15 AM	0	0	0	0	0	0	0	0	0	0	0	0	0	0	0	0	0	0	0	0	0		
	11:30 AM	0	0	0	0	0	0	0	0	0	0	0	0	0	0	0	0	0	0	0	0	0		
	11:45 AM	0	0	0	0	0	0	0	0	0	0	0	0	0	0	0	0	0	0	0	0	0		
	12:00 PM	0	0	0	0	0	0	0	0	0	0	0	0	0	0	0	0	0	0	0	0	0		
	12:15 PM	0	0	0	0	0	0	0	0	0	0	0	0	0	0	0	0	0	0	0	0	0		
	12:30 PM	0	0	0	0	0	0	0	0	0	0	0	0	0	0	0	0	0	0	0	0	0		
	12:45 PM	0	0	0	0	0	0	0	0	0	0	0	0	0	0	0	0	0	0	0	0	0		
	1:00 PM	0	0	0	0	0	0	0	0	0	0	0	0	0	0	0	0	0	0	0	0	0		
	1:15 PM	0	0	0	0	0	0	0	0	0	0	0	0	0	0	0	0	0	0	0	0	0		
	1:30 PM	0	0	0	0	0	0	0	0	0	0	0	0	0	0	0	0	0	0	0	0	0		
	1:45 PM	0	0	0	0	0	0	0	0	0	0	0	0	0	0	0	0	0	0	0	0	0		
PM Peak Period	2:00 PM	0	0	0	0	0	0	0	0	0	0	0	0	0	0	0	0	0	0	0	0	0		
	2:15 PM	0	0	0	0	0	0	0	0	0	0	0	0	0	0	0	0	0	0	0	0	0		
	2:30 PM	0	0	0	0	0	0	0	0	0	0	0	0	0	0	0	0	0	0	0	0	0		
	2:45 PM	0	0	0	0	0	0	0	0	0	0	0	0	0	0	0	0	0	0	0	0	0		
	3:00 PM	0	0	0	0	0	0	0	0	0	0	0	0	0	0	0	0	0	0	0	0	0		
	3:15 PM	0	0	0	0	0	0	0	0	0	0	0	0	0	0	0	0	0	0	0	0	0		
	3:30 PM	0	0	0	0	0	0	0	0	0	0	0	0	0	0	0	0	0	0	0	0	0		
	3:45 PM	0	0	0	0	0	0	0	0	0	0	0	0	0	0	0	0	0	0	0	0	0		
	4:00 PM	0	0	0	0	0	0	0	0	0	0	0	0	0	0	0	0	0	0	0	0	0		
	4:15 PM	0	0	0	0	0	0	0	0	0	0	0	0	0	0	0	0	0	0	0	0	0		
	4:30 PM	0	0	0	0	0	0	0	0	0	0	0	0	0	0	0	0	0	0	0	0	0		
	4:45 PM	0	0	7	0	7	9	224	3	0	236	10	0	1	0	11	4	151	3	0	158	412	1554	0.91
	5:00 PM	0	0	6	0	6	9	214	6	0	229	32	0	15	0	47	0	144	1	0	145	427		
	5:15 PM	0	0	3	0	3	8	187	6	0	201	31	0	17	0	48	1	117	1	0	119	371		
	5:30 PM	1	0	4	0	5	10	191	2	0	203	13	0	3	0	16	2	116	2	0	120	344		
	5:45 PM	0	0	0	0	0	0	0	0	0	0	0	0	0	0	0	0	0	0	0	0	0		
	6:00 PM	0	0	0	0	0	0	0	0	0	0	0	0	0	0	0	0	0	0	0	0	0		
	6:15 PM	0	0	0	0	0	0	0	0	0	0	0	0	0	0	0	0	0	0	0	0	0		
	6:30 PM	0	0	0	0	0	0	0	0	0	0	0	0	0	0	0	0	0	0	0	0	0		
	6:45 PM	0	0	0	0	0	0	0	0	0	0	0	0	0	0	0	0	0	0	0	0	0		
	7:00 PM	0	0	0	0	0	0	0	0	0	0	0	0	0	0	0	0	0	0	0	0	0		
	7:15 PM	0	0	0	0	0	0	0	0	0	0	0	0	0	0	0	0	0	0	0	0	0		
	7:30 PM	0	0	0	0	0	0	0	0	0	0	0	0	0	0	0	0	0	0	0	0	0		
	7:45 PM	0	0	0	0	0	0	0	0	0	0	0	0	0	0	0	0	0	0	0	0	0		
	8:00 PM	0	0	0	0	0	0	0	0	0	0	0	0	0	0	0	0	0	0	0	0	0		
	8:15 PM	0	0	0	0	0	0	0	0	0	0	0	0	0	0	0	0	0	0	0	0	0		
	8:30 PM	0	0	0	0	0	0	0	0	0	0	0	0	0	0	0	0	0	0	0	0	0		
	8:45 PM	0	0	0	0	0	0	0	0	0	0	0	0	0	0	0	0	0	0	0	0	0		
	9:00 PM	0	0	0	0	0	0	0	0	0	0	0	0	0	0	0	0	0	0	0	0	0		
	9:15 PM	0	0	0	0	0	0	0	0	0	0	0	0	0	0	0	0	0	0	0	0	0		
	9:30 PM	0	0	0	0	0	0	0	0	0	0	0	0	0	0	0	0	0	0	0	0	0		
	9:45 PM	0	0	0	0	0	0	0	0	0	0	0	0	0	0	0	0	0	0	0	0	0		
Totals		2	2	58	0	62	46	1437	105	0	1588	357	2	97	0	456	39	1121	7	0	1167	3273		

Peak Hour All Vehicle Volume Summary

Hourly Time Period Start Time		From North (Fairwinds Blvd) Right	Thru	Left	U-Tn	Total	From East (CTH NN) Right	Thru	Left	U-Tn	Total	From South (HS Driveway) Right	Thru	Left	U-Tn	Total	From West (CTH NN) Right	Thru	Left	U-Tn	Total	Total Hourly Volume	PHF
AM	6:45 AM	1	2	38	0	41	10	621	88	0	719	271	2	61	0	334	32	593	0	0	625	1719	0.72
MD	12:00 PM	0	0	0	0	0	0	0	0	0	0	0	0	0	0	0	0	0	0	0	0	0	
PM	4:45 PM	1	0	20	0	21	36	816	17	0	869	86	0	36	0	122	7	528	7	0	542	1554	0.91

Intersection Traffic Volume Report

Count Basics			*Page 9 of 11*
Start Date:	Monday, September 28, 2015	Weekday	Schools in Session
Total Number of Hours Counted: 2		Non-Holiday	No Special Events

15-Minute Heavy Vehicle Data

Heavy Vehicles (Single-Unit Trucks, Buses & Semi-Trucks)

Fairwinds Blvd and CTH NN

15-Minute Heavy Vehicle Data

15-Minute Time Period Start Time		From North (↓) Fairwinds Blvd					From East (←) CTH NN					From South (↑) HS Driveway					From West (→) CTH NN					15-Min Totals	Hourly Sum
		Right	Thru	Left	U-Tn	Total	Right	Thru	Left	U-Tn	Total	Right	Thru	Left	U-Tn	Total	Right	Thru	Left	U-Tn	Total		
AM Peak Period	6:00 AM	0	0	0	0	0	0	0	0	0	0	0	0	0	0	0	0	0	0	0	0	0	
	6:15 AM	0	0	0	0	0	0	0	0	0	0	0	0	0	0	0	0	0	0	0	0	0	
	6:30 AM	0	0	0	0	0	0	0	0	0	0	0	0	0	0	0	0	0	0	0	0	0	
	6:45 AM	0	0	0	0	0	0	3	4	0	7	8	0	0	0	8	4	2	0	0	6	21	85
	7:00 AM	0	1	0	0	1	0	8	7	0	15	24	0	0	0	24	6	1	0	0	7	47	
	7:15 AM	0	0	0	0	0	0	4	1	0	5	6	0	1	0	7	0	0	0	0	0	12	
	7:30 AM	0	0	0	0	0	0	5	0	0	5	0	0	0	0	0	0	0	0	0	0	5	
	7:45 AM	0	0	0	0	0	0	0	0	0	0	0	0	0	0	0	0	0	0	0	0	0	
	8:00 AM	0	0	0	0	0	0	0	0	0	0	0	0	0	0	0	0	0	0	0	0	0	
	8:15 AM	0	0	0	0	0	0	0	0	0	0	0	0	0	0	0	0	0	0	0	0	0	
	8:30 AM	0	0	0	0	0	0	0	0	0	0	0	0	0	0	0	0	0	0	0	0	0	
	8:45 AM	0	0	0	0	0	0	0	0	0	0	0	0	0	0	0	0	0	0	0	0	0	
	9:00 AM	0	0	0	0	0	0	0	0	0	0	0	0	0	0	0	0	0	0	0	0	0	
	9:15 AM	0	0	0	0	0	0	0	0	0	0	0	0	0	0	0	0	0	0	0	0	0	
	9:30 AM	0	0	0	0	0	0	0	0	0	0	0	0	0	0	0	0	0	0	0	0	0	
	9:45 AM	0	0	0	0	0	0	0	0	0	0	0	0	0	0	0	0	0	0	0	0	0	
Midday Peak Period	10:00 AM	0	0	0	0	0	0	0	0	0	0	0	0	0	0	0	0	0	0	0	0	0	
	10:15 AM	0	0	0	0	0	0	0	0	0	0	0	0	0	0	0	0	0	0	0	0	0	
	10:30 AM	0	0	0	0	0	0	0	0	0	0	0	0	0	0	0	0	0	0	0	0	0	
	10:45 AM	0	0	0	0	0	0	0	0	0	0	0	0	0	0	0	0	0	0	0	0	0	
	11:00 AM	0	0	0	0	0	0	0	0	0	0	0	0	0	0	0	0	0	0	0	0	0	
	11:15 AM	0	0	0	0	0	0	0	0	0	0	0	0	0	0	0	0	0	0	0	0	0	
	11:30 AM	0	0	0	0	0	0	0	0	0	0	0	0	0	0	0	0	0	0	0	0	0	
	11:45 AM	0	0	0	0	0	0	0	0	0	0	0	0	0	0	0	0	0	0	0	0	0	
	12:00 PM	0	0	0	0	0	0	0	0	0	0	0	0	0	0	0	0	0	0	0	0	0	
	12:15 PM	0	0	0	0	0	0	0	0	0	0	0	0	0	0	0	0	0	0	0	0	0	
	12:30 PM	0	0	0	0	0	0	0	0	0	0	0	0	0	0	0	0	0	0	0	0	0	
	12:45 PM	0	0	0	0	0	0	0	0	0	0	0	0	0	0	0	0	0	0	0	0	0	
	1:00 PM	0	0	0	0	0	0	0	0	0	0	0	0	0	0	0	0	0	0	0	0	0	
	1:15 PM	0	0	0	0	0	0	0	0	0	0	0	0	0	0	0	0	0	0	0	0	0	
	1:30 PM	0	0	0	0	0	0	0	0	0	0	0	0	0	0	0	0	0	0	0	0	0	
	1:45 PM	0	0	0	0	0	0	0	0	0	0	0	0	0	0	0	0	0	0	0	0	0	
PM Peak Period	2:00 PM	0	0	0	0	0	0	0	0	0	0	0	0	0	0	0	0	0	0	0	0	0	
	2:15 PM	0	0	0	0	0	0	0	0	0	0	0	0	0	0	0	0	0	0	0	0	0	
	2:30 PM	0	0	0	0	0	0	0	0	0	0	0	0	0	0	0	0	0	0	0	0	0	
	2:45 PM	0	0	0	0	0	0	0	0	0	0	0	0	0	0	0	0	0	0	0	0	0	
	3:00 PM	0	0	0	0	0	0	0	0	0	0	0	0	0	0	0	0	0	0	0	0	0	
	3:15 PM	0	0	0	0	0	0	0	0	0	0	0	0	0	0	0	0	0	0	0	0	0	
	3:30 PM	0	0	0	0	0	0	0	0	0	0	0	0	0	0	0	0	0	0	0	0	0	
	3:45 PM	0	0	0	0	0	0	0	0	0	0	0	0	0	0	0	0	0	0	0	0	0	
	4:00 PM	0	0	0	0	0	0	0	0	0	0	0	0	0	0	0	0	0	0	0	0	0	
	4:15 PM	0	0	0	0	0	0	0	0	0	0	0	0	0	0	0	0	0	0	0	0	0	
	4:30 PM	0	0	0	0	0	0	0	0	0	0	0	0	0	0	0	0	0	0	0	0	0	
	4:45 PM	0	0	0	0	0	0	3	0	0	3	0	0	0	0	0	0	4	0	0	4	7	26
	5:00 PM	0	0	0	0	0	0	1	0	0	1	0	0	0	0	0	0	1	0	0	1	2	
	5:15 PM	0	0	0	0	0	0	2	0	0	2	0	0	0	0	0	0	7	0	0	7	9	
	5:30 PM	0	0	1	0	1	0	5	0	0	5	0	0	0	0	0	0	2	0	0	2	8	
	5:45 PM	0	0	0	0	0	0	0	0	0	0	0	0	0	0	0	0	0	0	0	0	0	
	6:00 PM	0	0	0	0	0	0	0	0	0	0	0	0	0	0	0	0	0	0	0	0	0	
	6:15 PM	0	0	0	0	0	0	0	0	0	0	0	0	0	0	0	0	0	0	0	0	0	
	6:30 PM	0	0	0	0	0	0	0	0	0	0	0	0	0	0	0	0	0	0	0	0	0	
	6:45 PM	0	0	0	0	0	0	0	0	0	0	0	0	0	0	0	0	0	0	0	0	0	
	7:00 PM	0	0	0	0	0	0	0	0	0	0	0	0	0	0	0	0	0	0	0	0	0	
	7:15 PM	0	0	0	0	0	0	0	0	0	0	0	0	0	0	0	0	0	0	0	0	0	
	7:30 PM	0	0	0	0	0	0	0	0	0	0	0	0	0	0	0	0	0	0	0	0	0	
	7:45 PM	0	0	0	0	0	0	0	0	0	0	0	0	0	0	0	0	0	0	0	0	0	
	8:00 PM	0	0	0	0	0	0	0	0	0	0	0	0	0	0	0	0	0	0	0	0	0	
	8:15 PM	0	0	0	0	0	0	0	0	0	0	0	0	0	0	0	0	0	0	0	0	0	
	8:30 PM	0	0	0	0	0	0	0	0	0	0	0	0	0	0	0	0	0	0	0	0	0	
	8:45 PM	0	0	0	0	0	0	0	0	0	0	0	0	0	0	0	0	0	0	0	0	0	
	9:00 PM	0	0	0	0	0	0	0	0	0	0	0	0	0	0	0	0	0	0	0	0	0	
	9:15 PM	0	0	0	0	0	0	0	0	0	0	0	0	0	0	0	0	0	0	0	0	0	
	9:30 PM	0	0	0	0	0	0	0	0	0	0	0	0	0	0	0	0	0	0	0	0	0	
	9:45 PM	0	0	0	0	0	0	0	0	0	0	0	0	0	0	0	0	0	0	0	0	0	
Totals		0	1	1	0	2	0	31	12	0	43	38	0	1	0	39	10	17	0	0	27	111	

Peak Hour Heavy Vehicle Volume Summary

Hourly Time Period Start Time		From North (↓) Fairwinds Blvd					From East (←) CTH NN					From South (↑) HS Driveway					From West (→) CTH NN					Total Hourly Volume
		Right	Thru	Left	U-Tn	Total	Right	Thru	Left	U-Tn	Total	Right	Thru	Left	U-Tn	Total	Right	Thru	Left	U-Tn	Total	
AM	6:45 AM	0	1	0	0	1	0	20	12	0	32	38	0	1	0	39	10	3	0	0	13	85
MD	12:00 PM	0	0	0	0	0	0	0	0	0	0	0	0	0	0	0	0	0	0	0	0	0
PM	4:45 PM	0	0	1	0	1	0	11	0	0	11	0	0	0	0	0	0	14	0	0	14	26

APPENDIX A

TRAFFIC

A2. Existing Traffic Signal Timings

BONDING AND NEUTRAL (1 EACH) NO. 10 RHW (STRANDED)

FROM	TO
CB 1	SB 1
SB 1	SB 2
SB 2	SB 3
SB 3	SB 4
SB 4	SB 5
SB 5	SB 6
SB 6	SB 7
SB 7	SB 8
SB 8	CB 1

BONDED JUMPERS

FROM	TO
SB 1	PB 1
SB 2	PB 2
SB 3	PB 5
SB 4	PB 6
SB 5	PB 9
SB 6	PB 10
SB 7	PB 11
SB 8	PB 12

STREET LIGHTING 12/2 UF WITH GROUND

FROM	TO
CB 1	SB 2
SB 2	SB 4
CB 1	SB 8
SB 8	SB 6

CONFIGURATION WITH HEAD NUMBERS

3-V	5-VL	2-P
R 1,3 Y 4,6,7 G 9,10	R Y G Y G 12	DW W 13-20
3-H	**5-HL**	
R Y G 2,5,8	R Y Y G G G 11	

LEGEND

- TRAFFIC SIGNAL CONTROLLER AND BASE
- 75 mm PVC CONDUIT
- 50 mm PVC CONDUIT
- TRAFFIC SIGNAL HEAD, PEDESTAL MOUNTED, TYPE 1 BASE
- TRAFFIC SIGNAL HEAD, MASTARM MOUNTED, TYPE 2 BASE
- 300 mm x 600 mm PULLBOX
- 600 mm x 900 mm PULLBOX
- 3V 1 — MOUNTING CONFIGURATION SIGNAL HEAD NUMBER
- NOTE: ALL LENSES ARE 300 mm.
- LOOP DETECTOR (WIRE IN 25 mm PVC CONDUIT) * IS THE LOCATION OF THE FRONT CENTER OF LOOP DETECTOR
- 250 WATT H.P. SODIUM LUMINAIRES

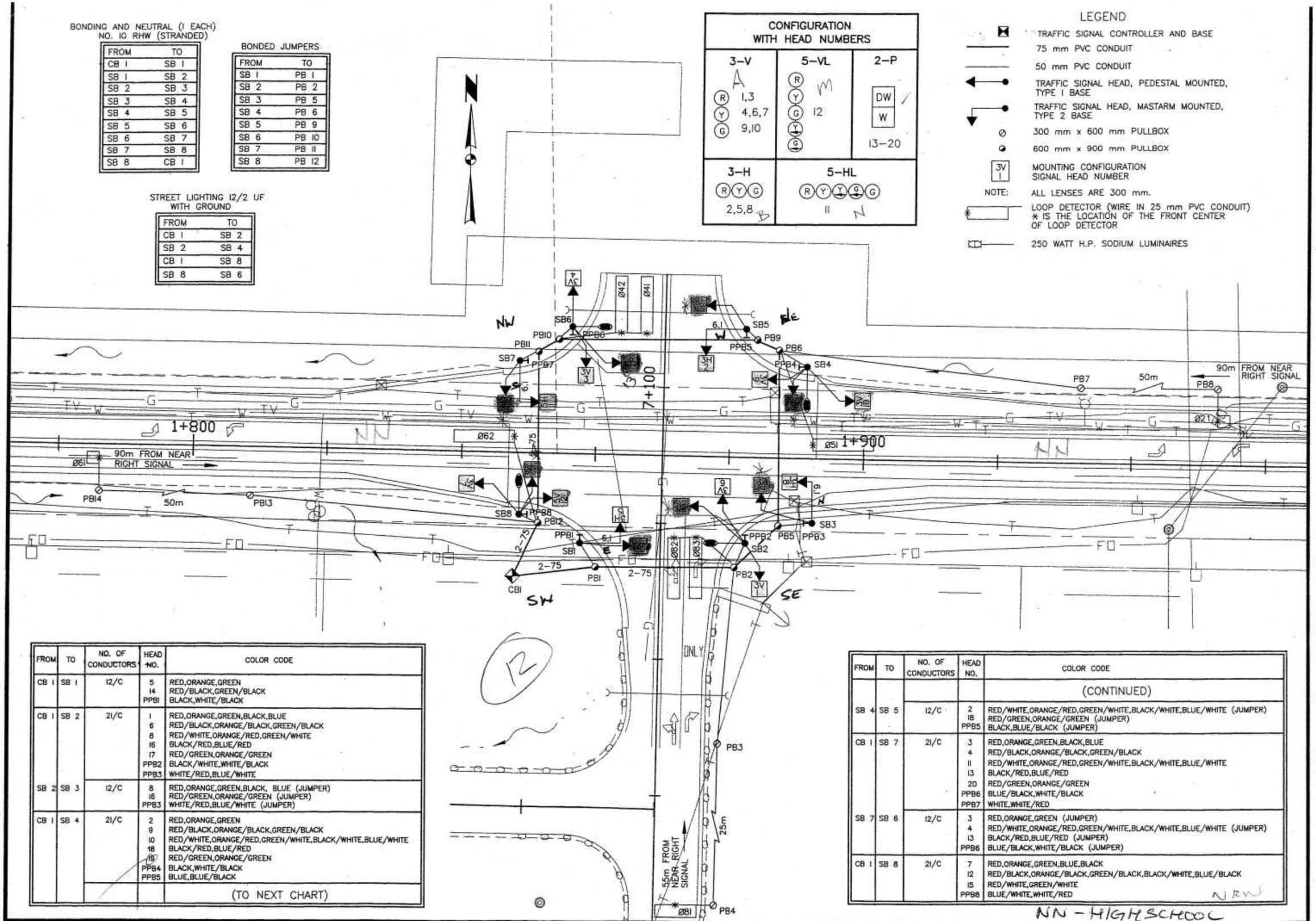

FROM	TO	NO. OF CONDUCTORS	HEAD NO.	COLOR CODE
CB 1	SB 1	12/C	5 14 PPB1	RED,ORANGE,GREEN RED/BLACK,GREEN/BLACK BLACK,WHITE/BLACK
CB 1	SB 2	21/C	1 6 8 16 17 PPB2 PPB3	RED,ORANGE,GREEN,BLACK,BLUE RED/BLACK,ORANGE/BLACK,GREEN/BLACK RED/WHITE,ORANGE/RED,GREEN/WHITE BLACK/RED,BLUE/RED RED/GREEN,ORANGE/GREEN BLACK/WHITE,WHITE/BLACK WHITE/RED,BLUE/WHITE
SB 2	SB 3	12/C	8 16 PPB3	RED,ORANGE,GREEN,BLACK, BLUE (JUMPER) RED/GREEN,ORANGE/GREEN (JUMPER) WHITE/RED,BLUE/WHITE (JUMPER)
CB 1	SB 4	21/C	2 9 10 18 19 PPB4 PPB5	RED,ORANGE,GREEN RED/BLACK,ORANGE/BLACK,GREEN/BLACK RED/WHITE,ORANGE/RED,GREEN/WHITE,BLACK/WHITE,BLUE/WHITE BLACK/RED,BLUE/RED RED/GREEN,ORANGE/GREEN BLACK,WHITE/BLACK BLUE,BLUE/BLACK
				(TO NEXT CHART)

FROM	TO	NO. OF CONDUCTORS	HEAD NO.	COLOR CODE
				(CONTINUED)
SB 4	SB 5	12/C	2 18 PPB5	RED/WHITE,ORANGE/RED,GREEN/WHITE,BLACK/WHITE,BLUE/WHITE (JUMPER) RED/GREEN,ORANGE/GREEN (JUMPER) BLACK,BLUE/BLACK (JUMPER)
CB 1	SB 7	21/C	3 4 11 13 20 PPB6 PPB7	RED,ORANGE,GREEN,BLACK,BLUE RED/BLACK,ORANGE/BLACK,GREEN/BLACK RED/WHITE,ORANGE/RED,GREEN/WHITE,BLACK/WHITE,BLUE/WHITE BLACK/RED,BLUE/RED RED/GREEN,ORANGE/GREEN BLUE/BLACK,WHITE/BLACK WHITE,WHITE/RED
SB 7	SB 6	12/C	3 4 13 PPB6	RED,ORANGE,GREEN (JUMPER) RED/WHITE,ORANGE/RED,GREEN/WHITE,BLACK/WHITE,BLUE/WHITE (JUMPER) BLACK/RED,BLUE/RED (JUMPER) BLUE/BLACK,WHITE/BLACK (JUMPER)
CB 1	SB 8	21/C	7 12 15 PPB8	RED,ORANGE,GREEN,BLUE,BLACK RED/BLACK,ORANGE/BLACK,GREEN/BLACK,BLACK/WHITE,BLUE/BLACK RED/WHITE,GREEN/WHITE BLUE/WHITE,WHITE/RED

NN - HIGH SCHOOL

*BUILT IN '99

Waukesha County CADD Sheet - MDETAIL Drawing File : SIGPLAN8

TRAFFIC SIGNAL PLAN @ E. High School Drive | SCALE 1:250 | HWY: C.T.H. "NN" | COUNTY: WAUKESHA | STATE PROJ. NO.: 97-3792 (11) | SHEET NO.: 2.31 | M

SIGNAL TIMMING
[redacted] 9-1-11
[redacted] to Present

Programmed EPAC Data

Intersection Name: CTH NN Muckwonago HS East Ent. **Intersection Alias: nnhs**

Access Code: 0 Channel: 1 Address: Revision: 3.34e

Access Data

:1200 Baud

:19200 Baud

Phase Data

Vehical Basic Timings

Phase	Min_Grn	Passage	Max1	Max2	Yellow	All Red
2	7	5.5	60	45	4.5	1.2
4	6	3.0	30	30	3.0	1.0
5	6	4.5	25	10	4.5	1.2
6	15	5.5	60	45	4.5	1.2
8	6	3.0	30	30	3.0	1.0

Vehical Density Timings

Added Initial	Max_Initial	Time B4 Reduction	Cars Before	Time To Reduce	Min_Gap
0.0	0	0	0	0	2.0
1.2	25	0	0	0	1.5
0.0	0	0	0	0	0.0
0.0	0	0	0	0	2.0
1.2	25	0	0	0	1.5

Pedestrian Timing

Phase	Walk	Ped Clear	Flashing Walk	Extended Ped Clear	Actuated Rest in Walk
2	6	14	No	0	No
4	6	14	No	0	No
5	0	0	No	0	No
6	6	14	No	0	No
8	6	14	No	0	No

General Control

Initialize	Non-Act Response	Veh Recall	Ped Recall	Recall Delay
Green	None	Min	None	0
Inactive	None	None	None	0
Inactive	None	None	None	0
Green	None	Min	None	0
Inactive	None	None	None	0

Miscellaneous

Non Lock	Dual Entry	Last Car Passage	Conditional Service	No Simultaneous Gap Out
No	Yes	No	No	No
Yes	Yes	No	No	No
Yes	No	No	No	No
No	Yes	No	No	No
Yes	Yes	No	No	No

Special Sequence

Phase	Phase Omit	Minus Yellow Phase	Omit Call
2	0	0	0
4	0	0	0
5	2	0	0
6	0	0	0
8	0	0	0

Vehical Detector Phase Assignment

Assigned Phase	Mode	Switched Phase	Extend	Delay

Default Data

Pedestrian Detector

Default Data

Special Detector Phase Assignment

Assign Phase	Mode	Switched Phase	Extend	Delay

:

Default Data

Unit Data

General Control

Startup Time: 5sec Startup State: Flash Red Revert: 4.0sec

Auto Ped Clear: No Stop Time Reset: No Alternate Sequence: 0

ABC connector Input Modes: 0

ABC connector Output Modes: 0

D connector Input Modes: 0

D connector Output Modes: 0

Ring	Input Response	Output Selection
1	Ring 1	Ring 1
2	Ring 2	Ring 2
3	None	None
4	None	None

Remote Flash

Test A = Flash

Phase	Flash Entry Phase	Flash Exit Phase

Default Data - No Flash

Channel	Flash Color	Flash Alternat

Default Data - No Flash

Overlaps

Overlaps

Phase(s)	A	B	C	D	E	F	G	H	I	J	K	L	M	N	O	P

	A	B	C	D	E	F	G	H	I	J	K	L	M	N	O	P
Green	0	0	0	0	0	0	0	0	0	0	0	0	0	0	0	0
Yellow	4.0	2.0	4.0	4.0	4.0	4.0	4.0	4.0	4.0	4.0	4.0	4.0	4.0	4.0	4.0	4.0
Red	2.0	2.0	2.0	2.0	2.0	2.0	2.0	2.0	2.0	2.0	2.0	2.0	2.0	2.0	2.0	2.0
Stop Grn/Yel Phase	0	0	0	0	0	0	0	0	0	0	0	0	0	0	0	0
Strat Green Phase	0	0	0	0	0	0	0	0	0	0	0	0	0	0	0	0

Ring

Phase	Ring	Next Phase
2	1	3
4	1	1
5	2	6
6	2	7
8	2	5

Phase(s)

Concurrent Phases	1	2	3	4	5	6	7	8	9	10	11	12	13	14	15	16
	1	2	3	4	1	1	3	3	9	10	11	12	13	14	15	16
	5	5	7	7	2	2	4	4								
	6	6	8	8	5	6	7	8								

Alternate Sequences

No Alternate Sequences Programmed

Port 1 Data

BIU Addr	Port Status	Message 40

Default Data

Control	Channel	Hardware Pins	Control	Channel	Hardware Pins
1 - Veh Phase 1	1	1 - Phase 1 RYG	2 - Veh Phase 2	2	2 - Phase 2 RYG
3 - Veh Phase 3	3	3 - Phase 3 RYG	4 - Veh Phase 4	4	4 - Phase 4 RYG
5 - Veh Phase 5	5	5 - Phase 5 RYG	6 - Veh Phase 6	6	6 - Phase 6 RYG
7 - Veh Phase 7	7	7 - Phase 7 RYG	8 - Veh Phase 8	8	8 - Phase 8 RYG
18 - Ped Phase 2	9	10 - Phase 2 DPW	20 - Ped Phase 4	10	12 - Phase 4 DPW
22 - Ped Phase 6	11	14 - Phase 6 DPW	24 - Ped Phase 8	12	16 - Phase 8 DPW
33 - Overlap A	13	17 - Overlap A RYG	34 - Overlap B	14	18 - Overlap B RYG
35 - Overlap C	15	19 - Overlap C RYG	36 - Overlap D	16	20 - Overlap D RYG
17 - Ped Phase 1	17	9 - Phase 1 DPW	19 - Ped Phase 3	18	11 - Phase 3 DPW
21 - Ped Phase 5	19	13 - Phase 5 DPW	23 - Ped Phase 7	20	15 - Phase 7 DPW

Coordination Data

Dial/Split **Cycle**

/

General Coordination Data

Operation Mode: 0=Free
Coordination Mode: 0=Permissive
Maximun Mode: 2=Max 2
Correction Mode: 0=Dwell

Offset Mode: 0=Beg Grn
Force Mode: 0=Plan
Max Dwell Time: 0
Yield Period: 0

Manual Dial: 1
Manual Split: 1
Manual Offset: 1

Split Times and Phase Modes

Dial / Split

Ph.	Splits	Ph. Mode	Ph.	Splits	Ph. Mode	Ph.	Splits	Ph. Mode	Ph.	Splits	Ph. Mode

Traffic Plan Data

Plan: // Offset Time: Alt. Sequence: Mode: Rg 2 Lag Time: Rg 3 Lag Time: Rg 4 Lag Time:

Local TBC Data

Start of Daylight Saving Month: 0 Week: 0 Cycle Zero Reference Hours: 0 Min: 0

End of Daylight Saving Month: 0 Week: 0

Source Day	Equate Days 1	2	3	4	5	6	7

Traffic Data

PHASE FUNCTION

Event	Day	Time	D/S/O	flash	1	2	3	4	5	6	7	8	9	10	11	12	13	14	15	16
		:	//																	

Timing Cover Sheet for Signal: S0336 HWY: 83 and CTH NN (School Rd)

Date:	3/7/2012	Changes Made By:	S. Sward
Signal No	S0336 S336	Highway:	83
County:	WAU	Local Hwy:	Rochester St
Controller:	EPAC	Location:	CTH NN (School Rd)
School:	High, Middle & Elementary	Audible Ped:	No

Pre-emption

Emergency:	No	Type:	Phases:	EVP Maintenance Id:
Railroad:	No	Type:	Phases:	EVP Contact:
				Contact Phone:
				Community:

Coordination

System No:

CoordType:

Dip Switch Setting

DST ☐

Controller IP Address:

Comments:

TBC:	No
Tone:	No
Closed Loop:	No
Hardwire:	No

	Length	Split 1	Split 2	Split 3	Split 4
Cycle 1=					
Cycle 2=					
Cycle 3=					
Cycle 4=					

Prom Replacement

Signal Plan UNK

Pre-empt: UNK

Part of a Local System: No

Local Contact:

Phone Number:

Overlaps

Overlap A= Phases:

Overlap B= Phases:

Overlap C= Phases:

Overlap D= Phases:

Flash

Emergency: R-R

Off Peak: No

Off Peak Times:

Detector Timing

Dilemna Zone: No

Video Detection:

Detector Number	11	31	41	44	45	51	71	81	84	85				
Stretch	2.25	2.0	3.0			2.5	2.25	2.25						
Right Turn Delay				8.0	8.0				8.0	8.0				
Left Turn Delay														

Unique Features

Programmed EPAC Data

2/8/2013
10:59:48AM

Intersection Name: SE67S0336 STH 83 & CTH NN **Intersection Alias: S0336**

Access Code: 9999 Channel: 1 Address: 0 Revision: 3.34e

Access Data

Port 2 Comm :19200 Baud
Port 3 Comm :1200 Baud

Phase Data

Vehical Basic Timings / Vehical Density Timings

Phase	Min_Grn	Passage	Max1	Max2	Yellow	All Red	Added Initial	Max_Initial	Time B4 Reduction	Cars Before	Time To Reduce	Min_Gap
1	8	1.5	20	20	3.5	1.0	0.0	8	20	0	0	1.5
2	15	3.4	40	40	3.9	2.5	2.5	20	20	0	20	2.0
3	6	1.5	20	20	3.5	1.0	0.0	6	20	0	0	1.5
4	8	1.5	30	30	4.0	2.6	0.0	8	30	0	0	1.5
5	6	1.5	20	20	3.5	1.0	0.0	6	20	0	0	1.5
6	15	4.3	40	40	3.9	2.5	2.5	19	19	0	21	2.0
7	6	1.5	20	20	3.5	1.0	0.0	6	20	0	0	1.5
8	8	1.5	30	30	4.0	2.6	0.0	8	30	0	0	1.5

Pedestrian Timing / General Control / Miscellaneous

Phase	Walk	Ped Clear	Flashing Walk	Extended Ped Clear	Actuated Rest in Walk	Initialize	Non-Act Response	Veh Recall	Ped Recall	Recall Delay	Non Lock	Dual Entry	Last Car Passage	Conditional Service	No Simultaneous Gap Out
1	0	0	No	0	No	Inactive	None	None	None	0	Yes	No	No	No	No
2	7	37	No	0	No	Green	None	Min	None	0	No	Yes	No	No	No
3	0	0	No	0	No	Inactive	None	None	None	0	Yes	No	No	No	No
4	7	35	No	0	No	Inactive	None	None	None	0	Yes	Yes	No	No	No
5	0	0	No	0	No	Inactive	None	None	None	0	Yes	No	No	No	No
6	7	32	No	0	No	Green	None	Min	None	0	No	Yes	No	No	No
7	0	0	No	0	No	Inactive	None	None	None	0	Yes	No	No	No	No
8	7	37	No	0	No	Inactive	None	None	None	0	Yes	Yes	No	No	No

Special Sequence
Default Data

Vehical Detector Phase Assignment

	Assigned Phase	Mode	Switched Phase	Extend	Delay
Default Data					

Pedestrian Detector
Default Data

Special Detector Phase Assignment

	Assign Phase	Mode	Switched Phase	Extend	Delay
: **Default Data**					

Unit Data

General Control

Startup Time: 10sec Startup State: Flash Red Revert: 2sec
Auto Ped Clear: No Stop Time Reset: No Alternate Sequence: 0

ABC connector Input Modes: 0
ABC connector Output Modes: 0
D connector Input Modes: 0
D connector Output Modes: 0

Ring	Input Respons	Output Selection
1	Ring 1	Ring 1
2	Ring 2	Ring 2
3	None	None
4	None	None

Remote Flash

Test A = Flash No

Phase	Flash Entry Phase	Flash Exit Phase
2	No	Yes
6	No	Yes

Channel	Flash Color	Flash Alternat
Default Data - No Flash		

Overlaps

Phase(s)	Overlaps A	B	C	D	E	F	G	H	I	J	K	L	M	N	O	P

	A	B	C	D	E	F	G	H	I	J	K	L	M	N	O	P
Trail Green	0	0	0	0	0	0	0	0	0	0	0	0	0	0	0	0
Trail Yellow	4.0	4.0	4.0	4.0	4.0	4.0	4.0	4.0	4.0	4.0	4.0	4.0	4.0	4.0	4.0	4.0
Trail Red	2.0	2.0	2.0	2.0	2.0	2.0	2.0	2.0	2.0	2.0	2.0	2.0	2.0	2.0	2.0	2.0
Plus Green	0	0	0	0	0	0	0	0	0	0	0	0	0	0	0	0
Minus Green	0	0	0	0	0	0	0	0	0	0	0	0	0	0	0	0

Ring

Phase	Ring	Next Phase
1	1	2
2	1	3
3	1	4
4	1	1
5	2	6
6	2	7
7	2	8
8	2	5

Phase(s)

Concurrent Phases	1	2	3	4	5	6	7	8	9	10	11	12	13	14	15	16
	1	2	3	4	1	1	3	3	9	10	11	12	13	14	15	16
	5	5	7	7	2	2	4	4								
	6	6	8	8	5	6	7	8								

Alternate Sequences

Alternate Sequences

Phase Pair(s)	1	2	3	4	5	6	7	8	9	10	11	12	13	14	15
1	**12**	**34**	**12**	**56**	**12**	**34**	**12**	**78**	**12**	**34**	**12**	**56**	**12**	**34**	**12**
2	**00**	**00**	**34**	**00**	**56**	**56**	**34**	**00**	**78**	**78**	**34**	**78**	**56**	**56**	**34**
3	**00**	**00**	**00**	**00**	**00**	**00**	**56**	**00**	**00**	**00**	**78**	**00**	**78**	**78**	**56**
4	**00**	**00**	**00**	**00**	**00**	**00**	**00**	**00**	**00**	**00**	**00**	**00**	**00**	**00**	**78**

Port 1 Data

BIU Addr	Port Status	Message 40

Default Data

Channel Assignment

Control	Channel	Hardware Pin Set		Control	Channel	Hardware Pin Set		Control	Channel	Hardware Pin Set	
Ph.1 Veh	1	1 - Ph.1 RYG	1	Ph.2 Veh	2	2 - Ph.2 RYG	2	Ph.3 Veh	3	3 - Ph.3 RYG	3
Ph.4 Veh	4	4 - Ph.4 RYG	4	Ph.5 Veh	5	5 - Ph.5 RYG	5	Ph.6 Veh	6	6 - Ph.6 RYG	6
Ph.7 Veh	7	7 - Ph.7 RYG	7	Ph.8 Veh	8	8 - Ph.8 RYG	8	Ph.2 Ped	9	10 - Ph.2 DPW	10
Ph.4 Ped	10	12 - Ph.4 DPW	12	Ph.6 Ped	11	14 - Ph.6 DPW	14	Ph.8 Ped	12	16 - Ph.8 DPW	16
Ph.1 OLP	13	17 - Ph.1 RYG	17	Ph.2 OLP	14	18 - Ph.2 RYG	18	Ph.3 OLP	15	19 - Ph.3 RYG	19
Ph.4 OLP	16	20 - Ph.4 RYG	20	Ph.1 Ped	17	9 - Ph.1 DPW	9	Ph.3 Ped	18	11 - Ph.3 DPW	11
Ph.5 Ped	19	13 - Ph.5 DPW	13	Ph.7 Ped	20	15 - Ph.7 DPW	15				

Coordination Data

Dial/Split Cycle

/

General Coordination Data

Operation Mode: 0=Free
Coordination Mode: 0=Permissive
Maximun Mode: 0=Inhibit
Correction Mode: 2=Short Way

Offset Mode: 0=Beg Grn
Force Mode: 0=Plan
Max Dwell Time: 15
Yield Period: 0

Manual Dial: 1
Manual Split: 1
Manual Offset: 1

Split Times and Phase Modes

Dial / Split

Ph.	Splits	Ph. Mode	Ph.	Splits	Ph. Mode	Ph.	Splits	Ph. Mode	Ph.	Splits	Ph. Mode

Traffic Plan Data

Plan: // Offset Time: Alt. Sequence: Mode: Rg 2 Lag Time: Rg 3 Lag Time: Rg 4 Lag Time:

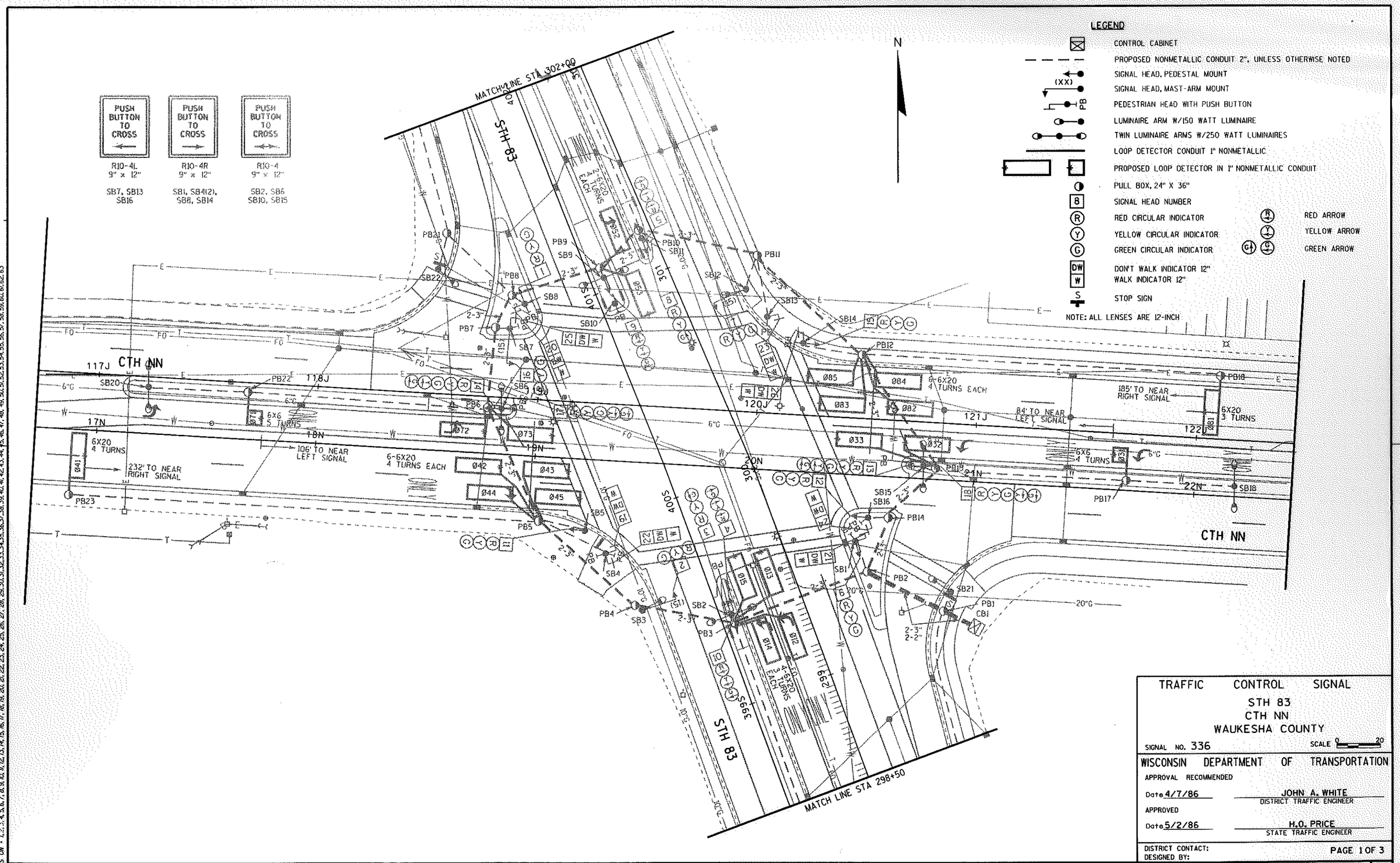

STATE PROJECT NUMBER:	HWY: STH 83	COUNTY: WAUKESHA	TRAFFIC SIGNAL PLAN	SCALE, FEET 0 40	SHEET NO:	E

FILE NAME : s:\Filec\projects\d2_signals\336c1.dgn PLOT DATE : 28-OCT-2002 13:21 ORG DATE : PLOT NAME : Originator : Dist PLOT SCALE : 40.006662:1.000000

WISDOT/CADDS SHEET 42

LEVELS ON • 1,2,3,4,5,6,7,8,9,10,11,12,13,14,15,16,17,18,19,20,21,22,23,24,25,26,27,28,29,30,31,32,33,34,35,36,37,38,39,40,41,42,43,44,45,46,47,48,49,50,51,52,53,54,55,56,57,58,59,60,61,62,63

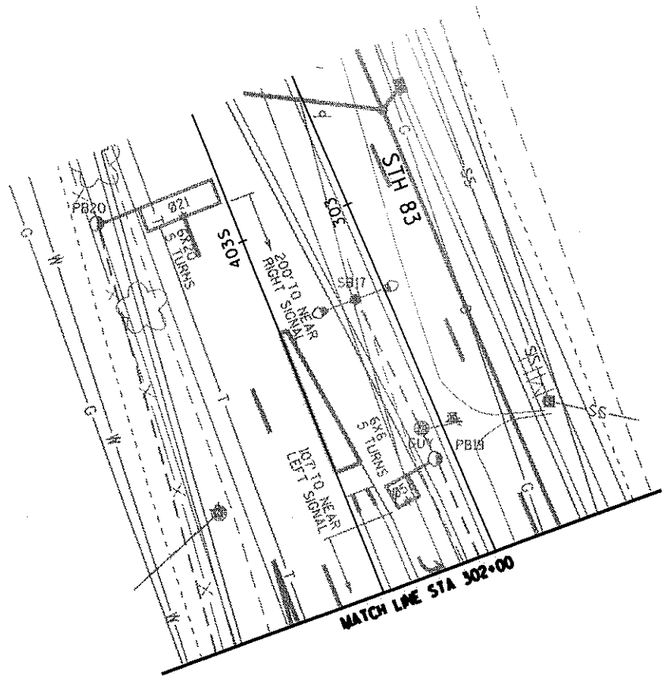

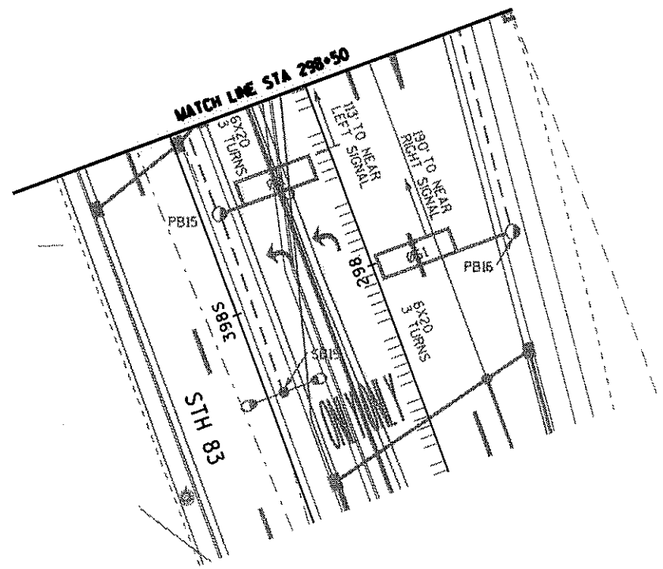

N

TRAFFIC CONTROL SIGNAL

STH 83 AND CTH NN

WAUKESHA COUNTY

SIGNAL NO. 336

SCALE 0 20

DISTRICT CONTACT:

DESIGNED BY:

PAGE 2 OF 3

STATE PROJECT NUMBER: 1331-08-70	HWY: STH 83	COUNTY: WAUKESHA	TRAFFIC SIGNAL PLAN - STH 83 AT CTH NN	SCALE, FEET 0 40	SHEET NO: E

LEVELS ON : 1,2,3,4,5,6,7,8,9,10,11,12,13,14,15,16,17,18,19,20,21,22,23,24,25,26,27,28,29, 31,32,33,34,35,36,37,38,39,40,41,42,43,44,45,46,47,48,49,50,51,52,53,54,55,56,57,58,59,60,61,62,63

SEQUENCE OF OPERATION

		HEAD NUMBERS	01 R/W	01 CLEAR TO **			02 R/W	02 CLEAR TO **			03 R/W	03 CLEAR TO **			04 R/W	04 CLEAR TO **			FLASH
	01	9,10	G	Y	R		R	R	R		R	R	R		R	R	R		R
	02	1,2,3	R	R	R		G	Y	R		R	R	R		R	R	R		R
	03	17,18	-	-	-		-	-	-		G	Y	-		-	-	-		-
	04	11,12,13,14	R	R	R		R	R	R		R	R	R		G	Y	R		R
RING 1	05	4,5	R	R	R		R	R	R		R	R	R		R	R	R		R
	06	6,7,8	R	R	R		R	R	R		R	R	R		R	R	R		R
	07	13,14	-	-	-		-	-	-		-	-	-		-	-	-		-
	08	15,16,17,18	R	R	R		R	R	R		R	R	R		R	R	R		R
	02P	19,20	DW	DW	DW		*	DW	DW		DW	DW	DW		DW	DW	DW		
	04P	21,22	DW	DW	DW		DW	DW	DW		DW	DW	DW		*	DW	DW		
	06P	23,24	DW	DW	DW		DW	DW	DW		DW	DW	DW		DW	DW	DW		
	08P	25,26	DW	DW	DW		DW	DW	DW		DW	DW	DW		DW	DW	DW		

		HEAD NUMBERS	05 R/W	05 CLEAR TO **			06 R/W	06 CLEAR TO **			07 R/W	07 CLEAR TO **			08 R/W	08 CLEAR TO **		
	01	9,10	R	R	R		R	R	R		R	R	R		R	R	R	
	02	1,2,3	R	R	R		R	R	R		R	R	R		R	R	R	
	03	17,18	-	-	-		-	-	-		-	-	-		-	-	-	
	04	11,12,13,14	R	R	R		R	R	R		R	R	R		R	R	R	
RING 2	05	4,5	G	Y	R		R	R	R		R	R	R		R	R	R	
	06	6,7,8	R	R	R		G	Y	R		R	R	R		R	R	R	
	07	13,14	-	-	-		-	-	-		G	Y	-		-	-	-	
	08	15,16,17,18	R	R	R		R	R	R		R	R	R		G	Y	R	
	02P	19,20	DW	DW	DW		DW	DW	DW		DW	DW	DW		DW	DW	DW	
	04P	21,22	DW	DW	DW		DW	DW	DW		DW	DW	DW		DW	DW	DW	
	06P	23,24	DW	DW	DW		*	DW	DW		DW	DW	DW		DW	DW	DW	
	08P	25,26	DW	DW	DW		DW	DW	DW		DW	DW	DW		*	DW	DW	

BARRIER

N

** CLEARANCE TO A PHASE IN CONFLICT WITH THIS PHASE ON (SEE CHART 1 BELOW)

* WHEN CALLED, TIMED STEADY WALK, THEN FLASHING DON'T WALK, THEN GOES TO STEADY DON'T WALK.

CHART 1

PHASE ON	NONCONFLICTING PHASE ALLOWED TO TIME CONCURRENTLY	PHASES IN CONFLICT WITH PHASE ON
01	5 OR 6	2,3,4,7,8
02	5 OR 6	1,3,4,7,8
03	7 OR 8	1,2,4,5,6
04	7 OR 8	1,2,3,5,6
05	1 OR 2	3,4,6,7,8
06	1 OR 2	3,4,5,7,8
07	3 OR 4	1,2,5,6,8
08	3 OR 4	1,2,5,6,7

DETECTOR LOGIC

DETECTOR NUMBER	AMPLIFIER CHANNEL NUMBER	DETECTOR OPERATION: CALLS AND EXTENDS	CALLS ONLY	EXTENDS ONLY	PHASE CALLED	PHASE EXTENDED	DETECTOR DISCONNECT PHASE	CALLING DELAY	EXTENSION STRETCH	SIZE	NUMBER OF TURNS
11	1			X		1			X	6'X20'	3
12	2	X			1	1				6'X20'	3
13	2	X			1	1				6'X20'	3
14	3	X			1	1				6'X20'	3
15	3	X			1	1				6'X20'	3
21	4	X			2	2				6'X20'	5
31	5			X		3			X	6'X6'	4
32	6	X			3	3				6'X20'	4
33	7	X			3	3				6'X20'	4
41	8			X		4			X	6'X20'	4
42	9	X			4	4				6'X20'	4
43	9	X			4	4				6'X20'	4
44	10	X			4	4		X		6'X20'	4
45	10	X			4	4		X		6'X20'	4
51	11			X	5	5			X	6'X6'	5
52	12	X			5	5				6'X20'	4
53	12	X			5	5				6'X20'	4
61	13	X			6	6				6'X20'	3
71	14			X		7			X	6'X6'	5
72	15	X			7	7				6'X20'	4
73	16	X			7	7				6'X20'	4
81	17			X		8			X	6'X20'	3
82	18	X			8	8				6'X20'	4
83	18	X			8	8				6'X20'	4
84	19	X			8	8		X		6'X20'	4
85	19	X			8	8		X		6'X20'	4

CONTROLLER LOGIC

PHASE NUMBER	PHASE LOCKING	DUAL ENTRY W / O	PHASE RECALL
1		6	
2	X	6	MIN.
3		8	
4		8	
5		2	
6	X	2	MIN.
7		4	
8		4	

OVERLAPS

O.L. "A" = NOT USED
O.L. "B" = NOT USED
O.L. "C" = NOT USED
O.L. "D" = NOT USED

TYPE OF INTERCONNECT	
NONE	X
TBC	
CLOSED LOOP	
HARDWIRE (7 WIRE)	
TONE (FREQ)	

TYPE OF PRE-EMPT	
NONE	X
RAILROAD	
EMERGENCY VEHICLE	

TYPE OF LIGHTING	
NONE	
IN TRAFFIC CONTROL CABINET	X
IN SEPARATE CONTROL CABINET	

NOTES

1) ANY ACTUATED PHASE FOR WHICH THERE IS NO CALL SHALL BE SKIPPED.

2) WHEN ONE PHASE IS ON ALONE, ANY NONCONFLICTING PHASE MAY START TIMING CONCURRENTLY WITHOUT A CLEARANCE INTERVAL. (SEE CHART 1 AT LEFT)

3) IF ANY OPPOSING THRU PHASES ARE TIMING CONCURRENTLY, THEY SHALL TERMINATE TOGETHER DUE TO PERMISSIVE LEFT TURN CONFLICT.

4) PROVIDE FOR HAND CONTROL (MANUAL) OPERATION.

TRAFFIC CONTROL SIGNAL

STH 83 AND CTH NN

SIGNAL NO. 336 SCALE 0 20

DISTRICT CONTACT: PAGE OF
DESIGNED BY:

LEVELS ON = 1,2,3,4,5,6,7,8,9,10,11,12,13,14,15,16,17,18,19,20,21,22,23,24,25,26,27,28,29,30,31,32,33,34,35,36,37,38,39,40,41,42,43,44,45,46,47,48,49,50,51,52,53,54,55,56,57,58,59,60,61,62,63

STATE PROJECT NUMBER: 1331-08-70	HWY: STH 83	COUNTY: WAUKESHA	SEQUENCE OF OPERATION	SCALE: N/A	SHEET NO:	E

APPENDIX A

TRAFFIC

A3. WisDOT Forecasts

WisDOT TRAFFIC FORECAST REPORT	Region/COUNTY(IES): SE / Waukesha	Developed by: Brent DesRoches
PROJECT ID(S): TIA 2835	LOCATION: Fairwinds to 83 to Black Bear	Phone: (262) 548-5611
ROUTE(S): STH 83, CTH NN	COMPLETED: October 27, 2015	FAX #: (262) 548-4425
Traffic Forecasting Section; Bureau of Planning and Economic Development; Division of Transportation Investment Management		E-Mail: brent.desroches@dot.wi.gov

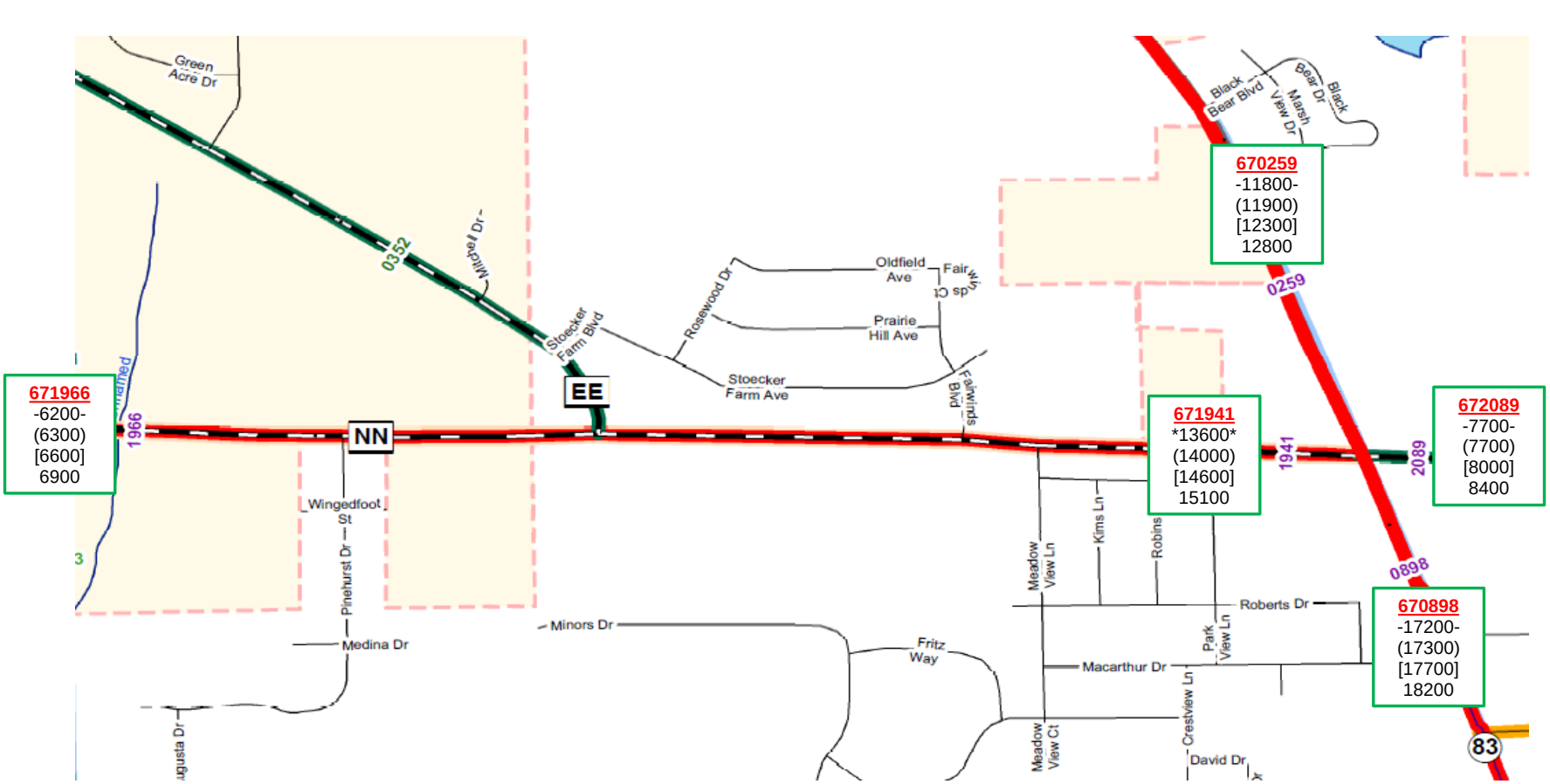

Site IDs are Colored, **Bolded**, and Underlined

Design Values (%)			
Site(s)	670898		
Route(s)	STH 83		
Volume(s)	18200		
Site Growth %	0.52%		
K250	10.1		
K100	10.8		
K30	11.4		
P	12.6		
D(Dsgn. Hr.)	59/41		
T(DHV)	6.1		
T(PHV)	5.3		

-000-	2015 Count	(000)	2016 AADT
000	2013 Count	[000]	2021 AADT
		000	2026 AADT
		/000/	XXXX AADT

Trucks	670898		
AADTT	1210		
2D	5.4		
3AX	0.4		
2S1+2S2	0.9		
3-S2	0.3		
DBL-BTM	0.1		
Total %	7.1%		

NOTES ON THE FORECAST:

1. This projection assumes no major new traffic generators will be added to the roadway network. New development will be added by the TIA consultant.

2. Truck classification percentages were taken from 2015 Wisconsin Vehicle Classification Data (Site # 670898).

MORE NOTES ON THE FORECAST:

3. STH 83 and CTH NN are Factor Group II (Urban-Other) highways (indicating low to moderate fluctuation in traffic from a seasonal perspective). Each is functionally classified as an Urban Principal Arterial (14) for count purposes.

4. The Traffic Analysis Forecasting Information System output was used as a comparison tool to check against the history. Adjustments were made as needed.

WisDOT SE Region Planning
Traffic Forecasting Section
Forecast by: Brent DesRoches
Phone: 262-548-5611
Email: brent.desroches@dot.wi.gov

Projected AM Design Hour Traffic Volumes

Indicates roundabout

Design Hour: 6:45-7:45am

Forecast Completed: 10/27/2015

Design Hour Turning Movement Data

Project Description

Project ID(s): TIA 2835
Route(s): STH 83, CTH NN
Region/COUNTY(IES): SE / Waukesha
Location: Fairwinds Blvd to STH 83 to Black Bear E

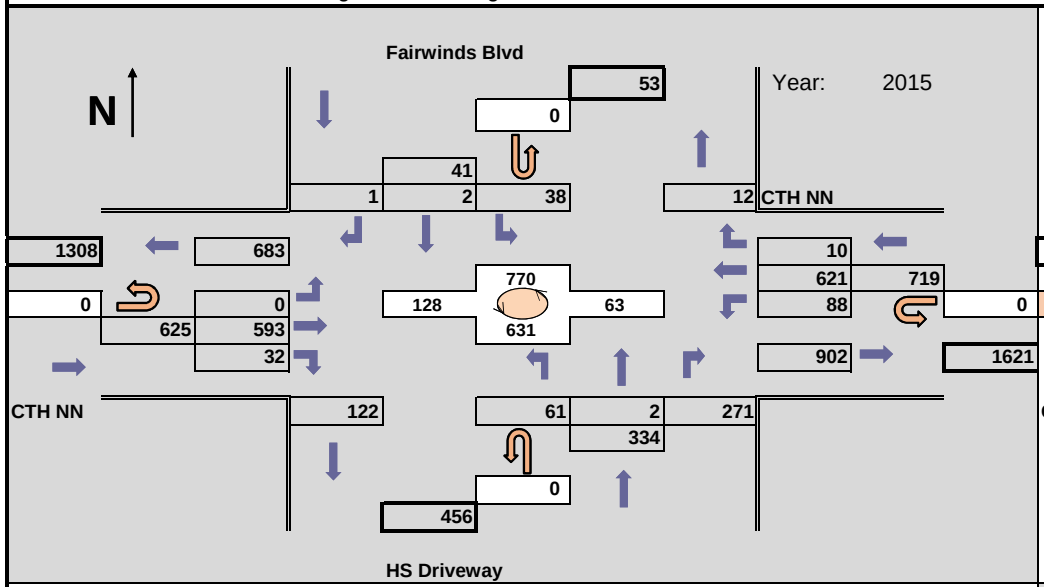

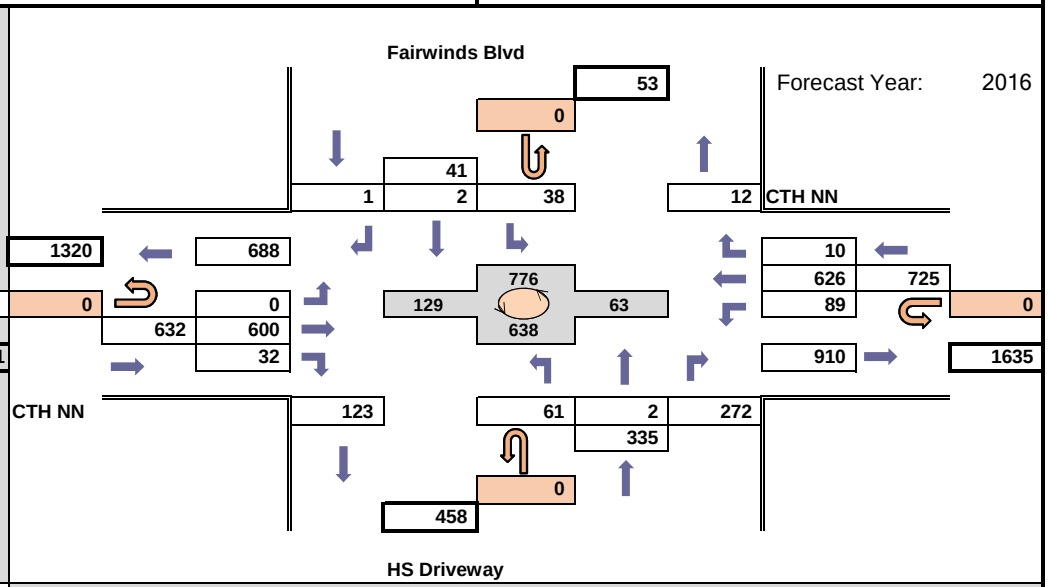

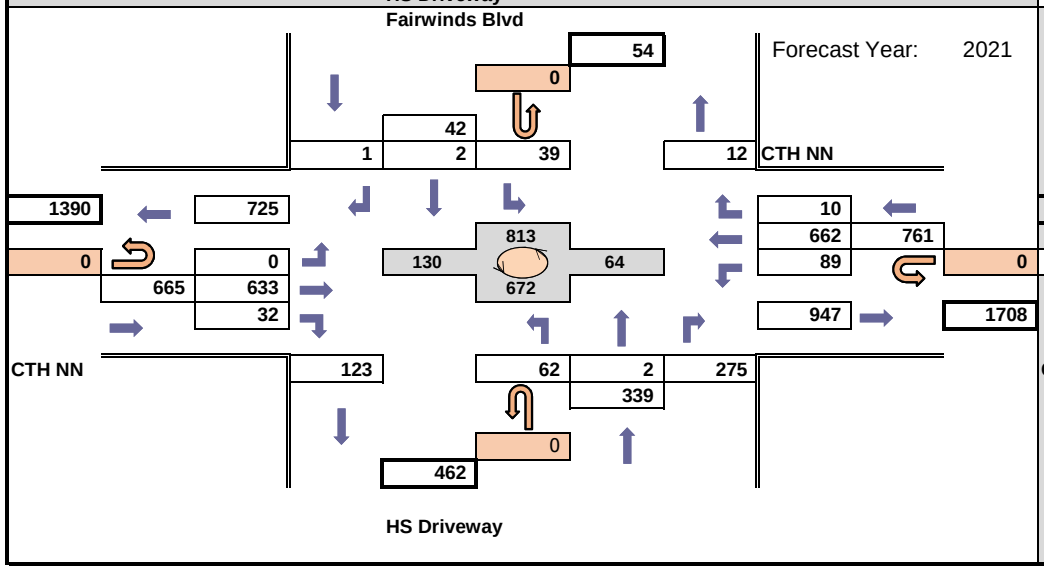

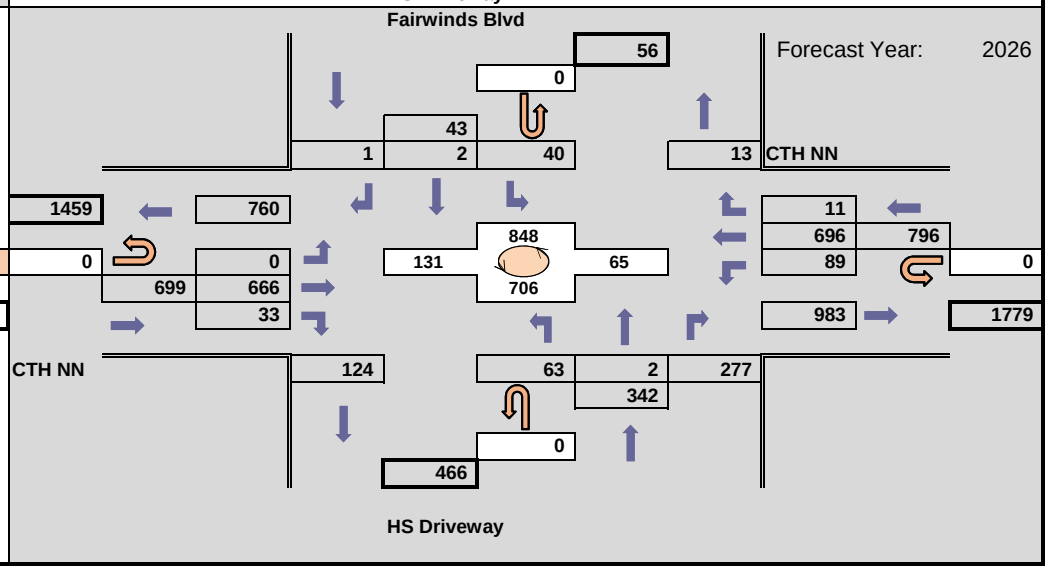

WisDOT SE Region Planning
Traffic Forecasting Section
Forecast by: Brent DesRoches
Phone: 262-548-5611
Email: brent.desroches@dot.wi.gov

Projected PM Design Hour Traffic Volumes

Indicates roundabout

Design Hour: 4:45-5:45pm

Forecast Completed: 10/27/2015

Project Description

Project ID(s): TIA 2835
Route(s): STH 83, CTH NN
Region/COUNTY(IES): SE / Waukesha
Location: Fairwinds Blvd to STH 83 to Black Bear E

Design Hour Turning Movement Data

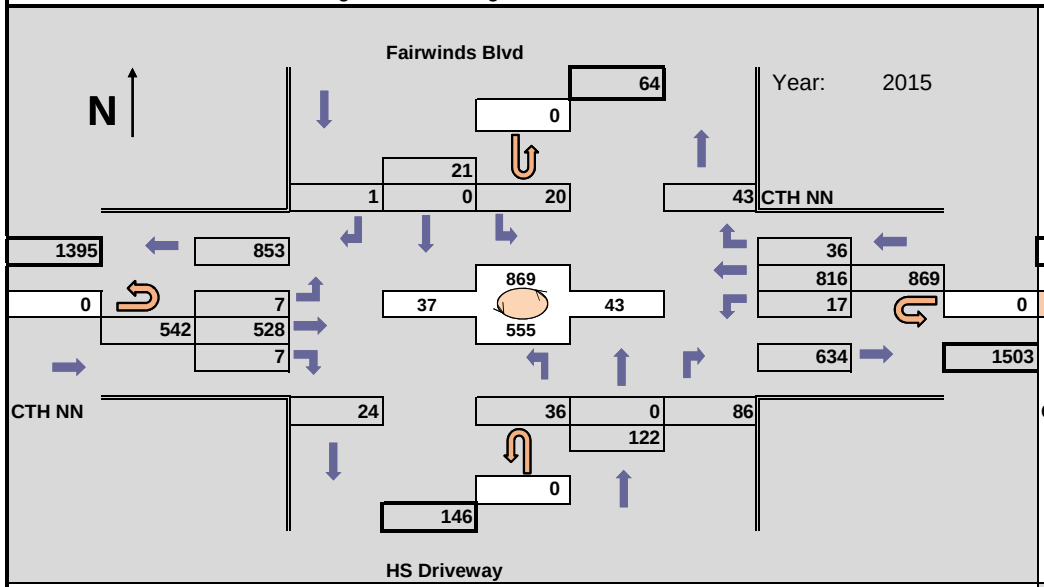

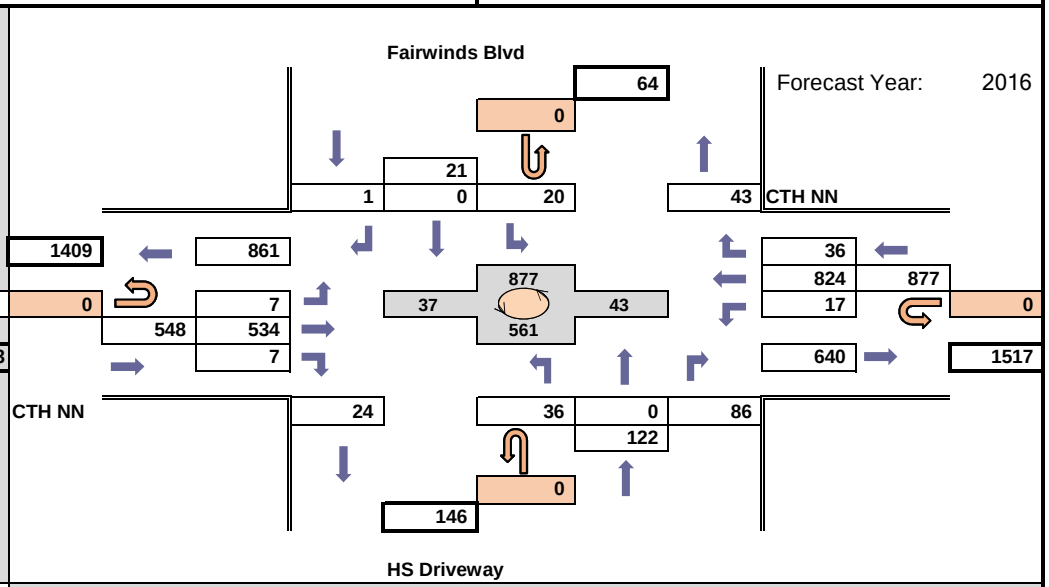

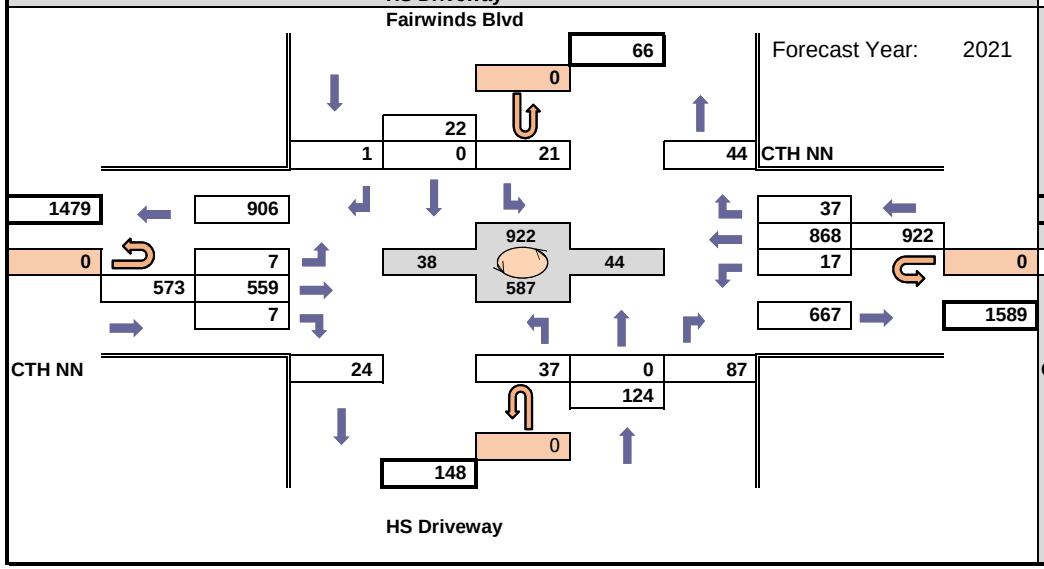

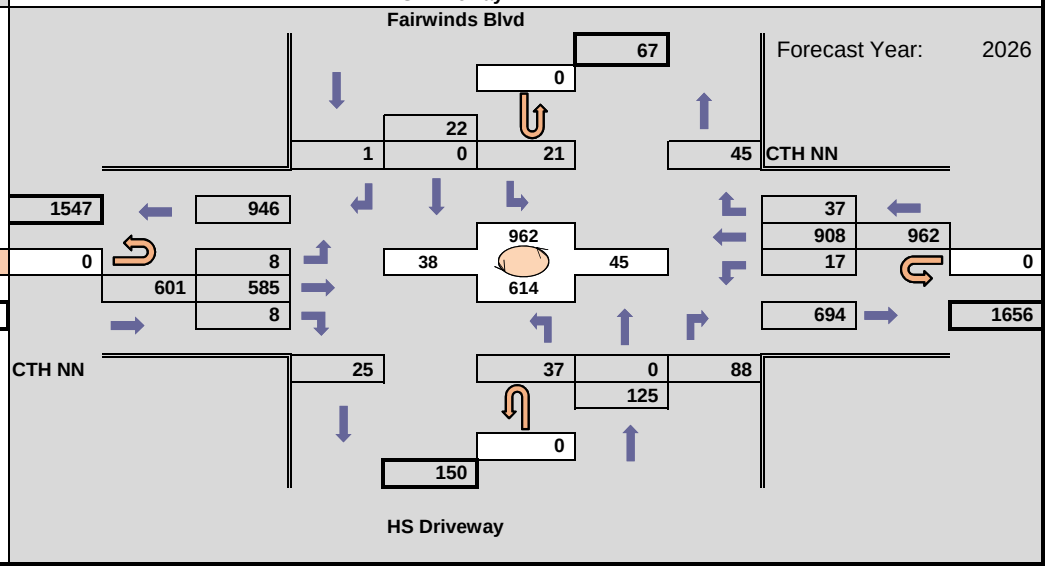

WisDOT SE Region Planning
Traffic Forecasting Section
Forecast by: Brent DesRoches
Phone: 262-548-5611
Email: brent.desroches@dot.wi.gov

Projected AM Design Hour Traffic Volumes

Indicates roundabout

Design Hour: 6:45-7:45am

Forecast Completed: 10/27/2015

Project Description

Project ID(s): TIA 2835
Route(s): STH 83, CTH NN
Region/COUNTY(IES): SE / Waukesha
Location: Fairwinds Blvd to STH 83 to Black Bear B

Design Hour Turning Movement Data

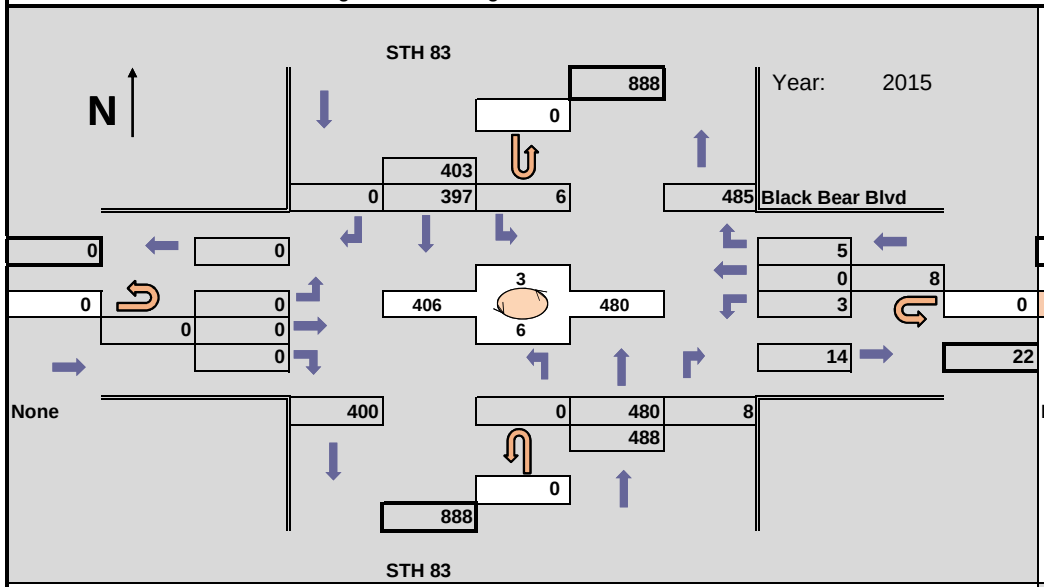

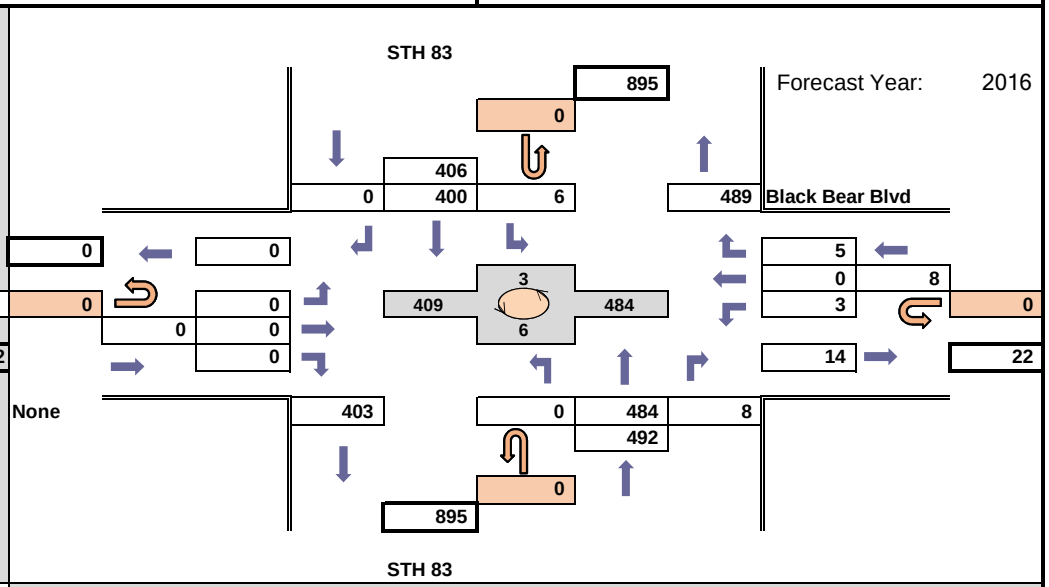

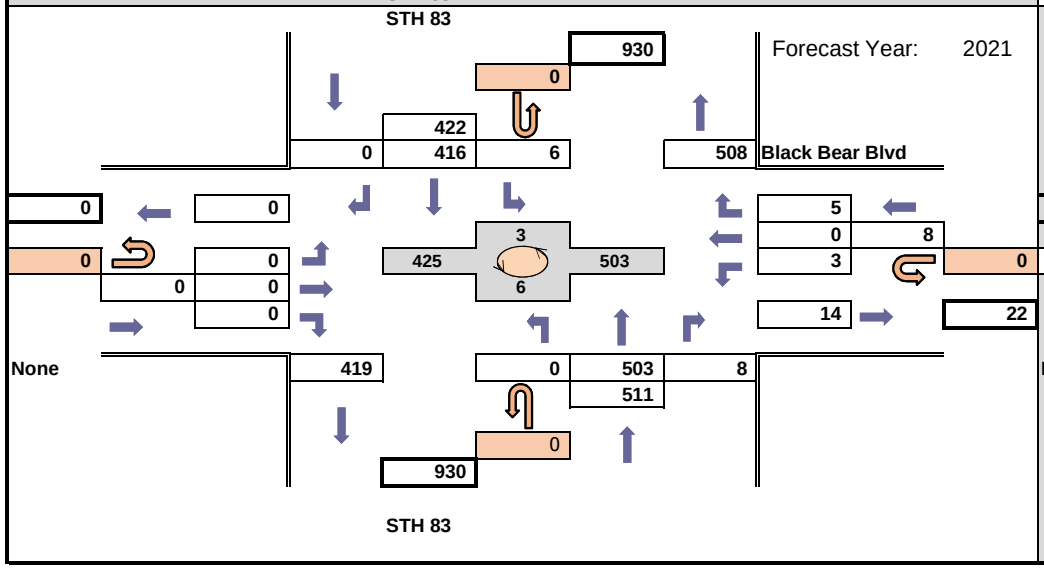

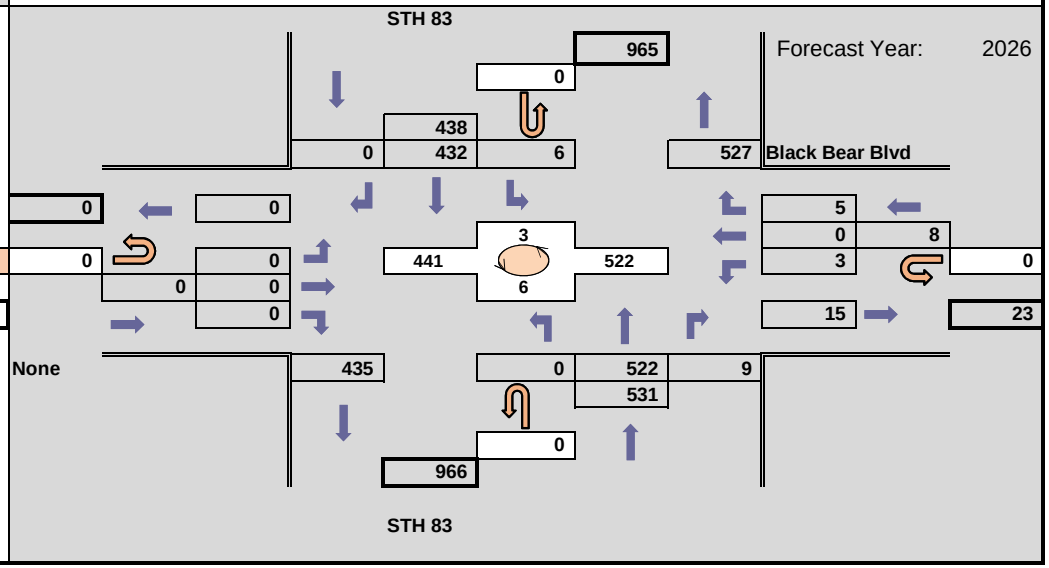

WisDOT SE Region Planning
Traffic Forecasting Section
Forecast by: Brent DesRoches
Phone: 262-548-5611
Email: brent.desroches@dot.wi.gov

Projected PM Design Hour Traffic Volumes

Indicates roundabout

Design Hour: 4:45-5:45pm

Forecast Completed: 10/27/2015

Project Description

Project ID(s): TIA 2835
Route(s): STH 83, CTH NN
Region/COUNTY(IES): SE / Waukesha
Location: Fairwinds Blvd to STH 83 to Black Bear B

Design Hour Turning Movement Data

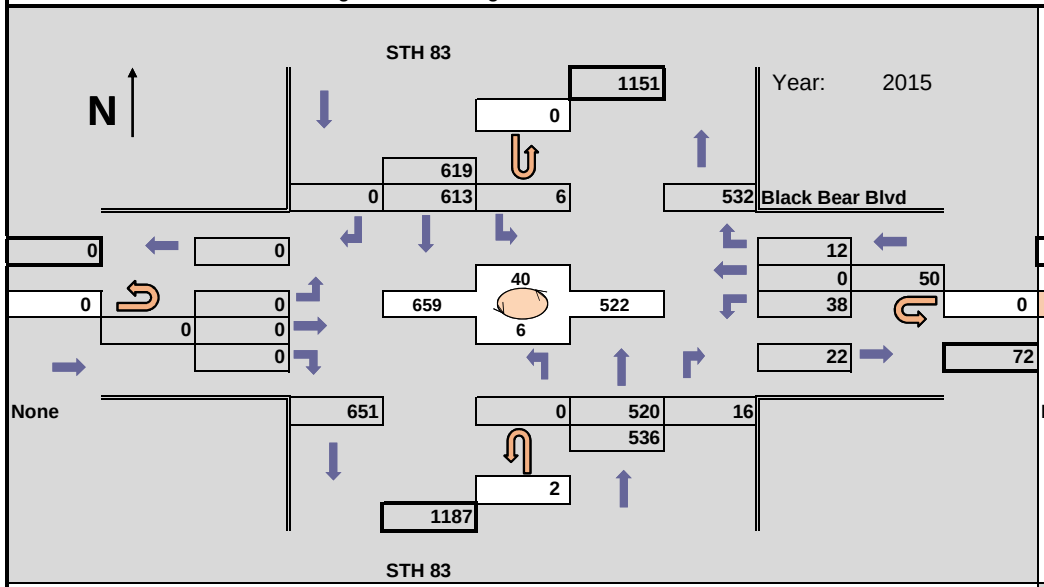

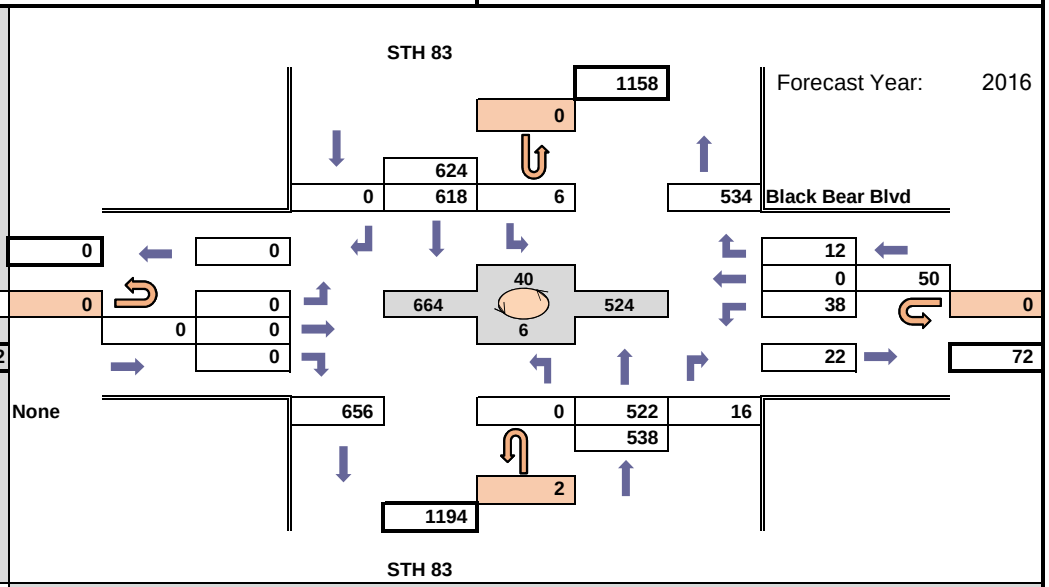

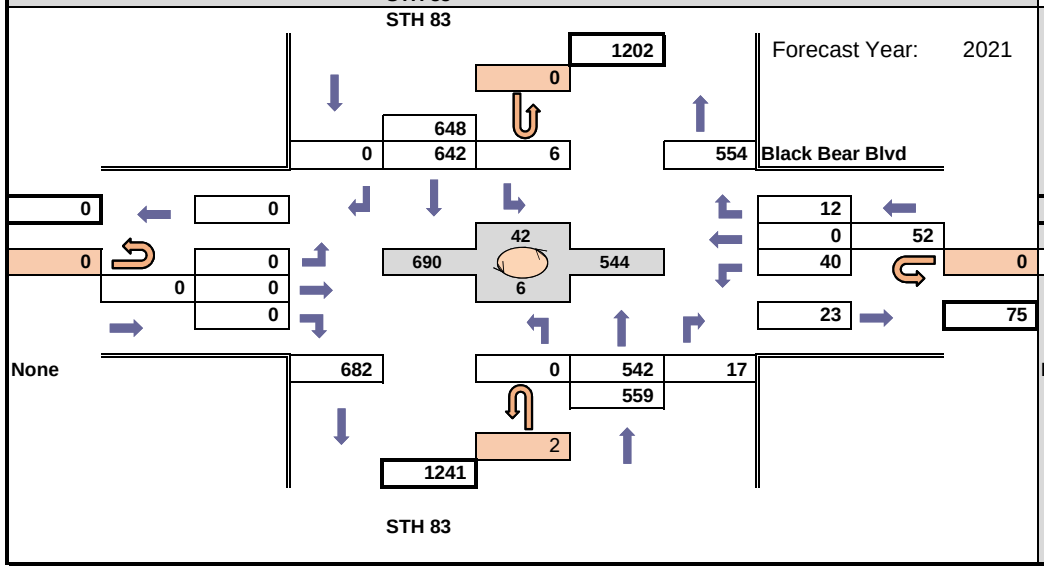

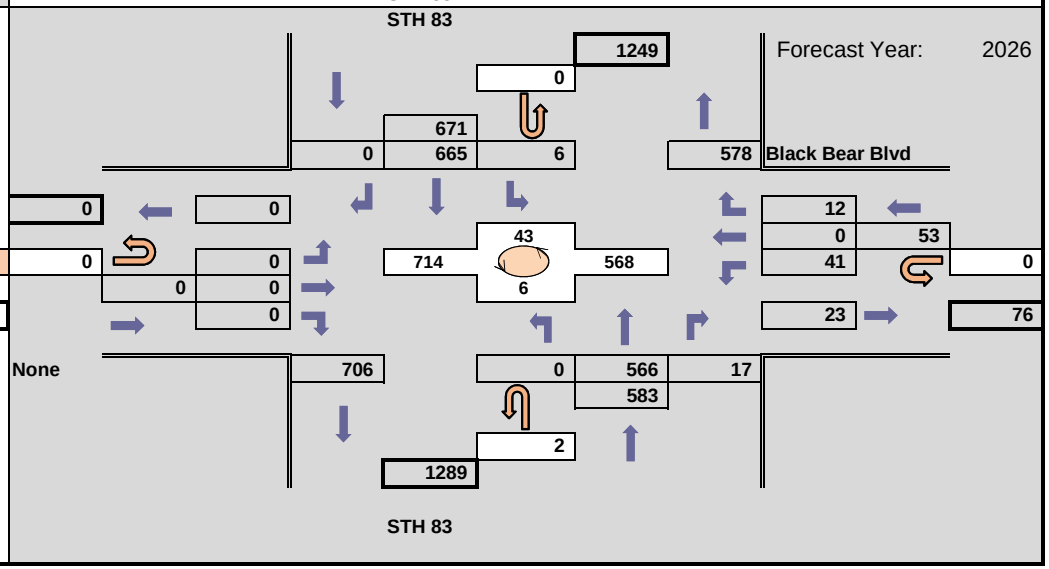

WisDOT SE Region Planning
Traffic Forecasting Section
Forecast by: Brent DesRoches
Phone: 262-548-5611
Email: brent.desroches@dot.wi.gov

Projected AM Design Hour Traffic Volumes

Indicates roundabout

Design Hour: 6:45-7:45am

Forecast Completed: 10/27/2015

Project Description

Project ID(s): TIA 2835
Route(s): STH 83, CTH NN
Region/COUNTY(IES): SE / Waukesha
Location: Fairwinds Blvd to STH 83 to Black Bear E

Design Hour Turning Movement Data

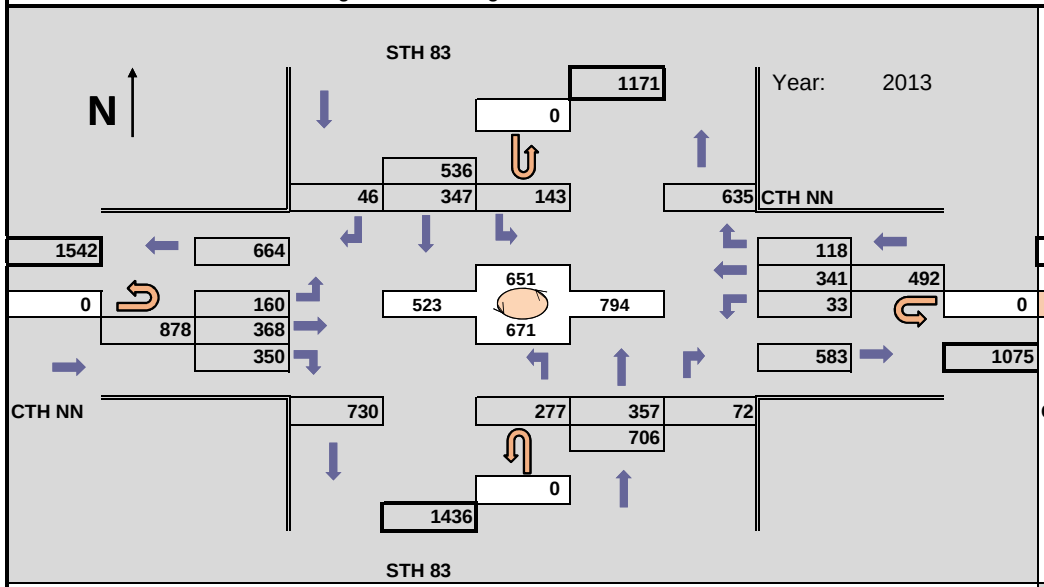

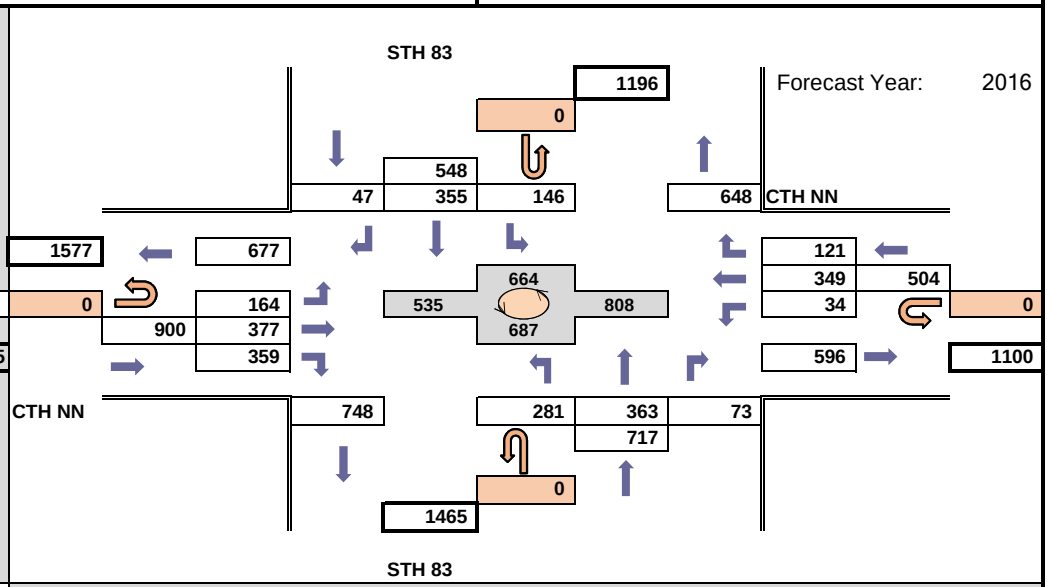

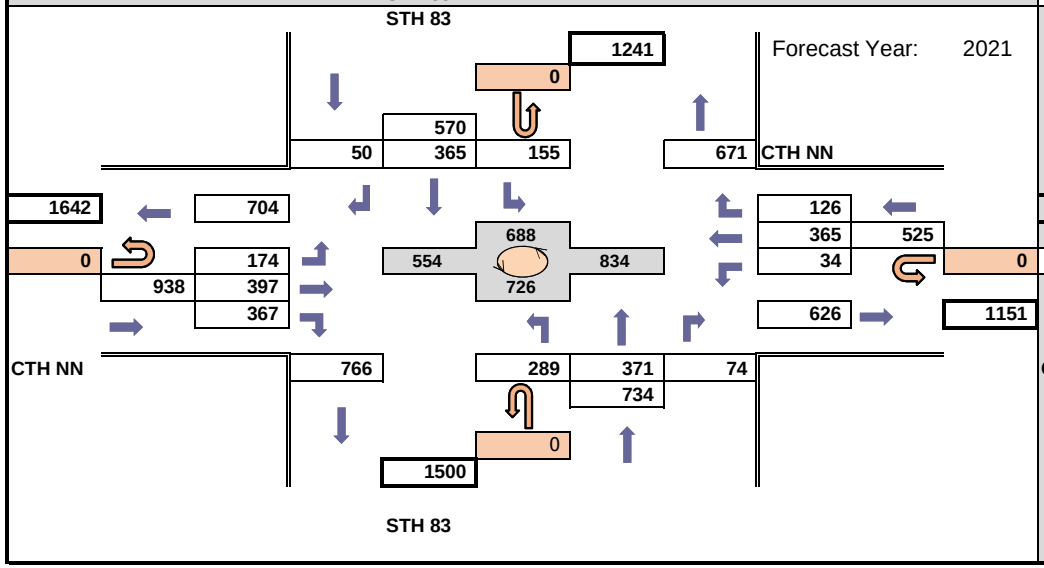

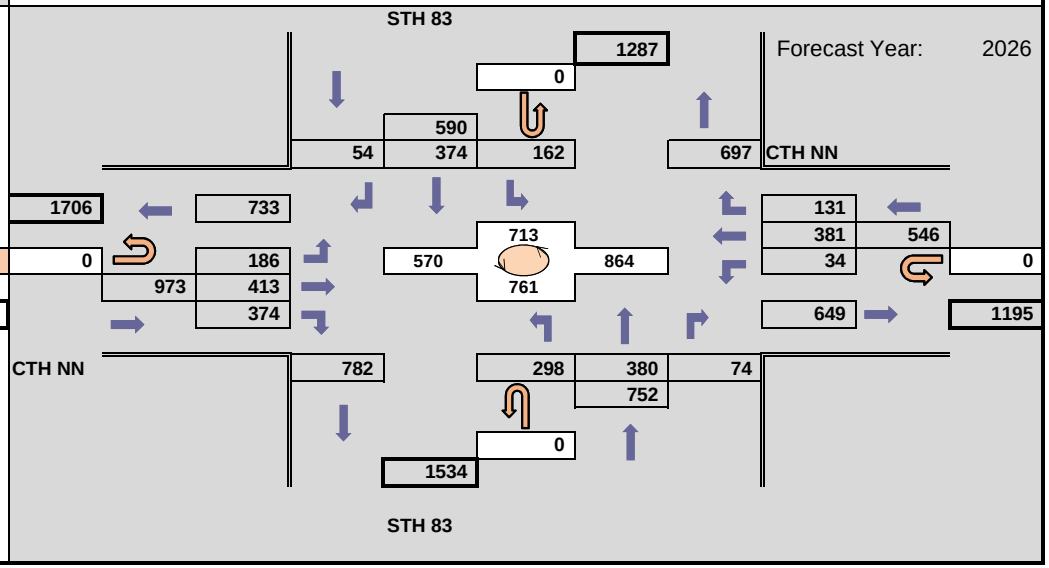

WisDOT SE Region Planning
Traffic Forecasting Section
Forecast by: Brent DesRoches
Phone: 262-548-5611
Email: brent.desroches@dot.wi.gov

Projected PM Design Hour Traffic Volumes

Indicates roundabout

Design Hour: 4:45-5:45pm

Forecast Completed: 10/27/2015

Project Description

Project ID(s): TIA 2835
Route(s): STH 83, CTH NN
Region/COUNTY(IES): SE / Waukesha
Location: Fairwinds Blvd to STH 83 to Black Bear E

Design Hour Turning Movement Data

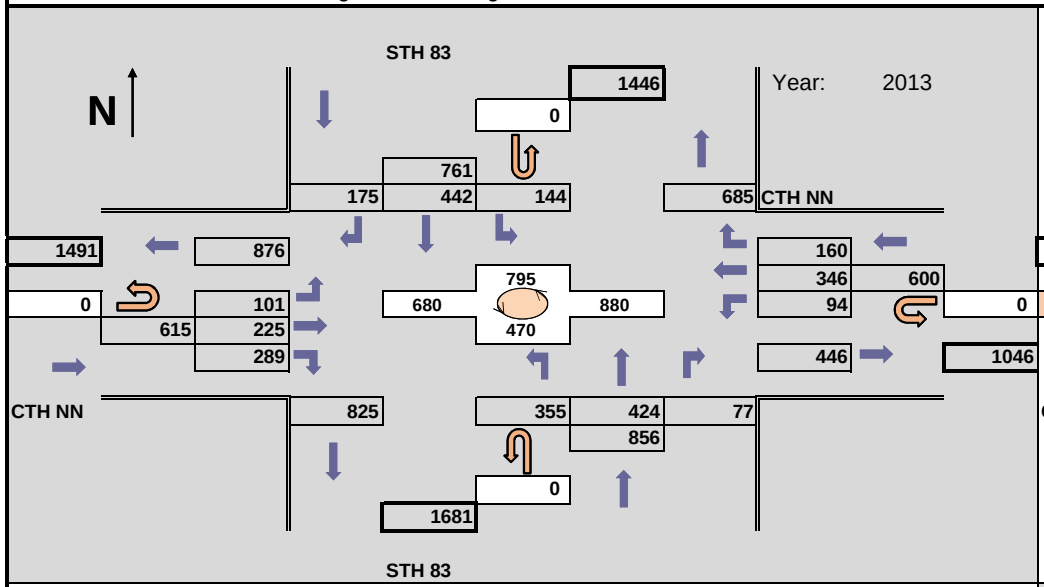

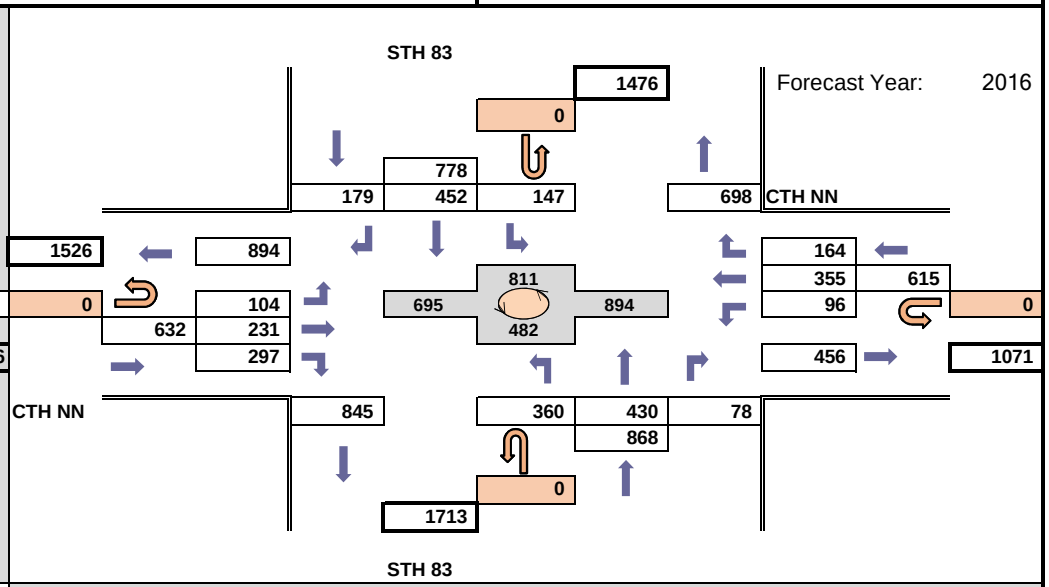

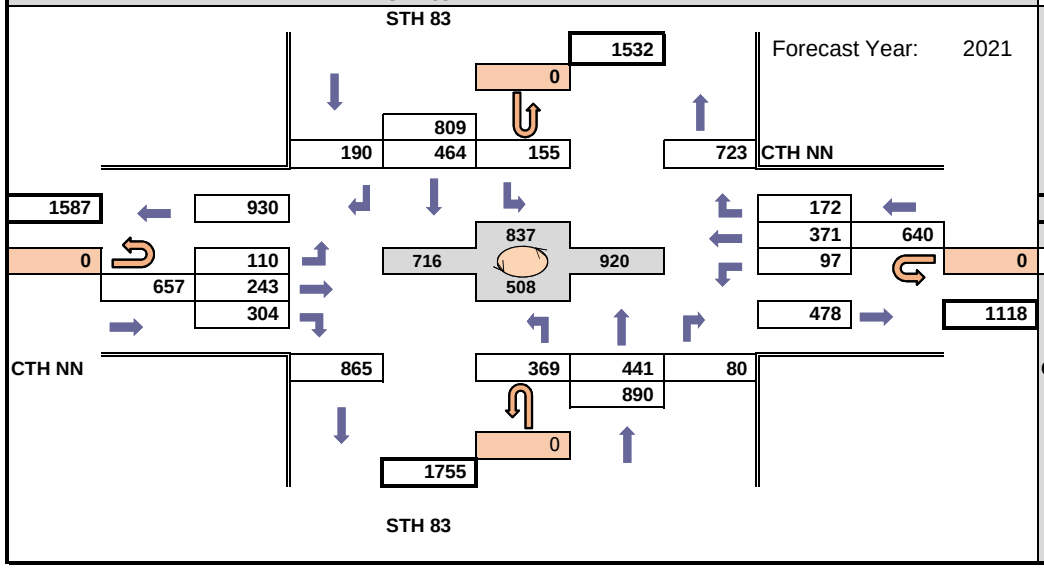

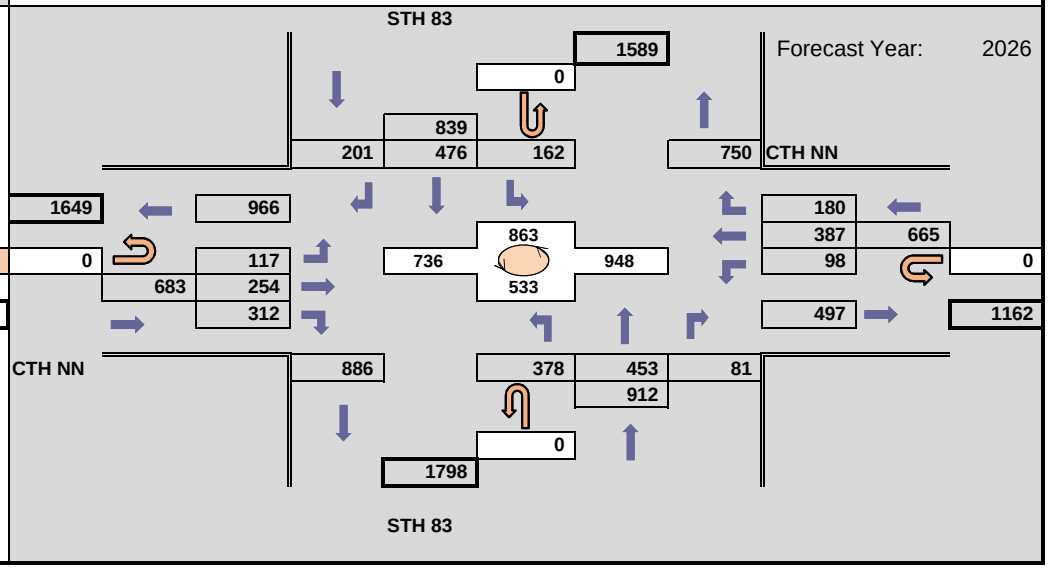

APPENDIX B

EXISTING TRANSPORTATION SYSTEM WITH BACKGROUND TRAFFIC OPERATIONAL ANALYSIS

B1. Base Year 2016 Background Traffic

Lane Group	WBL	WBR	NBT	NBR	SBL	SBT
Lane Configurations						
Volume (vph)	5	5	640	10	5	540
Ideal Flow (vphpl)	1900	1900	1900	1900	1900	1900
Lane Width (ft)	12	12	12	12	12	12
Grade (%)	0%		0%			0%
Storage Length (ft)	0	0		225	390	
Storage Lanes	1	1		1	1	
Taper Length (ft)	100				100	
Link Speed (mph)	25		35			35
Link Distance (ft)	580		2325			691
Travel Time (s)	15.8		45.3			13.5
Confl. Peds. (#/hr)						
Confl. Bikes (#/hr)						
Peak Hour Factor	0.88	0.88	0.88	0.88	0.88	0.88
Growth Factor	100%	100%	100%	100%	100%	100%
Heavy Vehicles (%)	25%	25%	5%	5%	7%	7%
Bus Blockages (#/hr)	0	0	0	0	0	0
Parking (#/hr)						
Mid-Block Traffic (%)	0%		0%			0%
Shared Lane Traffic (%)						
Lane Group Flow (vph)	6	6	727	11	6	614
Sign Control	Stop		Free			Free

Intersection Summary	
Area Type:	Other
Control Type: Unsignalized	

Intersection	
Int Delay, s/veh	0.2

Movement	WBL	WBR	NBT	NBR	SBL	SBT
Vol, veh/h	5	5	640	10	5	540
Conflicting Peds, #/hr	0	0	0	0	0	0
Sign Control	Stop	Stop	Free	Free	Free	Free
RT Channelized	-	None	-	None	-	None
Storage Length	0	0	-	225	390	-
Veh in Median Storage, #	2	-	0	-	-	0
Grade, %	0	-	0	-	-	0
Peak Hour Factor	88	88	88	88	88	88
Heavy Vehicles, %	25	25	5	5	7	7
Mvmt Flow	6	6	727	11	6	614

Major/Minor	Minor1		Major1		Major2	
Conflicting Flow All	1045	364	0	0	727	0
Stage 1	727	-	-	-	-	-
Stage 2	318	-	-	-	-	-
Critical Hdwy	7.3	7.4	-	-	4.24	-
Critical Hdwy Stg 1	6.3	-	-	-	-	-
Critical Hdwy Stg 2	6.3	-	-	-	-	-
Follow-up Hdwy	3.75	3.55	-	-	2.27	-
Pot Cap-1 Maneuver	189	571	-	-	840	-
Stage 1	384	-	-	-	-	-
Stage 2	646	-	-	-	-	-
Platoon blocked, %			-	-		-
Mov Cap-1 Maneuver	188	571	-	-	840	-
Mov Cap-2 Maneuver	343	-	-	-	-	-
Stage 1	384	-	-	-	-	-
Stage 2	641	-	-	-	-	-

Approach	WB	NB	SB
HCM Control Delay, s	13.6	0	0.1
HCM LOS	B		

Minor Lane/Major Mvmt	NBT	NBR	WBLn1	WBLn2	SBL	SBT
Capacity (veh/h)	-	-	343	571	840	-
HCM Lane V/C Ratio	-	-	0.017	0.01	0.007	-
HCM Control Delay (s)	-	-	15.7	11.4	9.3	-
HCM Lane LOS	-	-	C	B	A	-
HCM 95th %tile Q(veh)	-	-	0.1	0	0	-

Lane Group	EBL	EBT	EBR	WBL	WBT	WBR	NBL	NBT	NBR	SBL	SBT	SBR
Lane Configurations												
Volume (vph)	165	375	360	35	350	120	280	365	75	145	355	45
Ideal Flow (vphpl)	1900	1900	1900	1900	1900	1900	1900	1900	1900	1900	1900	1900
Lane Width (ft)	12	12	12	12	12	12	12	12	12	12	12	12
Grade (%)		0%			0%			0%			0%	
Storage Length (ft)	210		430	215		0	260		55	240		90
Storage Lanes	1		1	1		0	2		1	1		1
Taper Length (ft)	100			100			100			100		
Right Turn on Red			No			No			No			No
Link Speed (mph)		40			40			35			35	
Link Distance (ft)		2258			1339			1052			2325	
Travel Time (s)		38.5			22.8			20.5			45.3	
Confl. Peds. (#/hr)												
Confl. Bikes (#/hr)												
Peak Hour Factor	0.81	0.81	0.81	0.81	0.81	0.81	0.81	0.81	0.81	0.81	0.81	0.81
Growth Factor	100%	100%	50%	100%	100%	100%	100%	100%	50%	100%	100%	50%
Heavy Vehicles (%)	5%	5%	5%	5%	5%	5%	10%	10%	10%	7%	7%	7%
Bus Blockages (#/hr)	0	0	0	0	0	0	0	0	0	0	0	0
Parking (#/hr)												
Mid-Block Traffic (%)		0%			0%			0%			0%	
Shared Lane Traffic (%)												
Lane Group Flow (vph)	204	463	222	43	580	0	346	451	46	179	438	28
Turn Type	pm+pt	NA	Perm	pm+pt	NA		Prot	NA	Perm	Prot	NA	Perm
Protected Phases	7	4		3	8		1	6		5	2	
Permitted Phases	4		4	8					6			2
Detector Phase	7	4	4	3	8		1	6	6	5	2	2
Switch Phase												
Minimum Initial (s)	6.0	8.0	8.0	6.0	8.0		8.0	15.0	15.0	6.0	15.0	15.0
Minimum Split (s)	10.5	48.6	48.6	10.5	50.6		12.5	45.4	45.4	10.5	50.4	50.4
Total Split (s)	24.5	36.6	36.6	24.5	36.6		24.5	46.4	46.4	24.5	46.4	46.4
Total Split (%)	18.6%	27.7%	27.7%	18.6%	27.7%		18.6%	35.2%	35.2%	18.6%	35.2%	35.2%
Maximum Green (s)	20.0	30.0	30.0	20.0	30.0		20.0	40.0	40.0	20.0	40.0	40.0
Yellow Time (s)	3.5	4.0	4.0	3.5	4.0		3.5	3.9	3.9	3.5	3.9	3.9
All-Red Time (s)	1.0	2.6	2.6	1.0	2.6		1.0	2.5	2.5	1.0	2.5	2.5
Lost Time Adjust (s)	0.0	0.0	0.0	0.0	0.0		0.0	0.0	0.0	0.0	0.0	0.0
Total Lost Time (s)	4.5	6.6	6.6	4.5	6.6		4.5	6.4	6.4	4.5	6.4	6.4
Lead/Lag	Lead	Lag	Lag	Lead	Lag		Lead	Lag	Lag	Lead	Lag	Lag
Lead-Lag Optimize?												
Vehicle Extension (s)	1.5	1.5	1.5	1.5	1.5		1.5	4.3	4.3	1.5	3.4	3.4
Minimum Gap (s)	1.5	1.5	1.5	1.5	1.5		1.5	2.0	2.0	1.5	2.0	2.0
Time Before Reduce (s)	20.0	30.0	30.0	20.0	30.0		20.0	19.0	19.0	20.0	20.0	20.0
Time To Reduce (s)	0.0	0.0	0.0	0.0	0.0		0.0	21.0	21.0	0.0	20.0	20.0
Recall Mode	None	None	None	None	None		None	Min	Min	None	Min	Min
Walk Time (s)		7.0	7.0		7.0			7.0	7.0		7.0	7.0
Flash Dont Walk (s)		35.0	35.0		37.0			32.0	32.0		37.0	37.0
Pedestrian Calls (#/hr)		0	0		0			0	0		0	0
v/c Ratio	0.55	0.70	0.40	0.14	0.72		0.71	0.60	0.14	0.70	0.57	0.08
Control Delay	23.0	35.0	27.7	18.3	39.9		48.3	37.6	33.6	55.9	36.9	33.0
Queue Delay	0.0	0.0	0.0	0.0	0.0		0.0	0.0	0.0	0.0	0.0	0.0

Lane Group	EBL	EBT	EBR	WBL	WBT	WBR	NBL	NBT	NBR	SBL	SBT	SBR
Total Delay	23.0	35.0	27.7	18.3	39.9		48.3	37.6	33.6	55.9	36.9	33.0
Queue Length 50th (ft)	71	245	102	14	160		100	126	22	101	122	13
Queue Length 95th (ft)	128	375	176	35	247		161	194	55	185	187	39
Internal Link Dist (ft)		2178			1259			972			2245	
Turn Bay Length (ft)	210		430	215			260		55	240		90
Base Capacity (vph)	486	658	559	536	1099		705	1454	650	373	1495	669
Starvation Cap Reductn	0	0	0	0	0		0	0	0	0	0	0
Spillback Cap Reductn	0	0	0	0	0		0	0	0	0	0	0
Storage Cap Reductn	0	0	0	0	0		0	0	0	0	0	0
Reduced v/c Ratio	0.42	0.70	0.40	0.08	0.53		0.49	0.31	0.07	0.48	0.29	0.04

Intersection Summary

Area Type: Other
Cycle Length: 132
Actuated Cycle Length: 93.4
Natural Cycle: 125
Control Type: Actuated-Uncoordinated
Description: Runs Free. PB all app. Ped interval reduced to max green for HCM output.

Splits and Phases: 200: STH 83/Rochester Street & CTH N

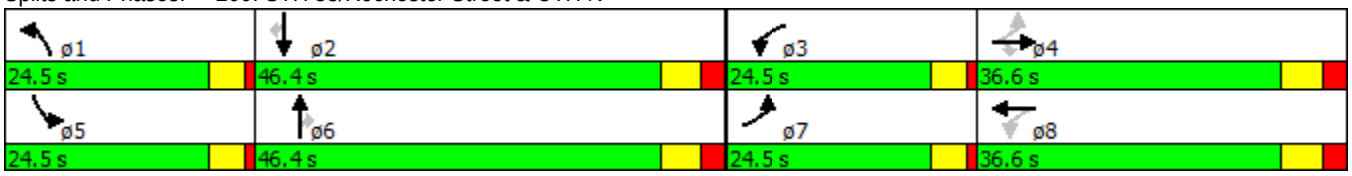

Movement	EBL	EBT	EBR	WBL	WBT	WBR	NBL	NBT	NBR	SBL	SBT	SBR
Lane Configurations												
Volume (veh/h)	165	375	360	35	350	120	280	365	75	145	355	45
Number	7	4	14	3	8	18	1	6	16	5	2	12
Initial Q (Qb), veh	0	0	0	0	0	0	0	0	0	0	0	0
Ped-Bike Adj(A_pbT)	1.00		1.00	1.00		1.00	1.00		1.00	1.00		1.00
Parking Bus, Adj	1.00	1.00	1.00	1.00	1.00	1.00	1.00	1.00	1.00	1.00	1.00	1.00
Adj Sat Flow, veh/h/ln	1810	1810	1810	1810	1810	1900	1727	1727	1727	1776	1776	1776
Adj Flow Rate, veh/h	204	463	222	43	432	148	346	451	46	179	438	28
Adj No. of Lanes	1	1	1	1	2	0	2	2	1	1	2	1
Peak Hour Factor	0.81	0.81	0.81	0.81	0.81	0.81	0.81	0.81	0.81	0.81	0.81	0.81
Percent Heavy Veh, %	5	5	5	5	5	5	10	10	10	7	7	7
Cap, veh/h	337	536	456	208	585	199	428	848	379	215	847	379
Arrive On Green	0.11	0.30	0.30	0.05	0.23	0.23	0.13	0.26	0.26	0.13	0.25	0.25
Sat Flow, veh/h	1723	1810	1538	1723	2522	856	3191	3282	1468	1691	3374	1509
Grp Volume(v), veh/h	204	463	222	43	293	287	346	451	46	179	438	28
Grp Sat Flow(s),veh/h/ln	1723	1810	1538	1723	1719	1658	1596	1641	1468	1691	1687	1509
Q Serve(g_s), s	6.9	19.5	9.6	1.5	12.8	13.0	8.5	9.5	1.9	8.3	9.0	1.1
Cycle Q Clear(g_c), s	6.9	19.5	9.6	1.5	12.8	13.0	8.5	9.5	1.9	8.3	9.0	1.1
Prop In Lane	1.00		1.00	1.00		0.52	1.00		1.00	1.00		1.00
Lane Grp Cap(c), veh/h	337	536	456	208	399	385	428	848	379	215	847	379
V/C Ratio(X)	0.61	0.86	0.49	0.21	0.73	0.75	0.81	0.53	0.12	0.83	0.52	0.07
Avail Cap(c_a), veh/h	574	672	571	556	639	616	790	1626	727	419	1671	748
HCM Platoon Ratio	1.00	1.00	1.00	1.00	1.00	1.00	1.00	1.00	1.00	1.00	1.00	1.00
Upstream Filter(I)	1.00	1.00	1.00	1.00	1.00	1.00	1.00	1.00	1.00	1.00	1.00	1.00
Uniform Delay (d), s/veh	20.2	26.9	23.4	22.9	28.7	28.8	34.0	25.8	22.9	34.4	26.0	23.1
Incr Delay (d2), s/veh	0.7	8.0	0.3	0.2	1.0	1.1	1.4	0.8	0.2	3.2	0.6	0.1
Initial Q Delay(d3),s/veh	0.0	0.0	0.0	0.0	0.0	0.0	0.0	0.0	0.0	0.0	0.0	0.0
%ile BackOfQ(50%),veh/ln	3.3	11.0	4.1	0.7	6.1	6.0	3.8	4.4	0.8	4.1	4.3	0.5
LnGrp Delay(d),s/veh	20.9	34.9	23.7	23.1	29.7	29.9	35.3	26.6	23.2	37.6	26.6	23.2
LnGrp LOS	C	C	C	C	C	C	D	C	C	D	C	C
Approach Vol, veh/h		889			623			843			645	
Approach Delay, s/veh		28.9			29.3			30.0			29.5	
Approach LOS		C			C			C			C	

Timer	1	2	3	4	5	6	7	8
Assigned Phs	1	2	3	4	5	6	7	8
Phs Duration (G+Y+Rc), s	15.3	26.7	8.2	30.5	14.8	27.3	13.4	25.3
Change Period (Y+Rc), s	4.5	6.4	4.5	6.6	4.5	6.4	4.5	6.6
Max Green Setting (Gmax), s	20.0	40.0	20.0	30.0	20.0	40.0	20.0	30.0
Max Q Clear Time (g_c+I1), s	10.5	11.0	3.5	21.5	10.3	11.5	8.9	15.0
Green Ext Time (p_c), s	0.3	9.3	0.0	2.4	0.1	9.2	0.1	2.9

Intersection Summary	
HCM 2010 Ctrl Delay	29.4
HCM 2010 LOS	C

Notes

User approved pedestrian interval to be less than phase max green.

Lane Group	EBL	EBT	EBR	WBL	WBT	WBR	NBL	NBT	NBR	SBL	SBT	SBR
Lane Configurations												
Volume (vph)	1	590	30	90	575	10	60	1	270	40	1	1
Ideal Flow (vphpl)	1900	1900	1900	1900	1900	1900	1900	1900	1900	1900	1900	1900
Lane Width (ft)	12	12	12	12	12	12	12	12	12	12	12	12
Grade (%)		0%			0%			0%			0%	
Storage Length (ft)	200		0	100		0	0		100	0		0
Storage Lanes	1		0	1		0	0		1	0		0
Taper Length (ft)	100			100			100			100		
Right Turn on Red			No			No			No			No
Link Speed (mph)		40			40			25			25	
Link Distance (ft)		1050			2258			303			468	
Travel Time (s)		17.9			38.5			8.3			12.8	
Confl. Peds. (#/hr)												
Confl. Bikes (#/hr)												
Peak Hour Factor	0.72	0.72	0.72	0.72	0.72	0.72	0.72	0.72	0.72	0.72	0.72	0.72
Growth Factor	100%	100%	100%	100%	100%	100%	100%	100%	50%	100%	100%	100%
Heavy Vehicles (%)	2%	2%	2%	5%	5%	5%	12%	12%	12%	2%	2%	2%
Bus Blockages (#/hr)	0	0	0	0	0	0	0	0	0	0	0	0
Parking (#/hr)												
Mid-Block Traffic (%)		0%			0%			0%			0%	
Shared Lane Traffic (%)												
Lane Group Flow (vph)	1	861	0	125	813	0	0	84	188	0	58	0
Turn Type	Perm	NA		pm+pt	NA		Perm	NA	Perm	Perm	NA	
Protected Phases		6		5	2			8			4	
Permitted Phases	6			2			8		8	4		
Detector Phase	6	6		5	2		8	8	8	4	4	
Switch Phase												
Minimum Initial (s)	15.0	15.0		6.0	7.0		6.0	6.0	6.0	6.0	6.0	
Minimum Split (s)	25.7	25.7		11.7	25.7		24.0	24.0	24.0	24.0	24.0	
Total Split (s)	65.7	65.7		30.7	65.7		34.0	34.0	34.0	34.0	34.0	
Total Split (%)	50.4%	50.4%		23.5%	50.4%		26.1%	26.1%	26.1%	26.1%	26.1%	
Maximum Green (s)	60.0	60.0		25.0	60.0		30.0	30.0	30.0	30.0	30.0	
Yellow Time (s)	4.5	4.5		4.5	4.5		3.0	3.0	3.0	3.0	3.0	
All-Red Time (s)	1.2	1.2		1.2	1.2		1.0	1.0	1.0	1.0	1.0	
Lost Time Adjust (s)	0.0	0.0		0.0	0.0			0.0	0.0		0.0	
Total Lost Time (s)	5.7	5.7		5.7	5.7			4.0	4.0		4.0	
Lead/Lag	Lag	Lag		Lead								
Lead-Lag Optimize?												
Vehicle Extension (s)	5.5	5.5		4.5	5.5		3.0	3.0	3.0	3.0	3.0	
Minimum Gap (s)	2.0	2.0		0.2	2.0		1.5	1.5	1.5	1.5	1.5	
Time Before Reduce (s)	0.0	0.0		0.0	0.0		0.0	0.0	0.0	0.0	0.0	
Time To Reduce (s)	0.0	0.0		0.0	0.0		0.0	0.0	0.0	0.0	0.0	
Recall Mode	Min	Min		None	Min		None	None	None	None	None	
Walk Time (s)	6.0	6.0			6.0		6.0	6.0	6.0	6.0	6.0	
Flash Dont Walk (s)	14.0	14.0			14.0		14.0	14.0	14.0	14.0	14.0	
Pedestrian Calls (#/hr)	0	0			0		0	0	0	0	0	
v/c Ratio	0.00	0.83		0.37	0.61			0.39	0.74		0.25	
Control Delay	14.0	29.8		8.1	10.4			44.9	60.1		41.0	
Queue Delay	0.0	0.0		0.0	0.0			0.0	0.0		0.0	

Lane Group	EBL	EBT	EBR	WBL	WBT	WBR	NBL	NBT	NBR	SBL	SBT	SBR
Total Delay	14.0	29.8		8.1	10.4			44.9	60.1		41.0	
Queue Length 50th (ft)	0	453		21	230			51	123		34	
Queue Length 95th (ft)	3	553		40	297			81	161		59	
Internal Link Dist (ft)		970			2178			223			388	
Turn Bay Length (ft)	200			100					100			
Base Capacity (vph)	375	1039		509	1531			343	405		367	
Starvation Cap Reductn	0	0		0	0			0	0		0	
Spillback Cap Reductn	0	0		0	0			0	0		0	
Storage Cap Reductn	0	0		0	0			0	0		0	
Reduced v/c Ratio	0.00	0.83		0.25	0.53			0.24	0.46		0.16	

Intersection Summary

Area Type: Other
Cycle Length: 130.4
Actuated Cycle Length: 107.5
Natural Cycle: 80
Control Type: Actuated-Uncoordinated
Description: Runs Free. Ped PB. No Xwalks.

Splits and Phases: 300: HS Dwy/Fairwinds Boulevard & CTH N

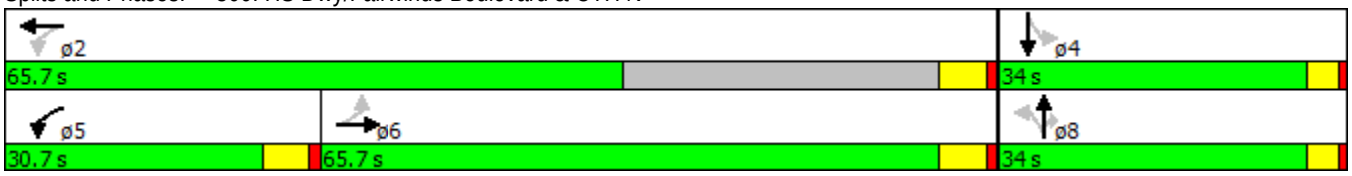

Movement	EBL	EBT	EBR	WBL	WBT	WBR	NBL	NBT	NBR	SBL	SBT	SBR
Lane Configurations												
Volume (veh/h)	1	590	30	90	575	10	60	1	270	40	1	1
Number	1	6	16	5	2	12	3	8	18	7	4	14
Initial Q (Qb), veh	0	0	0	0	0	0	0	0	0	0	0	0
Ped-Bike Adj(A_pbT)	1.00		1.00	1.00		1.00	1.00		1.00	1.00		1.00
Parking Bus, Adj	1.00	1.00	1.00	1.00	1.00	1.00	1.00	1.00	1.00	1.00	1.00	1.00
Adj Sat Flow, veh/h/ln	1863	1863	1900	1810	1810	1900	1900	1696	1696	1900	1863	1900
Adj Flow Rate, veh/h	1	819	42	125	799	14	83	1	188	56	1	1
Adj No. of Lanes	1	1	0	1	1	0	0	1	1	0	1	0
Peak Hour Factor	0.72	0.72	0.72	0.72	0.72	0.72	0.72	0.72	0.72	0.72	0.72	0.72
Percent Heavy Veh, %	2	2	2	5	5	5	12	12	12	2	2	2
Cap, veh/h	417	1048	54	345	1287	23	318	3	236	217	4	2
Arrive On Green	0.60	0.60	0.60	0.06	0.73	0.73	0.16	0.16	0.16	0.16	0.16	0.16
Sat Flow, veh/h	669	1757	90	1723	1773	31	1447	20	1442	836	24	15
Grp Volume(v), veh/h	1	0	861	125	0	813	84	0	188	58	0	0
Grp Sat Flow(s),veh/h/ln	669	0	1847	1723	0	1804	1467	0	1442	875	0	0
Q Serve(g_s), s	0.1	0.0	31.0	2.2	0.0	19.8	0.0	0.0	11.0	3.8	0.0	0.0
Cycle Q Clear(g_c), s	8.4	0.0	31.0	2.2	0.0	19.8	4.0	0.0	11.0	7.9	0.0	0.0
Prop In Lane	1.00		0.05	1.00		0.02	0.99		1.00	0.97		0.02
Lane Grp Cap(c), veh/h	417	0	1101	345	0	1310	321	0	236	224	0	0
V/C Ratio(X)	0.00	0.00	0.78	0.36	0.00	0.62	0.26	0.00	0.80	0.26	0.00	0.00
Avail Cap(c_a), veh/h	474	0	1259	723	0	1310	549	0	491	436	0	0
HCM Platoon Ratio	1.00	1.00	1.00	1.00	1.00	1.00	1.00	1.00	1.00	1.00	1.00	1.00
Upstream Filter(I)	1.00	0.00	1.00	1.00	0.00	1.00	1.00	0.00	1.00	1.00	0.00	0.00
Uniform Delay (d), s/veh	11.0	0.0	13.4	12.5	0.0	6.0	32.5	0.0	35.4	35.8	0.0	0.0
Incr Delay (d2), s/veh	0.0	0.0	4.2	1.1	0.0	1.5	0.4	0.0	6.0	0.6	0.0	0.0
Initial Q Delay(d3),s/veh	0.0	0.0	0.0	0.0	0.0	0.0	0.0	0.0	0.0	0.0	0.0	0.0
%ile BackOfQ(50%),veh/ln	0.0	0.0	16.8	1.5	0.0	10.3	1.8	0.0	4.8	1.3	0.0	0.0
LnGrp Delay(d),s/veh	11.0	0.0	17.6	13.6	0.0	7.6	32.9	0.0	41.4	36.4	0.0	0.0
LnGrp LOS	B		B	B		A	C		D	D		
Approach Vol, veh/h		862			938			272			58	
Approach Delay, s/veh		17.6			8.4			38.8			36.4	
Approach LOS		B			A			D			D	

Timer	1	2	3	4	5	6	7	8
Assigned Phs		2		4	5	6		8
Phs Duration (G+Y+Rc), s		69.6		18.4	11.4	58.2		18.4
Change Period (Y+Rc), s		* 5.7		4.0	* 5.7	* 5.7		4.0
Max Green Setting (Gmax), s		* 60		30.0	* 25	* 60		30.0
Max Q Clear Time (g_c+I1), s		21.8		9.9	4.2	33.0		13.0
Green Ext Time (p_c), s		31.1		1.5	0.6	19.5		1.4

Intersection Summary	
HCM 2010 Ctrl Delay	16.8
HCM 2010 LOS	B

Notes

* HCM 2010 computational engine requires equal clearance times for the phases crossing the barrier.

Lane Group	WBL	WBR	NBT	NBR	SBL	SBT
Lane Configurations						
Volume (vph)	40	10	685	15	5	735
Ideal Flow (vphpl)	1900	1900	1900	1900	1900	1900
Lane Width (ft)	12	12	12	12	12	12
Grade (%)	0%		0%			0%
Storage Length (ft)	0	0		225	390	
Storage Lanes	1	1		1	1	
Taper Length (ft)	100				100	
Link Speed (mph)	25		35			35
Link Distance (ft)	580		2325			691
Travel Time (s)	15.8		45.3			13.5
Confl. Peds. (#/hr)						
Confl. Bikes (#/hr)						
Peak Hour Factor	0.92	0.92	0.92	0.92	0.92	0.92
Growth Factor	100%	100%	100%	100%	100%	100%
Heavy Vehicles (%)	2%	2%	3%	3%	4%	4%
Bus Blockages (#/hr)	0	0	0	0	0	0
Parking (#/hr)						
Mid-Block Traffic (%)	0%		0%			0%
Shared Lane Traffic (%)						
Lane Group Flow (vph)	43	11	745	16	5	799
Sign Control	Stop		Free			Free

Intersection Summary	
Area Type:	Other
Control Type: Unsignalized	

Intersection	
Int Delay, s/veh	0.6

Movement	WBL	WBR	NBT	NBR	SBL	SBT
Vol, veh/h	40	10	685	15	5	735
Conflicting Peds, #/hr	0	0	0	0	0	0
Sign Control	Stop	Stop	Free	Free	Free	Free
RT Channelized	-	None	-	None	-	None
Storage Length	0	0	-	225	390	-
Veh in Median Storage, #	2	-	0	-	-	0
Grade, %	0	-	0	-	-	0
Peak Hour Factor	92	92	92	92	92	92
Heavy Vehicles, %	2	2	3	3	4	4
Mvmt Flow	43	11	745	16	5	799

Major/Minor	Minor1		Major1		Major2	
Conflicting Flow All	1155	372	0	0	745	0
Stage 1	745	-	-	-	-	-
Stage 2	410	-	-	-	-	-
Critical Hdwy	6.84	6.94	-	-	4.18	-
Critical Hdwy Stg 1	5.84	-	-	-	-	-
Critical Hdwy Stg 2	5.84	-	-	-	-	-
Follow-up Hdwy	3.52	3.32	-	-	2.24	-
Pot Cap-1 Maneuver	190	625	-	-	846	-
Stage 1	430	-	-	-	-	-
Stage 2	638	-	-	-	-	-
Platoon blocked, %			-	-		-
Mov Cap-1 Maneuver	189	625	-	-	846	-
Mov Cap-2 Maneuver	372	-	-	-	-	-
Stage 1	430	-	-	-	-	-
Stage 2	634	-	-	-	-	-

Approach	WB	NB	SB
HCM Control Delay, s	15	0	0.1
HCM LOS	C		

Minor Lane/Major Mvmt	NBT	NBR	WBLn1	WBLn2	SBL	SBT
Capacity (veh/h)	-	-	372	625	846	-
HCM Lane V/C Ratio	-	-	0.117	0.017	0.006	-
HCM Control Delay (s)	-	-	16	10.9	9.3	-
HCM Lane LOS	-	-	C	B	A	-
HCM 95th %tile Q(veh)	-	-	0.4	0.1	0	-

Lane Group	EBL	EBT	EBR	WBL	WBT	WBR	NBL	NBT	NBR	SBL	SBT	SBR
Lane Configurations												
Volume (vph)	105	230	295	95	355	165	360	430	80	145	450	180
Ideal Flow (vphpl)	1900	1900	1900	1900	1900	1900	1900	1900	1900	1900	1900	1900
Lane Width (ft)	12	12	12	12	12	12	12	12	12	12	12	12
Grade (%)		0%			0%			0%			0%	
Storage Length (ft)	210		430	215		0	260		55	240		90
Storage Lanes	1		1	1		0	2		1	1		1
Taper Length (ft)	100			100			100			100		
Right Turn on Red			No			No			No			No
Link Speed (mph)		40			40			35			35	
Link Distance (ft)		2258			1339			1052			2325	
Travel Time (s)		38.5			22.8			20.5			45.3	
Confl. Peds. (#/hr)												
Confl. Bikes (#/hr)												
Peak Hour Factor	0.93	0.93	0.93	0.93	0.93	0.93	0.93	0.93	0.93	0.93	0.93	0.93
Growth Factor	100%	100%	50%	100%	100%	100%	100%	100%	50%	100%	100%	50%
Heavy Vehicles (%)	3%	3%	3%	1%	1%	1%	2%	2%	2%	3%	3%	3%
Bus Blockages (#/hr)	0	0	0	0	0	0	0	0	0	0	0	0
Parking (#/hr)												
Mid-Block Traffic (%)		0%			0%			0%			0%	
Shared Lane Traffic (%)												
Lane Group Flow (vph)	113	247	159	102	559	0	387	462	43	156	484	97
Turn Type	pm+pt	NA	Perm	pm+pt	NA		Prot	NA	Perm	Prot	NA	Perm
Protected Phases	7	4		3	8		1	6		5	2	
Permitted Phases	4		4	8					6			2
Detector Phase	7	4	4	3	8		1	6	6	5	2	2
Switch Phase												
Minimum Initial (s)	6.0	8.0	8.0	6.0	8.0		8.0	15.0	15.0	6.0	15.0	15.0
Minimum Split (s)	10.5	48.6	48.6	10.5	50.6		12.5	45.4	45.4	10.5	50.4	50.4
Total Split (s)	24.5	36.6	36.6	24.5	36.6		24.5	46.4	46.4	24.5	46.4	46.4
Total Split (%)	18.6%	27.7%	27.7%	18.6%	27.7%		18.6%	35.2%	35.2%	18.6%	35.2%	35.2%
Maximum Green (s)	20.0	30.0	30.0	20.0	30.0		20.0	40.0	40.0	20.0	40.0	40.0
Yellow Time (s)	3.5	4.0	4.0	3.5	4.0		3.5	3.9	3.9	3.5	3.9	3.9
All-Red Time (s)	1.0	2.6	2.6	1.0	2.6		1.0	2.5	2.5	1.0	2.5	2.5
Lost Time Adjust (s)	0.0	0.0	0.0	0.0	0.0		0.0	0.0	0.0	0.0	0.0	0.0
Total Lost Time (s)	4.5	6.6	6.6	4.5	6.6		4.5	6.4	6.4	4.5	6.4	6.4
Lead/Lag	Lead	Lag	Lag	Lead	Lag		Lead	Lag	Lag	Lead	Lag	Lag
Lead-Lag Optimize?												
Vehicle Extension (s)	1.5	1.5	1.5	1.5	1.5		1.5	4.3	4.3	1.5	3.4	3.4
Minimum Gap (s)	1.5	1.5	1.5	1.5	1.5		1.5	2.0	2.0	1.5	2.0	2.0
Time Before Reduce (s)	20.0	30.0	30.0	20.0	30.0		20.0	19.0	19.0	20.0	20.0	20.0
Time To Reduce (s)	0.0	0.0	0.0	0.0	0.0		0.0	21.0	21.0	0.0	20.0	20.0
Recall Mode	None	None	None	None	None		None	Min	Min	None	Min	Min
Walk Time (s)		7.0	7.0		7.0			7.0	7.0		7.0	7.0
Flash Dont Walk (s)		35.0	35.0		37.0			32.0	32.0		37.0	37.0
Pedestrian Calls (#/hr)		0	0		0			0	0		0	0
v/c Ratio	0.36	0.50	0.38	0.24	0.75		0.67	0.50	0.10	0.62	0.59	0.26
Control Delay	20.4	32.8	31.4	18.6	38.2		40.2	30.1	27.8	46.8	33.0	31.1
Queue Delay	0.0	0.0	0.0	0.0	0.0		0.0	0.0	0.0	0.0	0.0	0.0

Lane Group	EBL	EBT	EBR	WBL	WBT	WBR	NBL	NBT	NBR	SBL	SBT	SBR
Total Delay	20.4	32.8	31.4	18.6	38.2		40.2	30.1	27.8	46.8	33.0	31.1
Queue Length 50th (ft)	36	111	69	32	140		95	106	17	76	116	41
Queue Length 95th (ft)	84	223	150	76	241		174	193	51	163	207	100
Internal Link Dist (ft)		2178			1259			972			2245	
Turn Bay Length (ft)	210		430	215			260		55	240		90
Base Capacity (vph)	511	684	581	618	1264		849	1750	782	433	1734	775
Starvation Cap Reductn	0	0	0	0	0		0	0	0	0	0	0
Spillback Cap Reductn	0	0	0	0	0		0	0	0	0	0	0
Storage Cap Reductn	0	0	0	0	0		0	0	0	0	0	0
Reduced v/c Ratio	0.22	0.36	0.27	0.17	0.44		0.46	0.26	0.05	0.36	0.28	0.13

Intersection Summary

Area Type: Other
Cycle Length: 132
Actuated Cycle Length: 83.5
Natural Cycle: 125
Control Type: Actuated-Uncoordinated
Description: Runs Free. PB all app. Ped interval reduced to max green for HCM output.

Splits and Phases: 200: STH 83/Rochester Street & CTH N

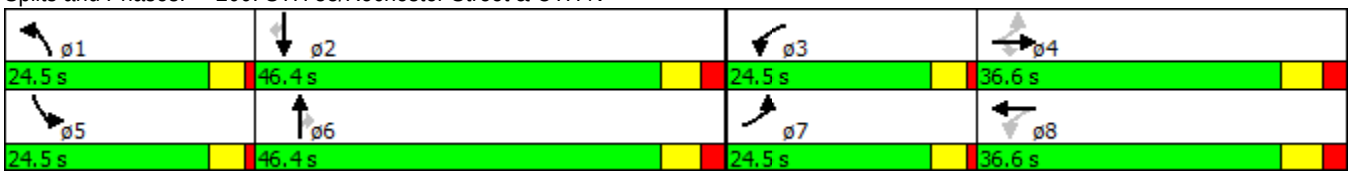

Movement	EBL	EBT	EBR	WBL	WBT	WBR	NBL	NBT	NBR	SBL	SBT	SBR
Lane Configurations												
Volume (veh/h)	105	230	295	95	355	165	360	430	80	145	450	180
Number	7	4	14	3	8	18	1	6	16	5	2	12
Initial Q (Qb), veh	0	0	0	0	0	0	0	0	0	0	0	0
Ped-Bike Adj(A_pbT)	1.00		1.00	1.00		1.00	1.00		1.00	1.00		1.00
Parking Bus, Adj	1.00	1.00	1.00	1.00	1.00	1.00	1.00	1.00	1.00	1.00	1.00	1.00
Adj Sat Flow, veh/h/ln	1845	1845	1845	1881	1881	1900	1863	1863	1863	1845	1845	1845
Adj Flow Rate, veh/h	113	247	159	102	382	177	387	462	43	156	484	97
Adj No. of Lanes	1	1	1	1	2	0	2	2	1	1	2	1
Peak Hour Factor	0.93	0.93	0.93	0.93	0.93	0.93	0.93	0.93	0.93	0.93	0.93	0.93
Percent Heavy Veh, %	3	3	3	1	1	1	2	2	2	3	3	3
Cap, veh/h	273	391	332	313	501	229	485	1099	492	194	981	439
Arrive On Green	0.07	0.21	0.21	0.07	0.21	0.21	0.14	0.31	0.31	0.11	0.28	0.28
Sat Flow, veh/h	1757	1845	1568	1792	2386	1090	3442	3539	1583	1757	3505	1568
Grp Volume(v), veh/h	113	247	159	102	285	274	387	462	43	156	484	97
Grp Sat Flow(s),veh/h/ln	1757	1845	1568	1792	1787	1689	1721	1770	1583	1757	1752	1568
Q Serve(g_s), s	3.7	9.0	6.6	3.2	11.1	11.4	8.1	7.7	1.4	6.4	8.6	3.5
Cycle Q Clear(g_c), s	3.7	9.0	6.6	3.2	11.1	11.4	8.1	7.7	1.4	6.4	8.6	3.5
Prop In Lane	1.00		1.00	1.00		0.65	1.00		1.00	1.00		1.00
Lane Grp Cap(c), veh/h	273	391	332	313	375	354	485	1099	492	194	981	439
V/C Ratio(X)	0.41	0.63	0.48	0.33	0.76	0.77	0.80	0.42	0.09	0.81	0.49	0.22
Avail Cap(c_a), veh/h	618	746	634	668	722	683	927	1907	853	473	1889	845
HCM Platoon Ratio	1.00	1.00	1.00	1.00	1.00	1.00	1.00	1.00	1.00	1.00	1.00	1.00
Upstream Filter(I)	1.00	1.00	1.00	1.00	1.00	1.00	1.00	1.00	1.00	1.00	1.00	1.00
Uniform Delay (d), s/veh	21.4	26.6	25.7	21.0	27.6	27.7	30.9	20.3	18.1	32.2	22.3	20.5
Incr Delay (d2), s/veh	0.4	0.6	0.4	0.2	1.2	1.4	1.2	0.4	0.1	3.0	0.4	0.3
Initial Q Delay(d3),s/veh	0.0	0.0	0.0	0.0	0.0	0.0	0.0	0.0	0.0	0.0	0.0	0.0
%ile BackOfQ(50%),veh/ln	1.8	4.7	2.9	1.6	5.6	5.4	3.9	3.8	0.6	3.3	4.2	1.6
LnGrp Delay(d),s/veh	21.8	27.3	26.1	21.2	28.8	29.0	32.0	20.7	18.3	35.2	22.8	20.8
LnGrp LOS	C	C	C	C	C	C	C	C	B	D	C	C
Approach Vol, veh/h		519			661			892			737	
Approach Delay, s/veh		25.7			27.7			25.5			25.1	
Approach LOS		C			C			C			C	

Timer	1	2	3	4	5	6	7	8
Assigned Phs	1	2	3	4	5	6	7	8
Phs Duration (G+Y+Rc), s	15.0	27.2	9.8	22.3	12.7	29.5	9.9	22.2
Change Period (Y+Rc), s	4.5	6.4	4.5	6.6	4.5	6.4	4.5	6.6
Max Green Setting (Gmax), s	20.0	40.0	20.0	30.0	20.0	40.0	20.0	30.0
Max Q Clear Time (g_c+I1), s	10.1	10.6	5.2	11.0	8.4	9.7	5.7	13.4
Green Ext Time (p_c), s	0.4	10.2	0.1	2.3	0.1	10.3	0.1	2.2

Intersection Summary	
HCM 2010 Ctrl Delay	26.0
HCM 2010 LOS	C

Notes

User approved pedestrian interval to be less than phase max green.

Lane Group	EBL	EBT	EBR	WBL	WBT	WBR	NBL	NBT	NBR	SBL	SBT	SBR
Lane Configurations												
Volume (vph)	5	525	5	15	845	35	35	1	85	20	1	1
Ideal Flow (vphpl)	1900	1900	1900	1900	1900	1900	1900	1900	1900	1900	1900	1900
Lane Width (ft)	12	12	12	12	12	12	12	12	12	12	12	12
Grade (%)		0%			0%			0%			0%	
Storage Length (ft)	200		0	100		0	0		100	0		0
Storage Lanes	1		0	1		0	0		1	0		0
Taper Length (ft)	100			100			100			100		
Right Turn on Red			No			No			No			No
Link Speed (mph)		40			40			25			25	
Link Distance (ft)		1050			2258			303			468	
Travel Time (s)		17.9			38.5			8.3			12.8	
Confl. Peds. (#/hr)												
Confl. Bikes (#/hr)												
Peak Hour Factor	0.91	0.91	0.91	0.91	0.91	0.91	0.91	0.91	0.91	0.91	0.91	0.91
Growth Factor	100%	100%	100%	100%	100%	100%	100%	100%	50%	100%	100%	100%
Heavy Vehicles (%)	3%	3%	3%	1%	1%	1%	1%	1%	1%	5%	5%	5%
Bus Blockages (#/hr)	0	0	0	0	0	0	0	0	0	0	0	0
Parking (#/hr)												
Mid-Block Traffic (%)		0%			0%			0%			0%	
Shared Lane Traffic (%)												
Lane Group Flow (vph)	5	582	0	16	967	0	0	39	47	0	24	0
Turn Type	Perm	NA		pm+pt	NA		Perm	NA	Perm	Perm	NA	
Protected Phases		6		5	2			8			4	
Permitted Phases	6			2			8		8	4		
Detector Phase	6	6		5	2		8	8	8	4	4	
Switch Phase												
Minimum Initial (s)	15.0	15.0		6.0	7.0		6.0	6.0	6.0	6.0	6.0	
Minimum Split (s)	25.7	25.7		11.7	25.7		24.0	24.0	24.0	24.0	24.0	
Total Split (s)	65.7	65.7		30.7	65.7		34.0	34.0	34.0	34.0	34.0	
Total Split (%)	50.4%	50.4%		23.5%	50.4%		26.1%	26.1%	26.1%	26.1%	26.1%	
Maximum Green (s)	60.0	60.0		25.0	60.0		30.0	30.0	30.0	30.0	30.0	
Yellow Time (s)	4.5	4.5		4.5	4.5		3.0	3.0	3.0	3.0	3.0	
All-Red Time (s)	1.2	1.2		1.2	1.2		1.0	1.0	1.0	1.0	1.0	
Lost Time Adjust (s)	0.0	0.0		0.0	0.0			0.0	0.0		0.0	
Total Lost Time (s)	5.7	5.7		5.7	5.7			4.0	4.0		4.0	
Lead/Lag	Lag	Lag		Lead								
Lead-Lag Optimize?												
Vehicle Extension (s)	5.5	5.5		4.5	5.5		3.0	3.0	3.0	3.0	3.0	
Minimum Gap (s)	2.0	2.0		0.2	2.0		1.5	1.5	1.5	1.5	1.5	
Time Before Reduce (s)	0.0	0.0		0.0	0.0		0.0	0.0	0.0	0.0	0.0	
Time To Reduce (s)	0.0	0.0		0.0	0.0		0.0	0.0	0.0	0.0	0.0	
Recall Mode	Min	Min		None	Min		None	None	None	None	None	
Walk Time (s)	6.0	6.0			6.0		6.0	6.0	6.0	6.0	6.0	
Flash Dont Walk (s)	14.0	14.0			14.0		14.0	14.0	14.0	14.0	14.0	
Pedestrian Calls (#/hr)	0	0			0		0	0	0	0	0	
v/c Ratio	0.01	0.42		0.03	0.66			0.22	0.22		0.14	
Control Delay	5.4	6.7		2.7	7.6			30.9	30.3		29.6	
Queue Delay	0.0	0.0		0.0	0.0			0.0	0.0		0.0	

Lane Group	EBL	EBT	EBR	WBL	WBT	WBR	NBL	NBT	NBR	SBL	SBT	SBR
Total Delay	5.4	6.7		2.7	7.6			30.9	30.3		29.6	
Queue Length 50th (ft)	0	67		1	158			12	14		7	
Queue Length 95th (ft)	6	253		6	319			46	52		33	
Internal Link Dist (ft)		970			2178			223			388	
Turn Bay Length (ft)	200			100					100			
Base Capacity (vph)	456	1693		977	1870			693	825		663	
Starvation Cap Reductn	0	0		0	0			0	0		0	
Spillback Cap Reductn	0	0		0	0			0	0		0	
Storage Cap Reductn	0	0		0	0			0	0		0	
Reduced v/c Ratio	0.01	0.34		0.02	0.52			0.06	0.06		0.04	

Intersection Summary

Area Type: Other
Cycle Length: 130.4
Actuated Cycle Length: 61.3
Natural Cycle: 70
Control Type: Actuated-Uncoordinated
Description: Runs Free. Ped PB. No Xwalks.

Splits and Phases: 300: HS Dwy/Fairwinds Boulevard & CTH N

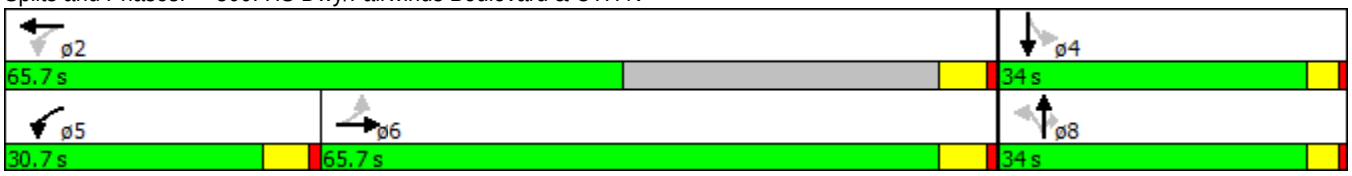

Movement	EBL	EBT	EBR	WBL	WBT	WBR	NBL	NBT	NBR	SBL	SBT	SBR
Lane Configurations												
Volume (veh/h)	5	525	5	15	845	35	35	1	85	20	1	1
Number	1	6	16	5	2	12	3	8	18	7	4	14
Initial Q (Qb), veh	0	0	0	0	0	0	0	0	0	0	0	0
Ped-Bike Adj(A_pbT)	1.00		1.00	1.00		1.00	1.00		1.00	1.00		1.00
Parking Bus, Adj	1.00	1.00	1.00	1.00	1.00	1.00	1.00	1.00	1.00	1.00	1.00	1.00
Adj Sat Flow, veh/h/ln	1845	1845	1900	1881	1881	1900	1900	1881	1881	1900	1810	1900
Adj Flow Rate, veh/h	5	577	5	16	929	38	38	1	47	22	1	1
Adj No. of Lanes	1	1	0	1	1	0	0	1	1	0	1	0
Peak Hour Factor	0.91	0.91	0.91	0.91	0.91	0.91	0.91	0.91	0.91	0.91	0.91	0.91
Percent Heavy Veh, %	3	3	3	1	1	1	1	1	1	5	5	5
Cap, veh/h	421	1243	11	591	1409	58	218	4	121	167	8	3
Arrive On Green	0.68	0.68	0.68	0.02	0.79	0.79	0.08	0.08	0.08	0.08	0.08	0.08
Sat Flow, veh/h	573	1826	16	1792	1795	73	1537	59	1599	894	100	43
Grp Volume(v), veh/h	5	0	582	16	0	967	39	0	47	24	0	0
Grp Sat Flow(s),veh/h/ln	573	0	1842	1792	0	1868	1596	0	1599	1037	0	0
Q Serve(g_s), s	0.3	0.0	10.3	0.2	0.0	16.1	0.0	0.0	2.0	1.0	0.0	0.0
Cycle Q Clear(g_c), s	9.1	0.0	10.3	0.2	0.0	16.1	1.4	0.0	2.0	2.4	0.0	0.0
Prop In Lane	1.00		0.01	1.00		0.04	0.97		1.00	0.92		0.04
Lane Grp Cap(c), veh/h	421	0	1254	591	0	1467	223	0	121	177	0	0
V/C Ratio(X)	0.01	0.00	0.46	0.03	0.00	0.66	0.18	0.00	0.39	0.14	0.00	0.00
Avail Cap(c_a), veh/h	524	0	1583	1191	0	1606	730	0	687	651	0	0
HCM Platoon Ratio	1.00	1.00	1.00	1.00	1.00	1.00	1.00	1.00	1.00	1.00	1.00	1.00
Upstream Filter(I)	1.00	0.00	1.00	1.00	0.00	1.00	1.00	0.00	1.00	1.00	0.00	0.00
Uniform Delay (d), s/veh	7.0	0.0	5.2	3.6	0.0	3.3	30.5	0.0	30.7	31.3	0.0	0.0
Incr Delay (d2), s/veh	0.0	0.0	0.7	0.0	0.0	1.6	0.4	0.0	2.0	0.3	0.0	0.0
Initial Q Delay(d3),s/veh	0.0	0.0	0.0	0.0	0.0	0.0	0.0	0.0	0.0	0.0	0.0	0.0
%ile BackOfQ(50%),veh/ln	0.0	0.0	5.4	0.1	0.0	8.7	0.7	0.0	0.9	0.5	0.0	0.0
LnGrp Delay(d),s/veh	7.0	0.0	5.9	3.7	0.0	4.9	30.8	0.0	32.7	31.6	0.0	0.0
LnGrp LOS	A		A	A		A	C		C	C		
Approach Vol, veh/h		587			983			86			24	
Approach Delay, s/veh		6.0			4.9			31.9			31.6	
Approach LOS		A			A			C			C	

Timer	1	2	3	4	5	6	7	8
Assigned Phs		2		4	5	6		8
Phs Duration (G+Y+Rc), s		60.5		9.3	7.3	53.2		9.3
Change Period (Y+Rc), s		* 5.7		4.0	* 5.7	* 5.7		4.0
Max Green Setting (Gmax), s		* 60		30.0	* 25	* 60		30.0
Max Q Clear Time (g_c+I1), s		18.1		4.4	2.2	12.3		4.0
Green Ext Time (p_c), s		31.9		0.5	0.0	35.2		0.5

Intersection Summary	
HCM 2010 Ctrl Delay	7.0
HCM 2010 LOS	A

Notes

* HCM 2010 computational engine requires equal clearance times for the phases crossing the barrier.

APPENDIX B

EXISTING TRANSPORTATION SYSTEM WITH BACKGROUND TRAFFIC OPERATIONAL ANALYSIS

B2. Horizon Year 2026 Background Traffic

Lane Group	WBL	WBR	NBT	NBR	SBL	SBT
Lane Configurations						
Volume (vph)	5	5	685	10	5	585
Ideal Flow (vphpl)	1900	1900	1900	1900	1900	1900
Lane Width (ft)	12	12	12	12	12	12
Grade (%)	0%		0%			0%
Storage Length (ft)	0	0		225	390	
Storage Lanes	1	1		1	1	
Taper Length (ft)	100				100	
Link Speed (mph)	25		35			35
Link Distance (ft)	580		2325			691
Travel Time (s)	15.8		45.3			13.5
Confl. Peds. (#/hr)						
Confl. Bikes (#/hr)						
Peak Hour Factor	0.88	0.88	0.88	0.88	0.88	0.88
Growth Factor	100%	100%	100%	100%	100%	100%
Heavy Vehicles (%)	25%	25%	5%	5%	7%	7%
Bus Blockages (#/hr)	0	0	0	0	0	0
Parking (#/hr)						
Mid-Block Traffic (%)	0%		0%			0%
Shared Lane Traffic (%)						
Lane Group Flow (vph)	6	6	778	11	6	665
Sign Control	Stop		Free			Free

Intersection Summary	
Area Type:	Other
Control Type: Unsignalized	

Intersection	
Int Delay, s/veh	0.2

Movement	WBL	WBR	NBT	NBR	SBL	SBT
Vol, veh/h	5	5	685	10	5	585
Conflicting Peds, #/hr	0	0	0	0	0	0
Sign Control	Stop	Stop	Free	Free	Free	Free
RT Channelized	-	None	-	None	-	None
Storage Length	0	0	-	225	390	-
Veh in Median Storage, #	2	-	0	-	-	0
Grade, %	0	-	0	-	-	0
Peak Hour Factor	88	88	88	88	88	88
Heavy Vehicles, %	25	25	5	5	7	7
Mvmt Flow	6	6	778	11	6	665

Major/Minor	Minor1		Major1		Major2	
Conflicting Flow All	1122	389	0	0	778	0
Stage 1	778	-	-	-	-	-
Stage 2	344	-	-	-	-	-
Critical Hdwy	7.3	7.4	-	-	4.24	-
Critical Hdwy Stg 1	6.3	-	-	-	-	-
Critical Hdwy Stg 2	6.3	-	-	-	-	-
Follow-up Hdwy	3.75	3.55	-	-	2.27	-
Pot Cap-1 Maneuver	167	549	-	-	803	-
Stage 1	359	-	-	-	-	-
Stage 2	626	-	-	-	-	-
Platoon blocked, %			-	-		-
Mov Cap-1 Maneuver	166	549	-	-	803	-
Mov Cap-2 Maneuver	320	-	-	-	-	-
Stage 1	359	-	-	-	-	-
Stage 2	621	-	-	-	-	-

Approach	WB	NB	SB
HCM Control Delay, s	14.1	0	0.1
HCM LOS	B		

Minor Lane/Major Mvmt	NBT	NBR	WBLn1	WBLn2	SBL	SBT
Capacity (veh/h)	-	-	320	549	803	-
HCM Lane V/C Ratio	-	-	0.018	0.01	0.007	-
HCM Control Delay (s)	-	-	16.5	11.6	9.5	-
HCM Lane LOS	-	-	C	B	A	-
HCM 95th %tile Q(veh)	-	-	0.1	0	0	-

Lane Group	EBL	EBT	EBR	WBL	WBT	WBR	NBL	NBT	NBR	SBL	SBT	SBR
Lane Configurations												
Volume (vph)	185	415	375	35	380	130	300	380	75	160	375	55
Ideal Flow (vphpl)	1900	1900	1900	1900	1900	1900	1900	1900	1900	1900	1900	1900
Lane Width (ft)	12	12	12	12	12	12	12	12	12	12	12	12
Grade (%)		0%			0%			0%			0%	
Storage Length (ft)	210		430	215		0	260		55	240		90
Storage Lanes	1		1	1		0	2		1	1		1
Taper Length (ft)	100			100			100			100		
Right Turn on Red			No			No			No			No
Link Speed (mph)		40			40			35			35	
Link Distance (ft)		2258			1339			1052			2325	
Travel Time (s)		38.5			22.8			20.5			45.3	
Confl. Peds. (#/hr)												
Confl. Bikes (#/hr)												
Peak Hour Factor	0.81	0.81	0.81	0.81	0.81	0.81	0.81	0.81	0.81	0.81	0.81	0.81
Growth Factor	100%	100%	50%	100%	100%	100%	100%	100%	50%	100%	100%	50%
Heavy Vehicles (%)	5%	5%	5%	5%	5%	5%	10%	10%	10%	7%	7%	7%
Bus Blockages (#/hr)	0	0	0	0	0	0	0	0	0	0	0	0
Parking (#/hr)												
Mid-Block Traffic (%)		0%			0%			0%			0%	
Shared Lane Traffic (%)												
Lane Group Flow (vph)	228	512	231	43	629	0	370	469	46	198	463	34
Turn Type	pm+pt	NA	Perm	pm+pt	NA		Prot	NA	Perm	Prot	NA	Perm
Protected Phases	7	4		3	8		1	6		5	2	
Permitted Phases	4		4	8					6			2
Detector Phase	7	4	4	3	8		1	6	6	5	2	2
Switch Phase												
Minimum Initial (s)	6.0	8.0	8.0	6.0	8.0		8.0	15.0	15.0	6.0	15.0	15.0
Minimum Split (s)	10.5	48.6	48.6	10.5	50.6		12.5	45.4	45.4	10.5	50.4	50.4
Total Split (s)	24.5	36.6	36.6	24.5	36.6		24.5	46.4	46.4	24.5	46.4	46.4
Total Split (%)	18.6%	27.7%	27.7%	18.6%	27.7%		18.6%	35.2%	35.2%	18.6%	35.2%	35.2%
Maximum Green (s)	20.0	30.0	30.0	20.0	30.0		20.0	40.0	40.0	20.0	40.0	40.0
Yellow Time (s)	3.5	4.0	4.0	3.5	4.0		3.5	3.9	3.9	3.5	3.9	3.9
All-Red Time (s)	1.0	2.6	2.6	1.0	2.6		1.0	2.5	2.5	1.0	2.5	2.5
Lost Time Adjust (s)	0.0	0.0	0.0	0.0	0.0		0.0	0.0	0.0	0.0	0.0	0.0
Total Lost Time (s)	4.5	6.6	6.6	4.5	6.6		4.5	6.4	6.4	4.5	6.4	6.4
Lead/Lag	Lead	Lag	Lag	Lead	Lag		Lead	Lag	Lag	Lead	Lag	Lag
Lead-Lag Optimize?												
Vehicle Extension (s)	1.5	1.5	1.5	1.5	1.5		1.5	4.3	4.3	1.5	3.4	3.4
Minimum Gap (s)	1.5	1.5	1.5	1.5	1.5		1.5	2.0	2.0	1.5	2.0	2.0
Time Before Reduce (s)	20.0	30.0	30.0	20.0	30.0		20.0	19.0	19.0	20.0	20.0	20.0
Time To Reduce (s)	0.0	0.0	0.0	0.0	0.0		0.0	21.0	21.0	0.0	20.0	20.0
Recall Mode	None	None	None	None	None		None	Min	Min	None	Min	Min
Walk Time (s)		7.0	7.0		7.0			7.0	7.0		7.0	7.0
Flash Dont Walk (s)		35.0	35.0		37.0			32.0	32.0		37.0	37.0
Pedestrian Calls (#/hr)		0	0		0			0	0		0	0
v/c Ratio	0.62	0.76	0.41	0.16	0.79		0.74	0.64	0.14	0.74	0.61	0.10
Control Delay	26.0	38.6	28.4	19.2	44.4		50.8	40.4	35.2	58.6	39.2	34.4
Queue Delay	0.0	0.0	0.0	0.0	0.0		0.0	0.0	0.0	0.0	0.0	0.0

Lane Group	EBL	EBT	EBR	WBL	WBT	WBR	NBL	NBT	NBR	SBL	SBT	SBR
Total Delay	26.0	38.6	28.4	19.2	44.4		50.8	40.4	35.2	58.6	39.2	34.4
Queue Length 50th (ft)	89	304	116	15	197		115	141	23	119	137	17
Queue Length 95th (ft)	145	431	186	36	273		174	201	55	206	197	44
Internal Link Dist (ft)		2178			1259			972			2245	
Turn Bay Length (ft)	210		430	215			260		55	240		90
Base Capacity (vph)	457	671	570	499	1048		672	1386	620	356	1425	637
Starvation Cap Reductn	0	0	0	0	0		0	0	0	0	0	0
Spillback Cap Reductn	0	0	0	0	0		0	0	0	0	0	0
Storage Cap Reductn	0	0	0	0	0		0	0	0	0	0	0
Reduced v/c Ratio	0.50	0.76	0.41	0.09	0.60		0.55	0.34	0.07	0.56	0.32	0.05

Intersection Summary

Area Type: Other
Cycle Length: 132
Actuated Cycle Length: 98
Natural Cycle: 125
Control Type: Actuated-Uncoordinated
Description: Runs Free. PB all app. Ped interval reduced to max green for HCM output.

Splits and Phases: 200: STH 83/Rochester Street & CTH N

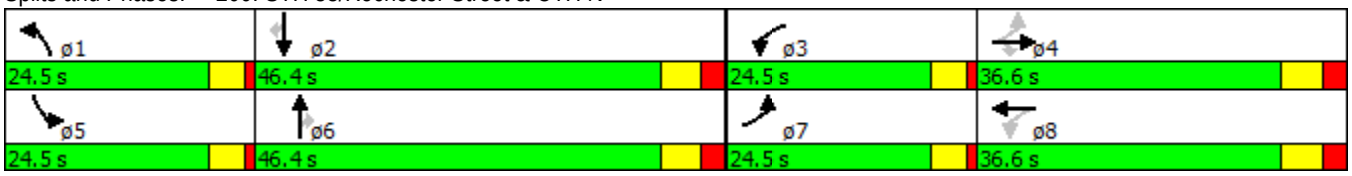

Movement	EBL	EBT	EBR	WBL	WBT	WBR	NBL	NBT	NBR	SBL	SBT	SBR
Lane Configurations												
Volume (veh/h)	185	415	375	35	380	130	300	380	75	160	375	55
Number	7	4	14	3	8	18	1	6	16	5	2	12
Initial Q (Qb), veh	0	0	0	0	0	0	0	0	0	0	0	0
Ped-Bike Adj(A_pbT)	1.00		1.00	1.00		1.00	1.00		1.00	1.00		1.00
Parking Bus, Adj	1.00	1.00	1.00	1.00	1.00	1.00	1.00	1.00	1.00	1.00	1.00	1.00
Adj Sat Flow, veh/h/ln	1810	1810	1810	1810	1810	1900	1727	1727	1727	1776	1776	1776
Adj Flow Rate, veh/h	228	512	231	43	469	160	370	469	46	198	463	34
Adj No. of Lanes	1	1	1	1	2	0	2	2	1	1	2	1
Peak Hour Factor	0.81	0.81	0.81	0.81	0.81	0.81	0.81	0.81	0.81	0.81	0.81	0.81
Percent Heavy Veh, %	5	5	5	5	5	5	10	10	10	7	7	7
Cap, veh/h	335	566	481	187	603	204	445	838	375	232	854	382
Arrive On Green	0.12	0.31	0.31	0.04	0.24	0.24	0.14	0.26	0.26	0.14	0.25	0.25
Sat Flow, veh/h	1723	1810	1538	1723	2523	855	3191	3282	1468	1691	3374	1509
Grp Volume(v), veh/h	228	512	231	43	318	311	370	469	46	198	463	34
Grp Sat Flow(s),veh/h/ln	1723	1810	1538	1723	1719	1659	1596	1641	1468	1691	1687	1509
Q Serve(g_s), s	8.3	23.9	10.7	1.6	15.2	15.4	9.9	10.9	2.1	10.1	10.5	1.5
Cycle Q Clear(g_c), s	8.3	23.9	10.7	1.6	15.2	15.4	9.9	10.9	2.1	10.1	10.5	1.5
Prop In Lane	1.00		1.00	1.00		0.52	1.00		1.00	1.00		1.00
Lane Grp Cap(c), veh/h	335	566	481	187	411	397	445	838	375	232	854	382
V/C Ratio(X)	0.68	0.90	0.48	0.23	0.77	0.78	0.83	0.56	0.12	0.85	0.54	0.09
Avail Cap(c_a), veh/h	523	617	524	503	586	566	725	1492	667	384	1534	686
HCM Platoon Ratio	1.00	1.00	1.00	1.00	1.00	1.00	1.00	1.00	1.00	1.00	1.00	1.00
Upstream Filter(I)	1.00	1.00	1.00	1.00	1.00	1.00	1.00	1.00	1.00	1.00	1.00	1.00
Uniform Delay (d), s/veh	21.9	29.0	24.4	25.0	31.3	31.3	36.9	28.5	25.2	37.1	28.4	25.1
Incr Delay (d2), s/veh	0.9	15.2	0.3	0.2	2.4	2.7	1.9	0.9	0.2	4.5	0.6	0.1
Initial Q Delay(d3),s/veh	0.0	0.0	0.0	0.0	0.0	0.0	0.0	0.0	0.0	0.0	0.0	0.0
%ile BackOfQ(50%),veh/ln	3.9	14.2	4.6	0.8	7.5	7.4	4.5	5.1	0.9	5.0	5.0	0.6
LnGrp Delay(d),s/veh	22.8	44.1	24.7	25.2	33.6	34.1	38.8	29.4	25.4	41.6	29.1	25.2
LnGrp LOS	C	D	C	C	C	C	D	C	C	D	C	C
Approach Vol, veh/h		971			672			885			695	
Approach Delay, s/veh		34.5			33.3			33.1			32.5	
Approach LOS		C			C			C			C	

Timer	1	2	3	4	5	6	7	8
Assigned Phs	1	2	3	4	5	6	7	8
Phs Duration (G+Y+Rc), s	16.8	28.7	8.4	34.1	16.6	28.9	14.9	27.6
Change Period (Y+Rc), s	4.5	6.4	4.5	6.6	4.5	6.4	4.5	6.6
Max Green Setting (Gmax), s	20.0	40.0	20.0	30.0	20.0	40.0	20.0	30.0
Max Q Clear Time (g_c+I1), s	11.9	12.5	3.6	25.9	12.1	12.9	10.3	17.4
Green Ext Time (p_c), s	0.3	9.6	0.0	1.7	0.1	9.5	0.1	3.1

Intersection Summary	
HCM 2010 Ctrl Delay	33.4
HCM 2010 LOS	C

Notes

User approved pedestrian interval to be less than phase max green.

Lane Group	EBL	EBT	EBR	WBL	WBT	WBR	NBL	NBT	NBR	SBL	SBT	SBR
Lane Configurations												
Volume (vph)	1	660	35	90	635	10	65	1	275	40	1	1
Ideal Flow (vphpl)	1900	1900	1900	1900	1900	1900	1900	1900	1900	1900	1900	1900
Lane Width (ft)	12	12	12	12	12	12	12	12	12	12	12	12
Grade (%)		0%			0%			0%			0%	
Storage Length (ft)	200		0	100		0	0		100	0		0
Storage Lanes	1		0	1		0	0		1	0		0
Taper Length (ft)	100			100			100			100		
Right Turn on Red			No			No			No			No
Link Speed (mph)		40			40			25			25	
Link Distance (ft)		1050			2258			303			468	
Travel Time (s)		17.9			38.5			8.3			12.8	
Confl. Peds. (#/hr)												
Confl. Bikes (#/hr)												
Peak Hour Factor	0.72	0.72	0.72	0.72	0.72	0.72	0.72	0.72	0.72	0.72	0.72	0.72
Growth Factor	100%	100%	100%	100%	100%	100%	100%	100%	50%	100%	100%	100%
Heavy Vehicles (%)	2%	2%	2%	5%	5%	5%	12%	12%	12%	2%	2%	2%
Bus Blockages (#/hr)	0	0	0	0	0	0	0	0	0	0	0	0
Parking (#/hr)												
Mid-Block Traffic (%)		0%			0%			0%			0%	
Shared Lane Traffic (%)												
Lane Group Flow (vph)	1	966	0	125	896	0	0	91	191	0	58	0
Turn Type	Perm	NA		pm+pt	NA		Perm	NA	Perm	Perm	NA	
Protected Phases		6		5	2			8			4	
Permitted Phases	6			2			8		8	4		
Detector Phase	6	6		5	2		8	8	8	4	4	
Switch Phase												
Minimum Initial (s)	15.0	15.0		6.0	7.0		6.0	6.0	6.0	6.0	6.0	
Minimum Split (s)	25.7	25.7		11.7	25.7		24.0	24.0	24.0	24.0	24.0	
Total Split (s)	65.7	65.7		30.7	65.7		34.0	34.0	34.0	34.0	34.0	
Total Split (%)	50.4%	50.4%		23.5%	50.4%		26.1%	26.1%	26.1%	26.1%	26.1%	
Maximum Green (s)	60.0	60.0		25.0	60.0		30.0	30.0	30.0	30.0	30.0	
Yellow Time (s)	4.5	4.5		4.5	4.5		3.0	3.0	3.0	3.0	3.0	
All-Red Time (s)	1.2	1.2		1.2	1.2		1.0	1.0	1.0	1.0	1.0	
Lost Time Adjust (s)	0.0	0.0		0.0	0.0			0.0	0.0		0.0	
Total Lost Time (s)	5.7	5.7		5.7	5.7			4.0	4.0		4.0	
Lead/Lag	Lag	Lag		Lead								
Lead-Lag Optimize?												
Vehicle Extension (s)	5.5	5.5		4.5	5.5		3.0	3.0	3.0	3.0	3.0	
Minimum Gap (s)	2.0	2.0		0.2	2.0		1.5	1.5	1.5	1.5	1.5	
Time Before Reduce (s)	0.0	0.0		0.0	0.0		0.0	0.0	0.0	0.0	0.0	
Time To Reduce (s)	0.0	0.0		0.0	0.0		0.0	0.0	0.0	0.0	0.0	
Recall Mode	Min	Min		None	Min		None	None	None	None	None	
Walk Time (s)	6.0	6.0			6.0		6.0	6.0	6.0	6.0	6.0	
Flash Dont Walk (s)	14.0	14.0			14.0		14.0	14.0	14.0	14.0	14.0	
Pedestrian Calls (#/hr)	0	0			0		0	0	0	0	0	
v/c Ratio	0.00	0.93		0.47	0.68			0.42	0.74		0.25	
Control Delay	14.0	40.2		21.9	12.3			45.2	59.3		40.6	
Queue Delay	0.0	0.0		0.0	0.0			0.0	0.0		0.0	

Lane Group	EBL	EBT	EBR	WBL	WBT	WBR	NBL	NBT	NBR	SBL	SBT	SBR
Total Delay	14.0	40.2		21.9	12.3			45.2	59.3		40.6	
Queue Length 50th (ft)	0	567		29	280			56	124		34	
Queue Length 95th (ft)	3	684		68	360			86	162		59	
Internal Link Dist (ft)		970			2178			223			388	
Turn Bay Length (ft)	200			100					100			
Base Capacity (vph)	317	1036		455	1531			342	404		365	
Starvation Cap Reductn	0	0		0	0			0	0		0	
Spillback Cap Reductn	0	0		0	0			0	0		0	
Storage Cap Reductn	0	0		0	0			0	0		0	
Reduced v/c Ratio	0.00	0.93		0.27	0.59			0.27	0.47		0.16	

Intersection Summary

Area Type: Other
Cycle Length: 130.4
Actuated Cycle Length: 107.7
Natural Cycle: 90
Control Type: Actuated-Uncoordinated
Description: Runs Free. Ped PB. No Xwalks.

Splits and Phases: 300: HS Dwy/Fairwinds Boulevard & CTH N

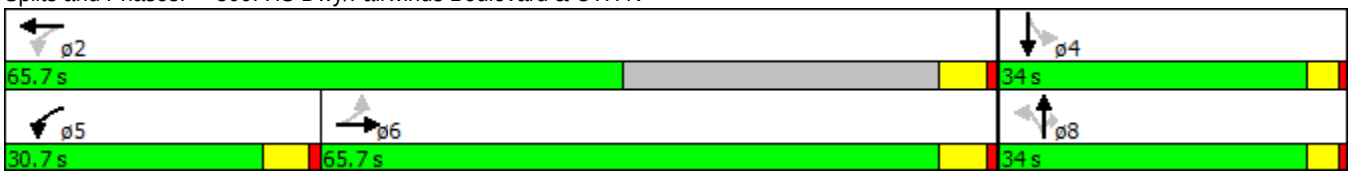

Movement	EBL	EBT	EBR	WBL	WBT	WBR	NBL	NBT	NBR	SBL	SBT	SBR
Lane Configurations												
Volume (veh/h)	1	660	35	90	635	10	65	1	275	40	1	1
Number	1	6	16	5	2	12	3	8	18	7	4	14
Initial Q (Qb), veh	0	0	0	0	0	0	0	0	0	0	0	0
Ped-Bike Adj(A_pbT)	1.00		1.00	1.00		1.00	1.00		1.00	1.00		1.00
Parking Bus, Adj	1.00	1.00	1.00	1.00	1.00	1.00	1.00	1.00	1.00	1.00	1.00	1.00
Adj Sat Flow, veh/h/ln	1863	1863	1900	1810	1810	1900	1900	1696	1696	1900	1863	1900
Adj Flow Rate, veh/h	1	917	49	125	882	14	90	1	191	56	1	1
Adj No. of Lanes	1	1	0	1	1	0	0	1	1	0	1	0
Peak Hour Factor	0.72	0.72	0.72	0.72	0.72	0.72	0.72	0.72	0.72	0.72	0.72	0.72
Percent Heavy Veh, %	2	2	2	5	5	5	12	12	12	2	2	2
Cap, veh/h	363	1051	56	280	1291	20	320	3	239	213	4	2
Arrive On Green	0.60	0.60	0.60	0.06	0.73	0.73	0.17	0.17	0.17	0.17	0.17	0.17
Sat Flow, veh/h	619	1753	94	1723	1776	28	1454	19	1442	809	23	15
Grp Volume(v), veh/h	1	0	966	125	0	896	91	0	191	58	0	0
Grp Sat Flow(s),veh/h/ln	619	0	1846	1723	0	1805	1473	0	1442	847	0	0
Q Serve(g_s), s	0.1	0.0	39.5	2.2	0.0	24.2	0.0	0.0	11.5	3.9	0.0	0.0
Cycle Q Clear(g_c), s	12.9	0.0	39.5	2.2	0.0	24.2	4.5	0.0	11.5	8.4	0.0	0.0
Prop In Lane	1.00		0.05	1.00		0.02	0.99		1.00	0.97		0.02
Lane Grp Cap(c), veh/h	363	0	1107	280	0	1311	323	0	239	219	0	0
V/C Ratio(X)	0.00	0.00	0.87	0.45	0.00	0.68	0.28	0.00	0.80	0.27	0.00	0.00
Avail Cap(c_a), veh/h	405	0	1232	649	0	1311	540	0	481	420	0	0
HCM Platoon Ratio	1.00	1.00	1.00	1.00	1.00	1.00	1.00	1.00	1.00	1.00	1.00	1.00
Upstream Filter(I)	1.00	0.00	1.00	1.00	0.00	1.00	1.00	0.00	1.00	1.00	0.00	0.00
Uniform Delay (d), s/veh	13.3	0.0	15.1	17.1	0.0	6.7	33.2	0.0	36.1	36.7	0.0	0.0
Incr Delay (d2), s/veh	0.0	0.0	8.1	1.9	0.0	2.2	0.5	0.0	6.1	0.6	0.0	0.0
Initial Q Delay(d3),s/veh	0.0	0.0	0.0	0.0	0.0	0.0	0.0	0.0	0.0	0.0	0.0	0.0
%ile BackOfQ(50%),veh/ln	0.0	0.0	22.3	2.0	0.0	12.5	2.0	0.0	5.0	1.4	0.0	0.0
LnGrp Delay(d),s/veh	13.3	0.0	23.2	19.0	0.0	8.8	33.7	0.0	42.2	37.4	0.0	0.0
LnGrp LOS	B		C	B		A	C		D	D		
Approach Vol, veh/h		967			1021			282			58	
Approach Delay, s/veh		23.2			10.1			39.5			37.4	
Approach LOS		C			B			D			D	

Timer	1	2	3	4	5	6	7	8
Assigned Phs		2		4	5	6		8
Phs Duration (G+Y+Rc), s		71.1		18.9	11.4	59.6		18.9
Change Period (Y+Rc), s		* 5.7		4.0	* 5.7	* 5.7		4.0
Max Green Setting (Gmax), s		* 60		30.0	* 25	* 60		30.0
Max Q Clear Time (g_c+I1), s		26.2		10.4	4.2	41.5		13.5
Green Ext Time (p_c), s		30.2		1.5	0.6	12.4		1.4

Intersection Summary	
HCM 2010 Ctrl Delay	19.8
HCM 2010 LOS	B

Notes

* HCM 2010 computational engine requires equal clearance times for the phases crossing the barrier.

Lane Group	WBL	WBR	NBT	NBR	SBL	SBT
Lane Configurations						
Volume (vph)	40	10	735	15	5	795
Ideal Flow (vphpl)	1900	1900	1900	1900	1900	1900
Lane Width (ft)	12	12	12	12	12	12
Grade (%)	0%		0%			0%
Storage Length (ft)	0	0		225	390	
Storage Lanes	1	1		1	1	
Taper Length (ft)	100				100	
Link Speed (mph)	25		35			35
Link Distance (ft)	580		2325			691
Travel Time (s)	15.8		45.3			13.5
Confl. Peds. (#/hr)						
Confl. Bikes (#/hr)						
Peak Hour Factor	0.92	0.92	0.92	0.92	0.92	0.92
Growth Factor	100%	100%	100%	100%	100%	100%
Heavy Vehicles (%)	2%	2%	3%	3%	4%	4%
Bus Blockages (#/hr)	0	0	0	0	0	0
Parking (#/hr)						
Mid-Block Traffic (%)	0%		0%			0%
Shared Lane Traffic (%)						
Lane Group Flow (vph)	43	11	799	16	5	864
Sign Control	Stop		Free			Free

Intersection Summary	
Area Type:	Other
Control Type: Unsignalized	

Intersection	
Int Delay, s/veh	0.5

Movement	WBL	WBR	NBT	NBR	SBL	SBT
Vol, veh/h	40	10	735	15	5	795
Conflicting Peds, #/hr	0	0	0	0	0	0
Sign Control	Stop	Stop	Free	Free	Free	Free
RT Channelized	-	None	-	None	-	None
Storage Length	0	0	-	225	390	-
Veh in Median Storage, #	2	-	0	-	-	0
Grade, %	0	-	0	-	-	0
Peak Hour Factor	92	92	92	92	92	92
Heavy Vehicles, %	2	2	3	3	4	4
Mvmt Flow	43	11	799	16	5	864

Major/Minor	Minor1		Major1		Major2	
Conflicting Flow All	1242	399	0	0	799	0
Stage 1	799	-	-	-	-	-
Stage 2	443	-	-	-	-	-
Critical Hdwy	6.84	6.94	-	-	4.18	-
Critical Hdwy Stg 1	5.84	-	-	-	-	-
Critical Hdwy Stg 2	5.84	-	-	-	-	-
Follow-up Hdwy	3.52	3.32	-	-	2.24	-
Pot Cap-1 Maneuver	167	601	-	-	807	-
Stage 1	403	-	-	-	-	-
Stage 2	614	-	-	-	-	-
Platoon blocked, %			-	-		-
Mov Cap-1 Maneuver	166	601	-	-	807	-
Mov Cap-2 Maneuver	347	-	-	-	-	-
Stage 1	403	-	-	-	-	-
Stage 2	610	-	-	-	-	-

Approach	WB	NB	SB
HCM Control Delay, s	15.7	0	0.1
HCM LOS	C		

Minor Lane/Major Mvmt	NBT	NBR	WBLn1	WBLn2	SBL	SBT
Capacity (veh/h)	-	-	347	601	807	-
HCM Lane V/C Ratio	-	-	0.125	0.018	0.007	-
HCM Control Delay (s)	-	-	16.9	11.1	9.5	-
HCM Lane LOS	-	-	C	B	A	-
HCM 95th %tile Q(veh)	-	-	0.4	0.1	0	-

Lane Group	EBL	EBT	EBR	WBL	WBT	WBR	NBL	NBT	NBR	SBL	SBT	SBR
Lane Configurations												
Volume (vph)	115	255	310	100	385	180	380	455	80	160	475	200
Ideal Flow (vphpl)	1900	1900	1900	1900	1900	1900	1900	1900	1900	1900	1900	1900
Lane Width (ft)	12	12	12	12	12	12	12	12	12	12	12	12
Grade (%)		0%			0%			0%			0%	
Storage Length (ft)	210		430	215		0	260		55	240		90
Storage Lanes	1		1	1		0	2		1	1		1
Taper Length (ft)	100			100			100			100		
Right Turn on Red			No			No			No			No
Link Speed (mph)		40			40			35			35	
Link Distance (ft)		2258			1339			1052			2325	
Travel Time (s)		38.5			22.8			20.5			45.3	
Confl. Peds. (#/hr)												
Confl. Bikes (#/hr)												
Peak Hour Factor	0.93	0.93	0.93	0.93	0.93	0.93	0.93	0.93	0.93	0.93	0.93	0.93
Growth Factor	100%	100%	50%	100%	100%	100%	100%	100%	50%	100%	100%	50%
Heavy Vehicles (%)	3%	3%	3%	1%	1%	1%	2%	2%	2%	3%	3%	3%
Bus Blockages (#/hr)	0	0	0	0	0	0	0	0	0	0	0	0
Parking (#/hr)												
Mid-Block Traffic (%)		0%			0%			0%			0%	
Shared Lane Traffic (%)												
Lane Group Flow (vph)	124	274	167	108	608	0	409	489	43	172	511	108
Turn Type	pm+pt	NA	Perm	pm+pt	NA		Prot	NA	Perm	Prot	NA	Perm
Protected Phases	7	4		3	8		1	6		5	2	
Permitted Phases	4		4	8					6			2
Detector Phase	7	4	4	3	8		1	6	6	5	2	2
Switch Phase												
Minimum Initial (s)	6.0	8.0	8.0	6.0	8.0		8.0	15.0	15.0	6.0	15.0	15.0
Minimum Split (s)	10.5	48.6	48.6	10.5	50.6		12.5	45.4	45.4	10.5	50.4	50.4
Total Split (s)	24.5	36.6	36.6	24.5	36.6		24.5	46.4	46.4	24.5	46.4	46.4
Total Split (%)	18.6%	27.7%	27.7%	18.6%	27.7%		18.6%	35.2%	35.2%	18.6%	35.2%	35.2%
Maximum Green (s)	20.0	30.0	30.0	20.0	30.0		20.0	40.0	40.0	20.0	40.0	40.0
Yellow Time (s)	3.5	4.0	4.0	3.5	4.0		3.5	3.9	3.9	3.5	3.9	3.9
All-Red Time (s)	1.0	2.6	2.6	1.0	2.6		1.0	2.5	2.5	1.0	2.5	2.5
Lost Time Adjust (s)	0.0	0.0	0.0	0.0	0.0		0.0	0.0	0.0	0.0	0.0	0.0
Total Lost Time (s)	4.5	6.6	6.6	4.5	6.6		4.5	6.4	6.4	4.5	6.4	6.4
Lead/Lag	Lead	Lag	Lag	Lead	Lag		Lead	Lag	Lag	Lead	Lag	Lag
Lead-Lag Optimize?												
Vehicle Extension (s)	1.5	1.5	1.5	1.5	1.5		1.5	4.3	4.3	1.5	3.4	3.4
Minimum Gap (s)	1.5	1.5	1.5	1.5	1.5		1.5	2.0	2.0	1.5	2.0	2.0
Time Before Reduce (s)	20.0	30.0	30.0	20.0	30.0		20.0	19.0	19.0	20.0	20.0	20.0
Time To Reduce (s)	0.0	0.0	0.0	0.0	0.0		0.0	21.0	21.0	0.0	20.0	20.0
Recall Mode	None	None	None	None	None		None	Min	Min	None	Min	Min
Walk Time (s)		7.0	7.0		7.0			7.0	7.0		7.0	7.0
Flash Dont Walk (s)		35.0	35.0		37.0			32.0	32.0		37.0	37.0
Pedestrian Calls (#/hr)		0	0		0			0	0		0	0
v/c Ratio	0.41	0.60	0.43	0.28	0.77		0.69	0.54	0.11	0.66	0.62	0.29
Control Delay	21.8	36.7	33.3	19.6	40.2		42.8	32.4	29.6	50.3	35.3	32.9
Queue Delay	0.0	0.0	0.0	0.0	0.0		0.0	0.0	0.0	0.0	0.0	0.0

Lane Group	EBL	EBT	EBR	WBL	WBT	WBR	NBL	NBT	NBR	SBL	SBT	SBR
Total Delay	21.8	36.7	33.3	19.6	40.2		42.8	32.4	29.6	50.3	35.3	32.9
Queue Length 50th (ft)	42	132	77	36	165		109	122	18	90	133	49
Queue Length 95th (ft)	91	251	159	81	268		194	216	54	185	227	114
Internal Link Dist (ft)		2178			1259			972			2245	
Turn Bay Length (ft)	210		430	215			260		55	240		90
Base Capacity (vph)	490	652	554	581	1197		805	1660	742	410	1644	735
Starvation Cap Reductn	0	0	0	0	0		0	0	0	0	0	0
Spillback Cap Reductn	0	0	0	0	0		0	0	0	0	0	0
Storage Cap Reductn	0	0	0	0	0		0	0	0	0	0	0
Reduced v/c Ratio	0.25	0.42	0.30	0.19	0.51		0.51	0.29	0.06	0.42	0.31	0.15

Intersection Summary

Area Type: Other
Cycle Length: 132
Actuated Cycle Length: 88.1
Natural Cycle: 125
Control Type: Actuated-Uncoordinated
Description: Runs Free. PB all app. Ped interval reduced to max green for HCM output.

Splits and Phases: 200: STH 83/Rochester Street & CTH N

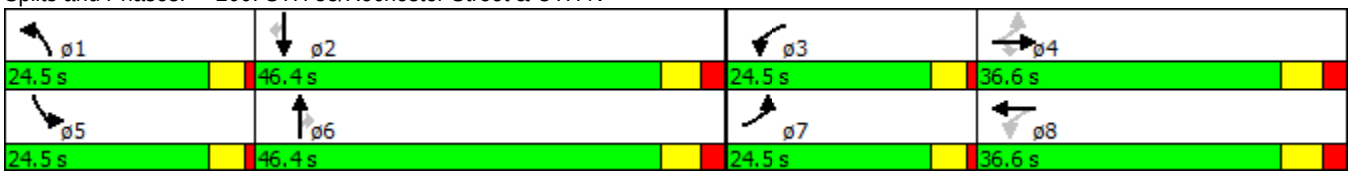

Movement	EBL	EBT	EBR	WBL	WBT	WBR	NBL	NBT	NBR	SBL	SBT	SBR
Lane Configurations												
Volume (veh/h)	115	255	310	100	385	180	380	455	80	160	475	200
Number	7	4	14	3	8	18	1	6	16	5	2	12
Initial Q (Qb), veh	0	0	0	0	0	0	0	0	0	0	0	0
Ped-Bike Adj(A_pbT)	1.00		1.00	1.00		1.00	1.00		1.00	1.00		1.00
Parking Bus, Adj	1.00	1.00	1.00	1.00	1.00	1.00	1.00	1.00	1.00	1.00	1.00	1.00
Adj Sat Flow, veh/h/ln	1845	1845	1845	1881	1881	1900	1863	1863	1863	1845	1845	1845
Adj Flow Rate, veh/h	124	274	167	108	414	194	409	489	43	172	511	108
Adj No. of Lanes	1	1	1	1	2	0	2	2	1	1	2	1
Peak Hour Factor	0.93	0.93	0.93	0.93	0.93	0.93	0.93	0.93	0.93	0.93	0.93	0.93
Percent Heavy Veh, %	3	3	3	1	1	1	2	2	2	3	3	3
Cap, veh/h	265	420	357	301	526	244	500	1092	489	209	991	443
Arrive On Green	0.07	0.23	0.23	0.07	0.22	0.22	0.15	0.31	0.31	0.12	0.28	0.28
Sat Flow, veh/h	1757	1845	1568	1792	2374	1100	3442	3539	1583	1757	3505	1568
Grp Volume(v), veh/h	124	274	167	108	311	297	409	489	43	172	511	108
Grp Sat Flow(s),veh/h/ln	1757	1845	1568	1792	1787	1687	1721	1770	1583	1757	1752	1568
Q Serve(g_s), s	4.3	10.7	7.3	3.6	13.0	13.3	9.2	8.8	1.5	7.6	9.8	4.2
Cycle Q Clear(g_c), s	4.3	10.7	7.3	3.6	13.0	13.3	9.2	8.8	1.5	7.6	9.8	4.2
Prop In Lane	1.00		1.00	1.00		0.65	1.00		1.00	1.00		1.00
Lane Grp Cap(c), veh/h	265	420	357	301	396	374	500	1092	489	209	991	443
V/C Ratio(X)	0.47	0.65	0.47	0.36	0.78	0.80	0.82	0.45	0.09	0.82	0.52	0.24
Avail Cap(c_a), veh/h	576	695	591	629	673	635	864	1777	795	441	1760	787
HCM Platoon Ratio	1.00	1.00	1.00	1.00	1.00	1.00	1.00	1.00	1.00	1.00	1.00	1.00
Upstream Filter(I)	1.00	1.00	1.00	1.00	1.00	1.00	1.00	1.00	1.00	1.00	1.00	1.00
Uniform Delay (d), s/veh	22.6	27.9	26.6	22.1	29.2	29.3	33.0	22.1	19.6	34.3	24.0	22.0
Incr Delay (d2), s/veh	0.5	0.6	0.4	0.3	1.3	1.5	1.3	0.5	0.1	3.0	0.5	0.3
Initial Q Delay(d3),s/veh	0.0	0.0	0.0	0.0	0.0	0.0	0.0	0.0	0.0	0.0	0.0	0.0
%ile BackOfQ(50%),veh/ln	2.1	5.6	3.2	1.8	6.5	6.4	4.5	4.3	0.7	3.9	4.8	1.9
LnGrp Delay(d),s/veh	23.0	28.6	27.0	22.4	30.5	30.8	34.3	22.5	19.7	37.3	24.5	22.3
LnGrp LOS	C	C	C	C	C	C	C	C	B	D	C	C
Approach Vol, veh/h		565			716			941			791	
Approach Delay, s/veh		26.9			29.4			27.5			27.0	
Approach LOS		C			C			C			C	

Timer	1	2	3	4	5	6	7	8
Assigned Phs	1	2	3	4	5	6	7	8
Phs Duration (G+Y+Rc), s	16.1	28.9	10.0	24.7	14.0	31.0	10.4	24.3
Change Period (Y+Rc), s	4.5	6.4	4.5	6.6	4.5	6.4	4.5	6.6
Max Green Setting (Gmax), s	20.0	40.0	20.0	30.0	20.0	40.0	20.0	30.0
Max Q Clear Time (g_c+I1), s	11.2	11.8	5.6	12.7	9.6	10.8	6.3	15.3
Green Ext Time (p_c), s	0.4	10.8	0.1	2.5	0.1	10.9	0.1	2.4

Intersection Summary	
HCM 2010 Ctrl Delay	27.7
HCM 2010 LOS	C

Notes

User approved pedestrian interval to be less than phase max green.

Lane Group	EBL	EBT	EBR	WBL	WBT	WBR	NBL	NBT	NBR	SBL	SBT	SBR
Lane Configurations												
Volume (vph)	10	570	10	15	915	35	35	1	90	20	1	1
Ideal Flow (vphpl)	1900	1900	1900	1900	1900	1900	1900	1900	1900	1900	1900	1900
Lane Width (ft)	12	12	12	12	12	12	12	12	12	12	12	12
Grade (%)		0%			0%			0%			0%	
Storage Length (ft)	200		0	100		0	0		100	0		0
Storage Lanes	1		0	1		0	0		1	0		0
Taper Length (ft)	100			100			100			100		
Right Turn on Red			No			No			No			No
Link Speed (mph)		40			40			25			25	
Link Distance (ft)		1050			2258			303			468	
Travel Time (s)		17.9			38.5			8.3			12.8	
Confl. Peds. (#/hr)												
Confl. Bikes (#/hr)												
Peak Hour Factor	0.91	0.91	0.91	0.91	0.91	0.91	0.91	0.91	0.91	0.91	0.91	0.91
Growth Factor	100%	100%	100%	100%	100%	100%	100%	100%	50%	100%	100%	100%
Heavy Vehicles (%)	3%	3%	3%	1%	1%	1%	1%	1%	1%	5%	5%	5%
Bus Blockages (#/hr)	0	0	0	0	0	0	0	0	0	0	0	0
Parking (#/hr)												
Mid-Block Traffic (%)		0%			0%			0%			0%	
Shared Lane Traffic (%)												
Lane Group Flow (vph)	11	637	0	16	1043	0	0	39	49	0	24	0
Turn Type	Perm	NA		pm+pt	NA		Perm	NA	Perm	Perm	NA	
Protected Phases		6		5	2			8			4	
Permitted Phases	6			2			8		8	4		
Detector Phase	6	6		5	2		8	8	8	4	4	
Switch Phase												
Minimum Initial (s)	15.0	15.0		6.0	7.0		6.0	6.0	6.0	6.0	6.0	
Minimum Split (s)	25.7	25.7		11.7	25.7		24.0	24.0	24.0	24.0	24.0	
Total Split (s)	65.7	65.7		30.7	65.7		34.0	34.0	34.0	34.0	34.0	
Total Split (%)	50.4%	50.4%		23.5%	50.4%		26.1%	26.1%	26.1%	26.1%	26.1%	
Maximum Green (s)	60.0	60.0		25.0	60.0		30.0	30.0	30.0	30.0	30.0	
Yellow Time (s)	4.5	4.5		4.5	4.5		3.0	3.0	3.0	3.0	3.0	
All-Red Time (s)	1.2	1.2		1.2	1.2		1.0	1.0	1.0	1.0	1.0	
Lost Time Adjust (s)	0.0	0.0		0.0	0.0			0.0	0.0		0.0	
Total Lost Time (s)	5.7	5.7		5.7	5.7			4.0	4.0		4.0	
Lead/Lag	Lag	Lag		Lead								
Lead-Lag Optimize?												
Vehicle Extension (s)	5.5	5.5		4.5	5.5		3.0	3.0	3.0	3.0	3.0	
Minimum Gap (s)	2.0	2.0		0.2	2.0		1.5	1.5	1.5	1.5	1.5	
Time Before Reduce (s)	0.0	0.0		0.0	0.0		0.0	0.0	0.0	0.0	0.0	
Time To Reduce (s)	0.0	0.0		0.0	0.0		0.0	0.0	0.0	0.0	0.0	
Recall Mode	Min	Min		None	Min		None	None	None	None	None	
Walk Time (s)	6.0	6.0			6.0		6.0	6.0	6.0	6.0	6.0	
Flash Dont Walk (s)	14.0	14.0			14.0		14.0	14.0	14.0	14.0	14.0	
Pedestrian Calls (#/hr)	0	0			0		0	0	0	0	0	
v/c Ratio	0.03	0.46		0.03	0.70			0.23	0.24		0.15	
Control Delay	5.6	7.0		2.7	8.4			33.0	32.6		31.5	
Queue Delay	0.0	0.0		0.0	0.0			0.0	0.0		0.0	

Lane Group	EBL	EBT	EBR	WBL	WBT	WBR	NBL	NBT	NBR	SBL	SBT	SBR
Total Delay	5.6	7.0		2.7	8.4			33.0	32.6		31.5	
Queue Length 50th (ft)	1	78		1	187			14	17		8	
Queue Length 95th (ft)	9	291		6	390			46	54		33	
Internal Link Dist (ft)		970			2178			223			388	
Turn Bay Length (ft)	200			100					100			
Base Capacity (vph)	375	1612		939	1872			646	770		619	
Starvation Cap Reductn	0	0		0	0			0	0		0	
Spillback Cap Reductn	0	0		0	0			0	0		0	
Storage Cap Reductn	0	0		0	0			0	0		0	
Reduced v/c Ratio	0.03	0.40		0.02	0.56			0.06	0.06		0.04	

Intersection Summary

Area Type: Other
Cycle Length: 130.4
Actuated Cycle Length: 65.6
Natural Cycle: 80
Control Type: Actuated-Uncoordinated
Description: Runs Free. Ped PB. No Xwalks.

Splits and Phases: 300: HS Dwy/Fairwinds Boulevard & CTH N

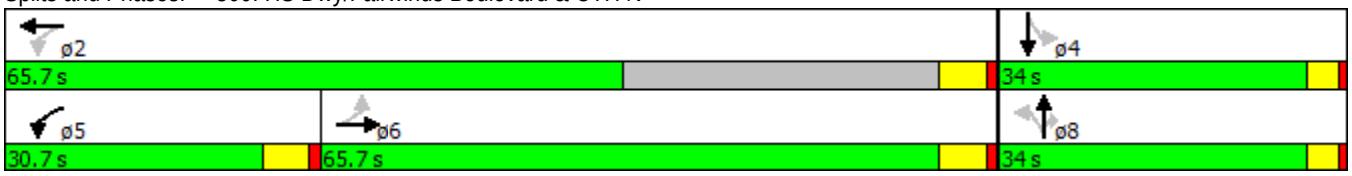

Movement	EBL	EBT	EBR	WBL	WBT	WBR	NBL	NBT	NBR	SBL	SBT	SBR
Lane Configurations												
Volume (veh/h)	10	570	10	15	915	35	35	1	90	20	1	1
Number	1	6	16	5	2	12	3	8	18	7	4	14
Initial Q (Qb), veh	0	0	0	0	0	0	0	0	0	0	0	0
Ped-Bike Adj(A_pbT)	1.00		1.00	1.00		1.00	1.00		1.00	1.00		1.00
Parking Bus, Adj	1.00	1.00	1.00	1.00	1.00	1.00	1.00	1.00	1.00	1.00	1.00	1.00
Adj Sat Flow, veh/h/ln	1845	1845	1900	1881	1881	1900	1900	1881	1881	1900	1810	1900
Adj Flow Rate, veh/h	11	626	11	16	1005	38	38	1	49	22	1	1
Adj No. of Lanes	1	1	0	1	1	0	0	1	1	0	1	0
Peak Hour Factor	0.91	0.91	0.91	0.91	0.91	0.91	0.91	0.91	0.91	0.91	0.91	0.91
Percent Heavy Veh, %	3	3	3	1	1	1	1	1	1	5	5	5
Cap, veh/h	384	1258	22	564	1433	54	209	4	117	157	7	3
Arrive On Green	0.70	0.70	0.70	0.02	0.80	0.80	0.07	0.07	0.07	0.07	0.07	0.07
Sat Flow, veh/h	534	1807	32	1792	1801	68	1545	59	1599	879	98	42
Grp Volume(v), veh/h	11	0	637	16	0	1043	39	0	49	24	0	0
Grp Sat Flow(s),veh/h/ln	534	0	1839	1792	0	1869	1604	0	1599	1019	0	0
Q Serve(g_s), s	0.7	0.0	11.9	0.2	0.0	19.1	0.0	0.0	2.2	1.0	0.0	0.0
Cycle Q Clear(g_c), s	12.4	0.0	11.9	0.2	0.0	19.1	1.5	0.0	2.2	2.6	0.0	0.0
Prop In Lane	1.00		0.02	1.00		0.04	0.97		1.00	0.92		0.04
Lane Grp Cap(c), veh/h	384	0	1280	564	0	1488	213	0	117	168	0	0
V/C Ratio(X)	0.03	0.00	0.50	0.03	0.00	0.70	0.18	0.00	0.42	0.14	0.00	0.00
Avail Cap(c_a), veh/h	446	0	1492	1129	0	1516	690	0	649	612	0	0
HCM Platoon Ratio	1.00	1.00	1.00	1.00	1.00	1.00	1.00	1.00	1.00	1.00	1.00	1.00
Upstream Filter(I)	1.00	0.00	1.00	1.00	0.00	1.00	1.00	0.00	1.00	1.00	0.00	0.00
Uniform Delay (d), s/veh	8.1	0.0	5.2	3.7	0.0	3.5	32.5	0.0	32.8	33.3	0.0	0.0
Incr Delay (d2), s/veh	0.1	0.0	0.8	0.0	0.0	2.1	0.4	0.0	2.4	0.4	0.0	0.0
Initial Q Delay(d3),s/veh	0.0	0.0	0.0	0.0	0.0	0.0	0.0	0.0	0.0	0.0	0.0	0.0
%ile BackOfQ(50%),veh/ln	0.1	0.0	6.1	0.1	0.0	10.1	0.8	0.0	1.0	0.5	0.0	0.0
LnGrp Delay(d),s/veh	8.1	0.0	6.1	3.8	0.0	5.6	32.9	0.0	35.2	33.7	0.0	0.0
LnGrp LOS	A		A	A		A	C		D	C		
Approach Vol, veh/h		648			1059			88			24	
Approach Delay, s/veh		6.1			5.6			34.2			33.7	
Approach LOS		A			A			C			C	

Timer	1	2	3	4	5	6	7	8
Assigned Phs		2		4	5	6		8
Phs Duration (G+Y+Rc), s		64.6		9.4	7.4	57.2		9.4
Change Period (Y+Rc), s		* 5.7		4.0	* 5.7	* 5.7		4.0
Max Green Setting (Gmax), s		* 60		30.0	* 25	* 60		30.0
Max Q Clear Time (g_c+I1), s		21.1		4.6	2.2	14.4		4.2
Green Ext Time (p_c), s		32.5		0.5	0.0	37.1		0.5

Intersection Summary	
HCM 2010 Ctrl Delay	7.5
HCM 2010 LOS	A

Notes

* HCM 2010 computational engine requires equal clearance times for the phases crossing the barrier.

APPENDIX C

EXISTING TRANSPORTATION SYSTEM WITH BUILD TRAFFIC OPERATIONAL ANALYSIS

C1. Base Year 2016 Build Traffic

Lane Group	WBL	WBR	NBT	NBR	SBL	SBT
Lane Configurations						
Volume (vph)	165	95	600	175	95	500
Ideal Flow (vphpl)	1900	1900	1900	1900	1900	1900
Lane Width (ft)	12	12	12	12	12	12
Grade (%)	0%		0%			0%
Storage Length (ft)	0	0		225	390	
Storage Lanes	1	1		1	1	
Taper Length (ft)	100				100	
Link Speed (mph)	25		35			35
Link Distance (ft)	580		2325			691
Travel Time (s)	15.8		45.3			13.5
Confl. Peds. (#/hr)						
Confl. Bikes (#/hr)						
Peak Hour Factor	0.88	0.88	0.88	0.88	0.88	0.88
Growth Factor	100%	100%	100%	100%	100%	100%
Heavy Vehicles (%)	25%	25%	5%	5%	7%	7%
Bus Blockages (#/hr)	0	0	0	0	0	0
Parking (#/hr)						
Mid-Block Traffic (%)	0%		0%			0%
Shared Lane Traffic (%)						
Lane Group Flow (vph)	188	108	682	199	108	568
Sign Control	Stop		Free			Free

Intersection Summary	
Area Type:	Other
Control Type: Unsignalized	

Intersection	
Int Delay, s/veh	4.6

Movement	WBL	WBR	NBT	NBR	SBL	SBT
Vol, veh/h	165	95	600	175	95	500
Conflicting Peds, #/hr	0	0	0	0	0	0
Sign Control	Stop	Stop	Free	Free	Free	Free
RT Channelized	-	None	-	None	-	None
Storage Length	0	0	-	225	390	-
Veh in Median Storage, #	2	-	0	-	-	0
Grade, %	0	-	0	-	-	0
Peak Hour Factor	88	88	88	88	88	88
Heavy Vehicles, %	25	25	5	5	7	7
Mvmt Flow	188	108	682	199	108	568

Major/Minor	Minor1		Major1		Major2	
Conflicting Flow All	1182	341	0	0	682	0
Stage 1	682	-	-	-	-	-
Stage 2	500	-	-	-	-	-
Critical Hdwy	7.3	7.4	-	-	4.24	-
Critical Hdwy Stg 1	6.3	-	-	-	-	-
Critical Hdwy Stg 2	6.3	-	-	-	-	-
Follow-up Hdwy	3.75	3.55	-	-	2.27	-
Pot Cap-1 Maneuver	~ 152	592	-	-	874	-
Stage 1	407	-	-	-	-	-
Stage 2	513	-	-	-	-	-
Platoon blocked, %			-	-		-
Mov Cap-1 Maneuver	~ 133	592	-	-	874	-
Mov Cap-2 Maneuver	312	-	-	-	-	-
Stage 1	407	-	-	-	-	-
Stage 2	450	-	-	-	-	-

Approach	WB	NB	SB
HCM Control Delay, s	25.2	0	1.5
HCM LOS	D		

Minor Lane/Major Mvmt	NBT	NBR	WBLn1	WBLn2	SBL	SBT
Capacity (veh/h)	-	-	312	592	874	-
HCM Lane V/C Ratio	-	-	0.601	0.182	0.124	-
HCM Control Delay (s)	-	-	32.5	12.4	9.7	-
HCM Lane LOS	-	-	D	B	A	-
HCM 95th %tile Q(veh)	-	-	3.7	0.7	0.4	-

Notes

~: Volume exceeds capacity $: Delay exceeds 300s +: Computation Not Defined *: All major volume in platoon

Lane Group	EBL	EBT	EBR	WBL	WBT	WBR	NBL	NBT	NBR	SBL	SBT	SBR
Lane Configurations												
Volume (vph)	185	375	360	35	350	165	280	425	75	190	415	60
Ideal Flow (vphpl)	1900	1900	1900	1900	1900	1900	1900	1900	1900	1900	1900	1900
Lane Width (ft)	12	12	12	12	12	12	12	12	12	12	12	12
Grade (%)		0%			0%			0%			0%	
Storage Length (ft)	210		430	215		0	260		55	240		90
Storage Lanes	1		1	1		0	2		1	1		1
Taper Length (ft)	100			100			100			100		
Right Turn on Red			No			No			No			No
Link Speed (mph)		40			40			35			35	
Link Distance (ft)		2258			1339			1052			2325	
Travel Time (s)		38.5			22.8			20.5			45.3	
Confl. Peds. (#/hr)												
Confl. Bikes (#/hr)												
Peak Hour Factor	0.81	0.81	0.81	0.81	0.81	0.81	0.81	0.81	0.81	0.81	0.81	0.81
Growth Factor	100%	100%	50%	100%	100%	100%	100%	100%	50%	100%	100%	50%
Heavy Vehicles (%)	5%	5%	5%	5%	5%	5%	10%	10%	10%	7%	7%	7%
Bus Blockages (#/hr)	0	0	0	0	0	0	0	0	0	0	0	0
Parking (#/hr)												
Mid-Block Traffic (%)		0%			0%			0%			0%	
Shared Lane Traffic (%)												
Lane Group Flow (vph)	228	463	222	43	636	0	346	525	46	235	512	37
Turn Type	pm+pt	NA	Perm	pm+pt	NA		Prot	NA	Perm	Prot	NA	Perm
Protected Phases	7	4		3	8		1	6		5	2	
Permitted Phases	4		4	8					6			2
Detector Phase	7	4	4	3	8		1	6	6	5	2	2
Switch Phase												
Minimum Initial (s)	6.0	8.0	8.0	6.0	8.0		8.0	15.0	15.0	6.0	15.0	15.0
Minimum Split (s)	10.5	48.6	48.6	10.5	50.6		12.5	45.4	45.4	10.5	50.4	50.4
Total Split (s)	24.5	36.6	36.6	24.5	36.6		24.5	46.4	46.4	24.5	46.4	46.4
Total Split (%)	18.6%	27.7%	27.7%	18.6%	27.7%		18.6%	35.2%	35.2%	18.6%	35.2%	35.2%
Maximum Green (s)	20.0	30.0	30.0	20.0	30.0		20.0	40.0	40.0	20.0	40.0	40.0
Yellow Time (s)	3.5	4.0	4.0	3.5	4.0		3.5	3.9	3.9	3.5	3.9	3.9
All-Red Time (s)	1.0	2.6	2.6	1.0	2.6		1.0	2.5	2.5	1.0	2.5	2.5
Lost Time Adjust (s)	0.0	0.0	0.0	0.0	0.0		0.0	0.0	0.0	0.0	0.0	0.0
Total Lost Time (s)	4.5	6.6	6.6	4.5	6.6		4.5	6.4	6.4	4.5	6.4	6.4
Lead/Lag	Lead	Lag	Lag	Lead	Lag		Lead	Lag	Lag	Lead	Lag	Lag
Lead-Lag Optimize?												
Vehicle Extension (s)	1.5	1.5	1.5	1.5	1.5		1.5	4.3	4.3	1.5	3.4	3.4
Minimum Gap (s)	1.5	1.5	1.5	1.5	1.5		1.5	2.0	2.0	1.5	2.0	2.0
Time Before Reduce (s)	20.0	30.0	30.0	20.0	30.0		20.0	19.0	19.0	20.0	20.0	20.0
Time To Reduce (s)	0.0	0.0	0.0	0.0	0.0		0.0	21.0	21.0	0.0	20.0	20.0
Recall Mode	None	None	None	None	None		None	Min	Min	None	Min	Min
Walk Time (s)		7.0	7.0		7.0			7.0	7.0		7.0	7.0
Flash Dont Walk (s)		35.0	35.0		37.0			32.0	32.0		37.0	37.0
Pedestrian Calls (#/hr)		0	0		0			0	0		0	0
v/c Ratio	0.66	0.71	0.40	0.15	0.83		0.75	0.69	0.14	0.78	0.57	0.09
Control Delay	29.6	38.3	30.3	20.5	49.5		55.2	42.9	35.4	62.3	37.7	33.4
Queue Delay	0.0	0.0	0.0	0.0	0.0		0.0	0.0	0.0	0.0	0.0	0.0

Lane Group	EBL	EBT	EBR	WBL	WBT	WBR	NBL	NBT	NBR	SBL	SBT	SBR
Total Delay	29.6	38.3	30.3	20.5	49.5		55.2	42.9	35.4	62.3	37.7	33.4
Queue Length 50th (ft)	99	288	120	17	216		117	172	25	152	156	19
Queue Length 95th (ft)	152	394	186	37	285		167	226	55	#277	218	46
Internal Link Dist (ft)		2178			1259			972			2245	
Turn Bay Length (ft)	210		430	215			260		55	240		90
Base Capacity (vph)	425	649	552	496	969		628	1296	579	333	1332	595
Starvation Cap Reductn	0	0	0	0	0		0	0	0	0	0	0
Spillback Cap Reductn	0	0	0	0	0		0	0	0	0	0	0
Storage Cap Reductn	0	0	0	0	0		0	0	0	0	0	0
Reduced v/c Ratio	0.54	0.71	0.40	0.09	0.66		0.55	0.41	0.08	0.71	0.38	0.06

Intersection Summary

Area Type: Other
Cycle Length: 132
Actuated Cycle Length: 104.2
Natural Cycle: 125
Control Type: Actuated-Uncoordinated
Description: Runs Free. PB all app. Ped interval reduced to max green for HCM output.
95th percentile volume exceeds capacity, queue may be longer.
Queue shown is maximum after two cycles.

Splits and Phases: 200: STH 83/Rochester Street & CTH N

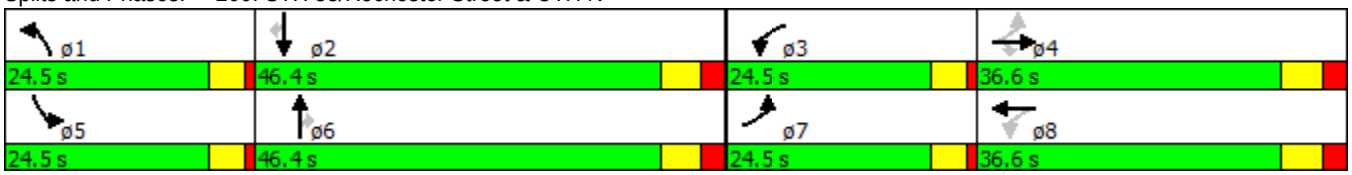

Movement	EBL	EBT	EBR	WBL	WBT	WBR	NBL	NBT	NBR	SBL	SBT	SBR
Lane Configurations												
Volume (veh/h)	185	375	360	35	350	165	280	425	75	190	415	60
Number	7	4	14	3	8	18	1	6	16	5	2	12
Initial Q (Qb), veh	0	0	0	0	0	0	0	0	0	0	0	0
Ped-Bike Adj(A_pbT)	1.00		1.00	1.00		1.00	1.00		1.00	1.00		1.00
Parking Bus, Adj	1.00	1.00	1.00	1.00	1.00	1.00	1.00	1.00	1.00	1.00	1.00	1.00
Adj Sat Flow, veh/h/ln	1810	1810	1810	1810	1810	1900	1727	1727	1727	1776	1776	1776
Adj Flow Rate, veh/h	228	463	222	43	432	204	346	525	46	235	512	37
Adj No. of Lanes	1	1	1	1	2	0	2	2	1	1	2	1
Peak Hour Factor	0.81	0.81	0.81	0.81	0.81	0.81	0.81	0.81	0.81	0.81	0.81	0.81
Percent Heavy Veh, %	5	5	5	5	5	5	10	10	10	7	7	7
Cap, veh/h	315	555	472	197	527	246	414	874	391	266	993	444
Arrive On Green	0.12	0.31	0.31	0.04	0.23	0.23	0.13	0.27	0.27	0.16	0.29	0.29
Sat Flow, veh/h	1723	1810	1538	1723	2276	1065	3191	3282	1468	1691	3374	1509
Grp Volume(v), veh/h	228	463	222	43	325	311	346	525	46	235	512	37
Grp Sat Flow(s),veh/h/ln	1723	1810	1538	1723	1719	1622	1596	1641	1468	1691	1687	1509
Q Serve(g_s), s	9.3	23.1	11.3	1.8	17.4	17.7	10.3	13.5	2.3	13.2	12.2	1.7
Cycle Q Clear(g_c), s	9.3	23.1	11.3	1.8	17.4	17.7	10.3	13.5	2.3	13.2	12.2	1.7
Prop In Lane	1.00		1.00	1.00		0.66	1.00		1.00	1.00		1.00
Lane Grp Cap(c), veh/h	315	555	472	197	398	375	414	874	391	266	993	444
V/C Ratio(X)	0.72	0.83	0.47	0.22	0.82	0.83	0.84	0.60	0.12	0.88	0.52	0.08
Avail Cap(c_a), veh/h	468	560	476	480	532	502	659	1355	606	349	1393	623
HCM Platoon Ratio	1.00	1.00	1.00	1.00	1.00	1.00	1.00	1.00	1.00	1.00	1.00	1.00
Upstream Filter(I)	1.00	1.00	1.00	1.00	1.00	1.00	1.00	1.00	1.00	1.00	1.00	1.00
Uniform Delay (d), s/veh	24.9	31.3	27.2	27.6	35.3	35.4	41.2	31.0	26.9	40.0	28.5	24.7
Incr Delay (d2), s/veh	1.2	9.8	0.3	0.2	5.4	6.4	2.7	1.1	0.2	15.7	0.5	0.1
Initial Q Delay(d3),s/veh	0.0	0.0	0.0	0.0	0.0	0.0	0.0	0.0	0.0	0.0	0.0	0.0
%ile BackOfQ(50%),veh/ln	4.5	13.0	4.9	0.9	8.8	8.5	4.7	6.3	1.0	7.3	5.8	0.7
LnGrp Delay(d),s/veh	26.0	41.1	27.5	27.8	40.7	41.8	43.9	32.1	27.1	55.6	28.9	24.8
LnGrp LOS	C	D	C	C	D	D	D	C	C	E	C	C
Approach Vol, veh/h		913			679			917			784	
Approach Delay, s/veh		34.0			40.4			36.3			36.8	
Approach LOS		C			D			D			D	

Timer	1	2	3	4	5	6	7	8
Assigned Phs	1	2	3	4	5	6	7	8
Phs Duration (G+Y+Rc), s	17.1	34.9	8.6	36.3	19.7	32.2	15.9	29.0
Change Period (Y+Rc), s	4.5	6.4	4.5	6.6	4.5	6.4	4.5	6.6
Max Green Setting (Gmax), s	20.0	40.0	20.0	30.0	20.0	40.0	20.0	30.0
Max Q Clear Time (g_c+I1), s	12.3	14.2	3.8	25.1	15.2	15.5	11.3	19.7
Green Ext Time (p_c), s	0.3	10.5	0.0	1.8	0.1	10.3	0.1	2.8

Intersection Summary	
HCM 2010 Ctrl Delay	36.6
HCM 2010 LOS	D

Notes

User approved pedestrian interval to be less than phase max green.

Lane Group	EBL	EBT	EBR	WBL	WBT	WBR	NBL	NBT	NBR	SBL	SBT	SBR
Lane Configurations												
Volume (vph)	1	610	30	90	590	10	60	1	270	40	1	1
Ideal Flow (vphpl)	1900	1900	1900	1900	1900	1900	1900	1900	1900	1900	1900	1900
Lane Width (ft)	12	12	12	12	12	12	12	12	12	12	12	12
Grade (%)		0%			0%			0%			0%	
Storage Length (ft)	200		0	100		0	0		100	0		0
Storage Lanes	1		0	1		0	0		1	0		0
Taper Length (ft)	100			100			100			100		
Right Turn on Red			No			No			No			No
Link Speed (mph)		40			40			25			25	
Link Distance (ft)		1050			2258			303			468	
Travel Time (s)		17.9			38.5			8.3			12.8	
Confl. Peds. (#/hr)												
Confl. Bikes (#/hr)												
Peak Hour Factor	0.72	0.72	0.72	0.72	0.72	0.72	0.72	0.72	0.72	0.72	0.72	0.72
Growth Factor	100%	100%	100%	100%	100%	100%	100%	100%	50%	100%	100%	100%
Heavy Vehicles (%)	2%	2%	2%	5%	5%	5%	12%	12%	12%	2%	2%	2%
Bus Blockages (#/hr)	0	0	0	0	0	0	0	0	0	0	0	0
Parking (#/hr)												
Mid-Block Traffic (%)		0%			0%			0%			0%	
Shared Lane Traffic (%)												
Lane Group Flow (vph)	1	889	0	125	833	0	0	84	188	0	58	0
Turn Type	Perm	NA		pm+pt	NA		Perm	NA	Perm	Perm	NA	
Protected Phases		6		5	2			8			4	
Permitted Phases	6			2			8		8	4		
Detector Phase	6	6		5	2		8	8	8	4	4	
Switch Phase												
Minimum Initial (s)	15.0	15.0		6.0	7.0		6.0	6.0	6.0	6.0	6.0	
Minimum Split (s)	25.7	25.7		11.7	25.7		24.0	24.0	24.0	24.0	24.0	
Total Split (s)	65.7	65.7		30.7	65.7		34.0	34.0	34.0	34.0	34.0	
Total Split (%)	50.4%	50.4%		23.5%	50.4%		26.1%	26.1%	26.1%	26.1%	26.1%	
Maximum Green (s)	60.0	60.0		25.0	60.0		30.0	30.0	30.0	30.0	30.0	
Yellow Time (s)	4.5	4.5		4.5	4.5		3.0	3.0	3.0	3.0	3.0	
All-Red Time (s)	1.2	1.2		1.2	1.2		1.0	1.0	1.0	1.0	1.0	
Lost Time Adjust (s)	0.0	0.0		0.0	0.0			0.0	0.0		0.0	
Total Lost Time (s)	5.7	5.7		5.7	5.7			4.0	4.0		4.0	
Lead/Lag	Lag	Lag		Lead								
Lead-Lag Optimize?												
Vehicle Extension (s)	5.5	5.5		4.5	5.5		3.0	3.0	3.0	3.0	3.0	
Minimum Gap (s)	2.0	2.0		0.2	2.0		1.5	1.5	1.5	1.5	1.5	
Time Before Reduce (s)	0.0	0.0		0.0	0.0		0.0	0.0	0.0	0.0	0.0	
Time To Reduce (s)	0.0	0.0		0.0	0.0		0.0	0.0	0.0	0.0	0.0	
Recall Mode	Min	Min		None	Min		None	None	None	None	None	
Walk Time (s)	6.0	6.0			6.0		6.0	6.0	6.0	6.0	6.0	
Flash Dont Walk (s)	14.0	14.0			14.0		14.0	14.0	14.0	14.0	14.0	
Pedestrian Calls (#/hr)	0	0			0		0	0	0	0	0	
v/c Ratio	0.00	0.86		0.40	0.63			0.39	0.74		0.25	
Control Delay	14.0	31.7		9.9	10.7			44.8	60.0		41.0	
Queue Delay	0.0	0.0		0.0	0.0			0.0	0.0		0.0	

Lane Group	EBL	EBT	EBR	WBL	WBT	WBR	NBL	NBT	NBR	SBL	SBT	SBR
Total Delay	14.0	31.7		9.9	10.7			44.8	60.0		41.0	
Queue Length 50th (ft)	0	481		21	241			51	123		34	
Queue Length 95th (ft)	3	580		40	308			81	161		59	
Internal Link Dist (ft)		970			2178			223			388	
Turn Bay Length (ft)	200			100					100			
Base Capacity (vph)	364	1039		494	1531			343	404		367	
Starvation Cap Reductn	0	0		0	0			0	0		0	
Spillback Cap Reductn	0	0		0	0			0	0		0	
Storage Cap Reductn	0	0		0	0			0	0		0	
Reduced v/c Ratio	0.00	0.86		0.25	0.54			0.24	0.47		0.16	

Intersection Summary

Area Type: Other
Cycle Length: 130.4
Actuated Cycle Length: 107.5
Natural Cycle: 90
Control Type: Actuated-Uncoordinated
Description: Runs Free. Ped PB. No Xwalks.

Splits and Phases: 300: HS Dwy/Fairwinds Boulevard & CTH N

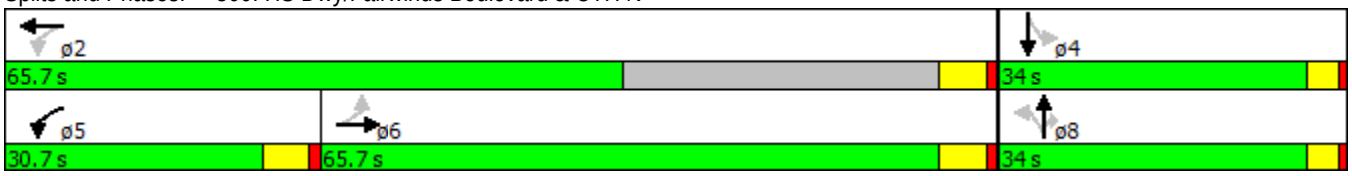

Movement	EBL	EBT	EBR	WBL	WBT	WBR	NBL	NBT	NBR	SBL	SBT	SBR
Lane Configurations												
Volume (veh/h)	1	610	30	90	590	10	60	1	270	40	1	1
Number	1	6	16	5	2	12	3	8	18	7	4	14
Initial Q (Qb), veh	0	0	0	0	0	0	0	0	0	0	0	0
Ped-Bike Adj(A_pbT)	1.00		1.00	1.00		1.00	1.00		1.00	1.00		1.00
Parking Bus, Adj	1.00	1.00	1.00	1.00	1.00	1.00	1.00	1.00	1.00	1.00	1.00	1.00
Adj Sat Flow, veh/h/ln	1863	1863	1900	1810	1810	1900	1900	1696	1696	1900	1863	1900
Adj Flow Rate, veh/h	1	847	42	125	819	14	83	1	188	56	1	1
Adj No. of Lanes	1	1	0	1	1	0	0	1	1	0	1	0
Peak Hour Factor	0.72	0.72	0.72	0.72	0.72	0.72	0.72	0.72	0.72	0.72	0.72	0.72
Percent Heavy Veh, %	2	2	2	5	5	5	12	12	12	2	2	2
Cap, veh/h	405	1053	52	329	1290	22	317	3	236	216	4	2
Arrive On Green	0.60	0.60	0.60	0.06	0.73	0.73	0.16	0.16	0.16	0.16	0.16	0.16
Sat Flow, veh/h	656	1760	87	1723	1774	30	1447	20	1442	835	24	15
Grp Volume(v), veh/h	1	0	889	125	0	833	84	0	188	58	0	0
Grp Sat Flow(s),veh/h/ln	656	0	1847	1723	0	1804	1467	0	1442	874	0	0
Q Serve(g_s), s	0.1	0.0	33.0	2.2	0.0	20.7	0.0	0.0	11.1	3.8	0.0	0.0
Cycle Q Clear(g_c), s	9.4	0.0	33.0	2.2	0.0	20.7	4.1	0.0	11.1	7.9	0.0	0.0
Prop In Lane	1.00		0.05	1.00		0.02	0.99		1.00	0.97		0.02
Lane Grp Cap(c), veh/h	405	0	1105	329	0	1312	321	0	236	223	0	0
V/C Ratio(X)	0.00	0.00	0.80	0.38	0.00	0.64	0.26	0.00	0.80	0.26	0.00	0.00
Avail Cap(c_a), veh/h	457	0	1251	704	0	1312	546	0	488	433	0	0
HCM Platoon Ratio	1.00	1.00	1.00	1.00	1.00	1.00	1.00	1.00	1.00	1.00	1.00	1.00
Upstream Filter(I)	1.00	0.00	1.00	1.00	0.00	1.00	1.00	0.00	1.00	1.00	0.00	0.00
Uniform Delay (d), s/veh	11.4	0.0	13.8	13.5	0.0	6.1	32.7	0.0	35.6	36.0	0.0	0.0
Incr Delay (d2), s/veh	0.0	0.0	4.9	1.2	0.0	1.7	0.4	0.0	6.1	0.6	0.0	0.0
Initial Q Delay(d3),s/veh	0.0	0.0	0.0	0.0	0.0	0.0	0.0	0.0	0.0	0.0	0.0	0.0
%ile BackOfQ(50%),veh/ln	0.0	0.0	18.0	1.6	0.0	10.8	1.9	0.0	4.8	1.3	0.0	0.0
LnGrp Delay(d),s/veh	11.4	0.0	18.7	14.7	0.0	7.8	33.1	0.0	41.7	36.6	0.0	0.0
LnGrp LOS	B		B	B		A	C		D	D		
Approach Vol, veh/h		890			958			272			58	
Approach Delay, s/veh		18.7			8.7			39.1			36.6	
Approach LOS		B			A			D			D	

Timer	1	2	3	4	5	6	7	8
Assigned Phs		2		4	5	6		8
Phs Duration (G+Y+Rc), s		70.1		18.5	11.4	58.7		18.5
Change Period (Y+Rc), s		* 5.7		4.0	* 5.7	* 5.7		4.0
Max Green Setting (Gmax), s		* 60		30.0	* 25	* 60		30.0
Max Q Clear Time (g_c+I1), s		22.7		9.9	4.2	35.0		13.1
Green Ext Time (p_c), s		31.2		1.5	0.6	17.9		1.4

Intersection Summary	
HCM 2010 Ctrl Delay	17.3
HCM 2010 LOS	B

Notes

* HCM 2010 computational engine requires equal clearance times for the phases crossing the barrier.

Lane Group	WBL	WBR	NBT	NBR	SBL	SBT
Lane Configurations						
Volume (vph)	180	85	645	145	95	685
Ideal Flow (vphpl)	1900	1900	1900	1900	1900	1900
Lane Width (ft)	12	12	12	12	12	12
Grade (%)	0%		0%			0%
Storage Length (ft)	0	0		225	390	
Storage Lanes	1	1		1	1	
Taper Length (ft)	100				100	
Link Speed (mph)	25		35			35
Link Distance (ft)	580		2325			691
Travel Time (s)	15.8		45.3			13.5
Confl. Peds. (#/hr)						
Confl. Bikes (#/hr)						
Peak Hour Factor	0.92	0.92	0.92	0.92	0.92	0.92
Growth Factor	100%	100%	100%	100%	100%	100%
Heavy Vehicles (%)	2%	2%	3%	3%	4%	4%
Bus Blockages (#/hr)	0	0	0	0	0	0
Parking (#/hr)						
Mid-Block Traffic (%)	0%		0%			0%
Shared Lane Traffic (%)						
Lane Group Flow (vph)	196	92	701	158	103	745
Sign Control	Stop		Free			Free

Intersection Summary	
Area Type:	Other
Control Type: Unsignalized	

Intersection	
Int Delay, s/veh	4

Movement	WBL	WBR	NBT	NBR	SBL	SBT
Vol, veh/h	180	85	645	145	95	685
Conflicting Peds, #/hr	0	0	0	0	0	0
Sign Control	Stop	Stop	Free	Free	Free	Free
RT Channelized	-	None	-	None	-	None
Storage Length	0	0	-	225	390	-
Veh in Median Storage, #	2	-	0	-	-	0
Grade, %	0	-	0	-	-	0
Peak Hour Factor	92	92	92	92	92	92
Heavy Vehicles, %	2	2	3	3	4	4
Mvmt Flow	196	92	701	158	103	745

Major/Minor	Minor1		Major1		Major2	
Conflicting Flow All	1280	351	0	0	701	0
Stage 1	701	-	-	-	-	-
Stage 2	579	-	-	-	-	-
Critical Hdwy	6.84	6.94	-	-	4.18	-
Critical Hdwy Stg 1	5.84	-	-	-	-	-
Critical Hdwy Stg 2	5.84	-	-	-	-	-
Follow-up Hdwy	3.52	3.32	-	-	2.24	-
Pot Cap-1 Maneuver	~ 158	645	-	-	879	-
Stage 1	453	-	-	-	-	-
Stage 2	524	-	-	-	-	-
Platoon blocked, %			-	-		-
Mov Cap-1 Maneuver	~ 139	645	-	-	879	-
Mov Cap-2 Maneuver	334	-	-	-	-	-
Stage 1	453	-	-	-	-	-
Stage 2	463	-	-	-	-	-

Approach	WB	NB	SB
HCM Control Delay, s	24	0	1.2
HCM LOS	C		

Minor Lane/Major Mvmt	NBT	NBR	WBLn1	WBLn2	SBL	SBT
Capacity (veh/h)	-	-	334	645	879	-
HCM Lane V/C Ratio	-	-	0.586	0.143	0.117	-
HCM Control Delay (s)	-	-	29.9	11.5	9.6	-
HCM Lane LOS	-	-	D	B	A	-
HCM 95th %tile Q(veh)	-	-	3.5	0.5	0.4	-

Notes

~: Volume exceeds capacity $: Delay exceeds 300s +: Computation Not Defined *: All major volume in platoon

Lane Group	EBL	EBT	EBR	WBL	WBT	WBR	NBL	NBT	NBR	SBL	SBT	SBR
Lane Configurations												
Volume (vph)	120	230	295	95	355	195	360	475	80	175	495	195
Ideal Flow (vphpl)	1900	1900	1900	1900	1900	1900	1900	1900	1900	1900	1900	1900
Lane Width (ft)	12	12	12	12	12	12	12	12	12	12	12	12
Grade (%)		0%			0%			0%			0%	
Storage Length (ft)	210		430	215		0	260		55	240		90
Storage Lanes	1		1	1		0	2		1	1		1
Taper Length (ft)	100			100			100			100		
Right Turn on Red			No			No			No			No
Link Speed (mph)		40			40			35			35	
Link Distance (ft)		2258			1339			1052			2325	
Travel Time (s)		38.5			22.8			20.5			45.3	
Confl. Peds. (#/hr)												
Confl. Bikes (#/hr)												
Peak Hour Factor	0.93	0.93	0.93	0.93	0.93	0.93	0.93	0.93	0.93	0.93	0.93	0.93
Growth Factor	100%	100%	50%	100%	100%	100%	100%	100%	50%	100%	100%	50%
Heavy Vehicles (%)	3%	3%	3%	1%	1%	1%	2%	2%	2%	3%	3%	3%
Bus Blockages (#/hr)	0	0	0	0	0	0	0	0	0	0	0	0
Parking (#/hr)												
Mid-Block Traffic (%)		0%			0%			0%			0%	
Shared Lane Traffic (%)												
Lane Group Flow (vph)	129	247	159	102	592	0	387	511	43	188	532	105
Turn Type	pm+pt	NA	Perm	pm+pt	NA		Prot	NA	Perm	Prot	NA	Perm
Protected Phases	7	4		3	8		1	6		5	2	
Permitted Phases	4		4	8					6			2
Detector Phase	7	4	4	3	8		1	6	6	5	2	2
Switch Phase												
Minimum Initial (s)	6.0	8.0	8.0	6.0	8.0		8.0	15.0	15.0	6.0	15.0	15.0
Minimum Split (s)	10.5	48.6	48.6	10.5	50.6		12.5	45.4	45.4	10.5	50.4	50.4
Total Split (s)	24.5	36.6	36.6	24.5	36.6		24.5	46.4	46.4	24.5	46.4	46.4
Total Split (%)	18.6%	27.7%	27.7%	18.6%	27.7%		18.6%	35.2%	35.2%	18.6%	35.2%	35.2%
Maximum Green (s)	20.0	30.0	30.0	20.0	30.0		20.0	40.0	40.0	20.0	40.0	40.0
Yellow Time (s)	3.5	4.0	4.0	3.5	4.0		3.5	3.9	3.9	3.5	3.9	3.9
All-Red Time (s)	1.0	2.6	2.6	1.0	2.6		1.0	2.5	2.5	1.0	2.5	2.5
Lost Time Adjust (s)	0.0	0.0	0.0	0.0	0.0		0.0	0.0	0.0	0.0	0.0	0.0
Total Lost Time (s)	4.5	6.6	6.6	4.5	6.6		4.5	6.4	6.4	4.5	6.4	6.4
Lead/Lag	Lead	Lag	Lag	Lead	Lag		Lead	Lag	Lag	Lead	Lag	Lag
Lead-Lag Optimize?												
Vehicle Extension (s)	1.5	1.5	1.5	1.5	1.5		1.5	4.3	4.3	1.5	3.4	3.4
Minimum Gap (s)	1.5	1.5	1.5	1.5	1.5		1.5	2.0	2.0	1.5	2.0	2.0
Time Before Reduce (s)	20.0	30.0	30.0	20.0	30.0		20.0	19.0	19.0	20.0	20.0	20.0
Time To Reduce (s)	0.0	0.0	0.0	0.0	0.0		0.0	21.0	21.0	0.0	20.0	20.0
Recall Mode	None	None	None	None	None		None	Min	Min	None	Min	Min
Walk Time (s)		7.0	7.0		7.0			7.0	7.0		7.0	7.0
Flash Dont Walk (s)		35.0	35.0		37.0			32.0	32.0		37.0	37.0
Pedestrian Calls (#/hr)		0	0		0			0	0		0	0
v/c Ratio	0.41	0.48	0.36	0.23	0.77		0.69	0.58	0.11	0.67	0.63	0.28
Control Delay	21.8	32.8	31.5	19.2	40.5		43.6	33.9	30.2	50.2	34.9	32.2
Queue Delay	0.0	0.0	0.0	0.0	0.0		0.0	0.0	0.0	0.0	0.0	0.0

Lane Group	EBL	EBT	EBR	WBL	WBT	WBR	NBL	NBT	NBR	SBL	SBT	SBR
Total Delay	21.8	32.8	31.5	19.2	40.5		43.6	33.9	30.2	50.2	34.9	32.2
Queue Length 50th (ft)	44	118	73	34	162		105	131	18	99	137	47
Queue Length 95th (ft)	96	227	153	78	266		187	228	55	204	238	111
Internal Link Dist (ft)		2178			1259			972			2245	
Turn Bay Length (ft)	210		430	215			260		55	240		90
Base Capacity (vph)	489	657	558	621	1193		806	1663	743	411	1647	736
Starvation Cap Reductn	0	0	0	0	0		0	0	0	0	0	0
Spillback Cap Reductn	0	0	0	0	0		0	0	0	0	0	0
Storage Cap Reductn	0	0	0	0	0		0	0	0	0	0	0
Reduced v/c Ratio	0.26	0.38	0.28	0.16	0.50		0.48	0.31	0.06	0.46	0.32	0.14

Intersection Summary

Area Type: Other
Cycle Length: 132
Actuated Cycle Length: 88.3
Natural Cycle: 125
Control Type: Actuated-Uncoordinated
Description: Runs Free. PB all app. Ped interval reduced to max green for HCM output.

Splits and Phases: 200: STH 83/Rochester Street & CTH N

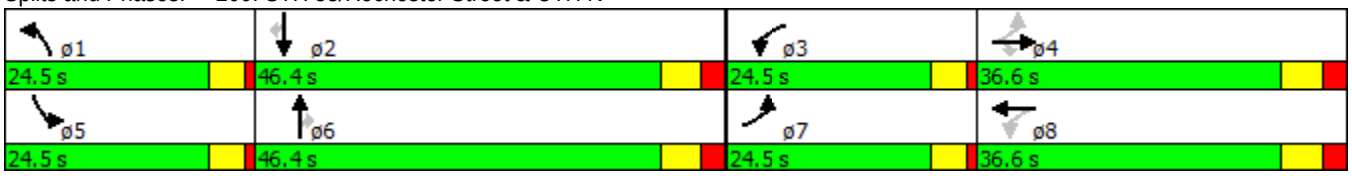

Movement	EBL	EBT	EBR	WBL	WBT	WBR	NBL	NBT	NBR	SBL	SBT	SBR
Lane Configurations												
Volume (veh/h)	120	230	295	95	355	195	360	475	80	175	495	195
Number	7	4	14	3	8	18	1	6	16	5	2	12
Initial Q (Qb), veh	0	0	0	0	0	0	0	0	0	0	0	0
Ped-Bike Adj(A_pbT)	1.00		1.00	1.00		1.00	1.00		1.00	1.00		1.00
Parking Bus, Adj	1.00	1.00	1.00	1.00	1.00	1.00	1.00	1.00	1.00	1.00	1.00	1.00
Adj Sat Flow, veh/h/ln	1845	1845	1845	1881	1881	1900	1863	1863	1863	1845	1845	1845
Adj Flow Rate, veh/h	129	247	159	102	382	210	387	511	43	188	532	105
Adj No. of Lanes	1	1	1	1	2	0	2	2	1	1	2	1
Peak Hour Factor	0.93	0.93	0.93	0.93	0.93	0.93	0.93	0.93	0.93	0.93	0.93	0.93
Percent Heavy Veh, %	3	3	3	1	1	1	2	2	2	3	3	3
Cap, veh/h	269	419	356	316	486	264	477	1068	478	226	1023	457
Arrive On Green	0.08	0.23	0.23	0.07	0.22	0.22	0.14	0.30	0.30	0.13	0.29	0.29
Sat Flow, veh/h	1757	1845	1568	1792	2240	1214	3442	3539	1583	1757	3505	1568
Grp Volume(v), veh/h	129	247	159	102	304	288	387	511	43	188	532	105
Grp Sat Flow(s),veh/h/ln	1757	1845	1568	1792	1787	1667	1721	1770	1583	1757	1752	1568
Q Serve(g_s), s	4.5	9.6	7.0	3.5	12.8	13.1	8.7	9.4	1.6	8.3	10.1	4.1
Cycle Q Clear(g_c), s	4.5	9.6	7.0	3.5	12.8	13.1	8.7	9.4	1.6	8.3	10.1	4.1
Prop In Lane	1.00		1.00	1.00		0.73	1.00		1.00	1.00		1.00
Lane Grp Cap(c), veh/h	269	419	356	316	388	362	477	1068	478	226	1023	457
V/C Ratio(X)	0.48	0.59	0.45	0.32	0.78	0.80	0.81	0.48	0.09	0.83	0.52	0.23
Avail Cap(c_a), veh/h	573	692	588	644	671	626	861	1771	792	440	1754	785
HCM Platoon Ratio	1.00	1.00	1.00	1.00	1.00	1.00	1.00	1.00	1.00	1.00	1.00	1.00
Upstream Filter(I)	1.00	1.00	1.00	1.00	1.00	1.00	1.00	1.00	1.00	1.00	1.00	1.00
Uniform Delay (d), s/veh	22.8	27.6	26.6	22.2	29.5	29.6	33.4	22.8	20.0	34.0	23.6	21.5
Incr Delay (d2), s/veh	0.5	0.5	0.3	0.2	1.3	1.5	1.3	0.5	0.1	3.0	0.5	0.3
Initial Q Delay(d3),s/veh	0.0	0.0	0.0	0.0	0.0	0.0	0.0	0.0	0.0	0.0	0.0	0.0
%ile BackOfQ(50%),veh/ln	2.2	4.9	3.0	1.7	6.5	6.2	4.2	4.7	0.7	4.2	4.9	1.8
LnGrp Delay(d),s/veh	23.2	28.1	26.9	22.5	30.8	31.2	34.7	23.3	20.2	37.0	24.1	21.8
LnGrp LOS	C	C	C	C	C	C	C	C	C	D	C	C
Approach Vol, veh/h		535			694			941			825	
Approach Delay, s/veh		26.6			29.7			27.8			26.8	
Approach LOS		C			C			C			C	

Timer	1	2	3	4	5	6	7	8
Assigned Phs	1	2	3	4	5	6	7	8
Phs Duration (G+Y+Rc), s	15.6	29.7	9.9	24.7	14.8	30.5	10.7	24.0
Change Period (Y+Rc), s	4.5	6.4	4.5	6.6	4.5	6.4	4.5	6.6
Max Green Setting (Gmax), s	20.0	40.0	20.0	30.0	20.0	40.0	20.0	30.0
Max Q Clear Time (g_c+I1), s	10.7	12.1	5.5	11.6	10.3	11.4	6.5	15.1
Green Ext Time (p_c), s	0.4	11.2	0.1	2.4	0.1	11.3	0.1	2.3

Intersection Summary	
HCM 2010 Ctrl Delay	27.8
HCM 2010 LOS	C

Notes

User approved pedestrian interval to be less than phase max green.

Lane Group	EBL	EBT	EBR	WBL	WBT	WBR	NBL	NBT	NBR	SBL	SBT	SBR
Lane Configurations												
Volume (vph)	5	540	5	15	860	35	35	1	85	20	1	1
Ideal Flow (vphpl)	1900	1900	1900	1900	1900	1900	1900	1900	1900	1900	1900	1900
Lane Width (ft)	12	12	12	12	12	12	12	12	12	12	12	12
Grade (%)		0%			0%			0%			0%	
Storage Length (ft)	200		0	100		0	0		100	0		0
Storage Lanes	1		0	1		0	0		1	0		0
Taper Length (ft)	100			100			100			100		
Right Turn on Red			No			No			No			No
Link Speed (mph)		40			40			25			25	
Link Distance (ft)		1050			2258			303			468	
Travel Time (s)		17.9			38.5			8.3			12.8	
Confl. Peds. (#/hr)												
Confl. Bikes (#/hr)												
Peak Hour Factor	0.91	0.91	0.91	0.91	0.91	0.91	0.91	0.91	0.91	0.91	0.91	0.91
Growth Factor	100%	100%	100%	100%	100%	100%	100%	100%	50%	100%	100%	100%
Heavy Vehicles (%)	3%	3%	3%	1%	1%	1%	1%	1%	1%	5%	5%	5%
Bus Blockages (#/hr)	0	0	0	0	0	0	0	0	0	0	0	0
Parking (#/hr)												
Mid-Block Traffic (%)		0%			0%			0%			0%	
Shared Lane Traffic (%)												
Lane Group Flow (vph)	5	598	0	16	983	0	0	39	47	0	24	0
Turn Type	Perm	NA		pm+pt	NA		Perm	NA	Perm	Perm	NA	
Protected Phases		6		5	2			8			4	
Permitted Phases	6			2			8		8	4		
Detector Phase	6	6		5	2		8	8	8	4	4	
Switch Phase												
Minimum Initial (s)	15.0	15.0		6.0	7.0		6.0	6.0	6.0	6.0	6.0	
Minimum Split (s)	25.7	25.7		11.7	25.7		24.0	24.0	24.0	24.0	24.0	
Total Split (s)	65.7	65.7		30.7	65.7		34.0	34.0	34.0	34.0	34.0	
Total Split (%)	50.4%	50.4%		23.5%	50.4%		26.1%	26.1%	26.1%	26.1%	26.1%	
Maximum Green (s)	60.0	60.0		25.0	60.0		30.0	30.0	30.0	30.0	30.0	
Yellow Time (s)	4.5	4.5		4.5	4.5		3.0	3.0	3.0	3.0	3.0	
All-Red Time (s)	1.2	1.2		1.2	1.2		1.0	1.0	1.0	1.0	1.0	
Lost Time Adjust (s)	0.0	0.0		0.0	0.0			0.0	0.0		0.0	
Total Lost Time (s)	5.7	5.7		5.7	5.7			4.0	4.0		4.0	
Lead/Lag	Lag	Lag		Lead								
Lead-Lag Optimize?												
Vehicle Extension (s)	5.5	5.5		4.5	5.5		3.0	3.0	3.0	3.0	3.0	
Minimum Gap (s)	2.0	2.0		0.2	2.0		1.5	1.5	1.5	1.5	1.5	
Time Before Reduce (s)	0.0	0.0		0.0	0.0		0.0	0.0	0.0	0.0	0.0	
Time To Reduce (s)	0.0	0.0		0.0	0.0		0.0	0.0	0.0	0.0	0.0	
Recall Mode	Min	Min		None	Min		None	None	None	None	None	
Walk Time (s)	6.0	6.0			6.0		6.0	6.0	6.0	6.0	6.0	
Flash Dont Walk (s)	14.0	14.0			14.0		14.0	14.0	14.0	14.0	14.0	
Pedestrian Calls (#/hr)	0	0			0		0	0	0	0	0	
v/c Ratio	0.01	0.43		0.03	0.67			0.22	0.23		0.14	
Control Delay	5.4	6.8		2.7	7.8			31.4	30.8		30.0	
Queue Delay	0.0	0.0		0.0	0.0			0.0	0.0		0.0	

Lane Group	EBL	EBT	EBR	WBL	WBT	WBR	NBL	NBT	NBR	SBL	SBT	SBR
Total Delay	5.4	6.8		2.7	7.8			31.4	30.8		30.0	
Queue Length 50th (ft)	0	70		1	164			12	15		7	
Queue Length 95th (ft)	6	262		6	332			46	52		33	
Internal Link Dist (ft)		970			2178			223			388	
Turn Bay Length (ft)	200			100					100			
Base Capacity (vph)	437	1675		969	1870			683	813		654	
Starvation Cap Reductn	0	0		0	0			0	0		0	
Spillback Cap Reductn	0	0		0	0			0	0		0	
Storage Cap Reductn	0	0		0	0			0	0		0	
Reduced v/c Ratio	0.01	0.36		0.02	0.53			0.06	0.06		0.04	

Intersection Summary

Area Type: Other
Cycle Length: 130.4
Actuated Cycle Length: 62.3
Natural Cycle: 75
Control Type: Actuated-Uncoordinated
Description: Runs Free. Ped PB. No Xwalks.

Splits and Phases: 300: HS Dwy/Fairwinds Boulevard & CTH N

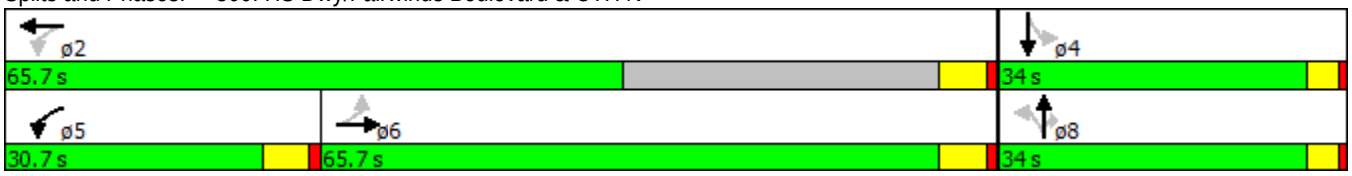

Movement	EBL	EBT	EBR	WBL	WBT	WBR	NBL	NBT	NBR	SBL	SBT	SBR
Lane Configurations												
Volume (veh/h)	5	540	5	15	860	35	35	1	85	20	1	1
Number	1	6	16	5	2	12	3	8	18	7	4	14
Initial Q (Qb), veh	0	0	0	0	0	0	0	0	0	0	0	0
Ped-Bike Adj(A_pbT)	1.00		1.00	1.00		1.00	1.00		1.00	1.00		1.00
Parking Bus, Adj	1.00	1.00	1.00	1.00	1.00	1.00	1.00	1.00	1.00	1.00	1.00	1.00
Adj Sat Flow, veh/h/ln	1845	1845	1900	1881	1881	1900	1900	1881	1881	1900	1810	1900
Adj Flow Rate, veh/h	5	593	5	16	945	38	38	1	47	22	1	1
Adj No. of Lanes	1	1	0	1	1	0	0	1	1	0	1	0
Peak Hour Factor	0.91	0.91	0.91	0.91	0.91	0.91	0.91	0.91	0.91	0.91	0.91	0.91
Percent Heavy Veh, %	3	3	3	1	1	1	1	1	1	5	5	5
Cap, veh/h	414	1251	11	582	1415	57	216	4	120	164	7	3
Arrive On Green	0.68	0.68	0.68	0.02	0.79	0.79	0.07	0.07	0.07	0.07	0.07	0.07
Sat Flow, veh/h	565	1827	15	1792	1796	72	1539	59	1599	890	99	43
Grp Volume(v), veh/h	5	0	598	16	0	983	39	0	47	24	0	0
Grp Sat Flow(s),veh/h/ln	565	0	1842	1792	0	1868	1598	0	1599	1032	0	0
Q Serve(g_s), s	0.3	0.0	10.7	0.2	0.0	16.7	0.0	0.0	2.0	1.0	0.0	0.0
Cycle Q Clear(g_c), s	9.6	0.0	10.7	0.2	0.0	16.7	1.5	0.0	2.0	2.4	0.0	0.0
Prop In Lane	1.00		0.01	1.00		0.04	0.97		1.00	0.92		0.04
Lane Grp Cap(c), veh/h	414	0	1261	582	0	1472	220	0	120	175	0	0
V/C Ratio(X)	0.01	0.00	0.47	0.03	0.00	0.67	0.18	0.00	0.39	0.14	0.00	0.00
Avail Cap(c_a), veh/h	506	0	1561	1174	0	1583	720	0	677	641	0	0
HCM Platoon Ratio	1.00	1.00	1.00	1.00	1.00	1.00	1.00	1.00	1.00	1.00	1.00	1.00
Upstream Filter(I)	1.00	0.00	1.00	1.00	0.00	1.00	1.00	0.00	1.00	1.00	0.00	0.00
Uniform Delay (d), s/veh	7.1	0.0	5.2	3.7	0.0	3.4	31.0	0.0	31.2	31.8	0.0	0.0
Incr Delay (d2), s/veh	0.0	0.0	0.8	0.0	0.0	1.7	0.4	0.0	2.1	0.4	0.0	0.0
Initial Q Delay(d3),s/veh	0.0	0.0	0.0	0.0	0.0	0.0	0.0	0.0	0.0	0.0	0.0	0.0
%ile BackOfQ(50%),veh/ln	0.0	0.0	5.6	0.1	0.0	8.9	0.7	0.0	0.9	0.5	0.0	0.0
LnGrp Delay(d),s/veh	7.2	0.0	6.0	3.7	0.0	5.0	31.3	0.0	33.3	32.1	0.0	0.0
LnGrp LOS	A		A	A		A	C		C	C		
Approach Vol, veh/h		603			999			86			24	
Approach Delay, s/veh		6.0			5.0			32.4			32.1	
Approach LOS		A			A			C			C	

Timer	1	2	3	4	5	6	7	8
Assigned Phs		2		4	5	6		8
Phs Duration (G+Y+Rc), s		61.5		9.3	7.3	54.2		9.3
Change Period (Y+Rc), s		* 5.7		4.0	* 5.7	* 5.7		4.0
Max Green Setting (Gmax), s		* 60		30.0	* 25	* 60		30.0
Max Q Clear Time (g_c+I1), s		18.7		4.4	2.2	12.7		4.0
Green Ext Time (p_c), s		32.2		0.5	0.0	35.8		0.5

Intersection Summary	
HCM 2010 Ctrl Delay	7.1
HCM 2010 LOS	A

Notes

* HCM 2010 computational engine requires equal clearance times for the phases crossing the barrier.

APPENDIX C

EXISTING TRANSPORTATION SYSTEM WITH BUILD TRAFFIC OPERATIONAL ANALYSIS

C2. Horizon Year 2026 Build Traffic

Lane Group	WBL	WBR	NBT	NBR	SBL	SBT
Lane Configurations						
Volume (vph)	165	95	645	175	95	545
Ideal Flow (vphpl)	1900	1900	1900	1900	1900	1900
Lane Width (ft)	12	12	12	12	12	12
Grade (%)	0%		0%			0%
Storage Length (ft)	0	0		225	390	
Storage Lanes	1	1		1	1	
Taper Length (ft)	100				100	
Link Speed (mph)	25		35			35
Link Distance (ft)	580		2325			691
Travel Time (s)	15.8		45.3			13.5
Confl. Peds. (#/hr)						
Confl. Bikes (#/hr)						
Peak Hour Factor	0.88	0.88	0.88	0.88	0.88	0.88
Growth Factor	100%	100%	100%	100%	100%	100%
Heavy Vehicles (%)	25%	25%	5%	5%	7%	7%
Bus Blockages (#/hr)	0	0	0	0	0	0
Parking (#/hr)						
Mid-Block Traffic (%)	0%		0%			0%
Shared Lane Traffic (%)						
Lane Group Flow (vph)	188	108	733	199	108	619
Sign Control	Stop		Free			Free

Intersection Summary	
Area Type:	Other
Control Type: Unsignalized	

Intersection	
Int Delay, s/veh	4.8

Movement	WBL	WBR	NBT	NBR	SBL	SBT
Vol, veh/h	165	95	645	175	95	545
Conflicting Peds, #/hr	0	0	0	0	0	0
Sign Control	Stop	Stop	Free	Free	Free	Free
RT Channelized	-	None	-	None	-	None
Storage Length	0	0	-	225	390	-
Veh in Median Storage, #	2	-	0	-	-	0
Grade, %	0	-	0	-	-	0
Peak Hour Factor	88	88	88	88	88	88
Heavy Vehicles, %	25	25	5	5	7	7
Mvmt Flow	188	108	733	199	108	619

Major/Minor	Minor1		Major1		Major2	
Conflicting Flow All	1259	366	0	0	733	0
Stage 1	733	-	-	-	-	-
Stage 2	526	-	-	-	-	-
Critical Hdwy	7.3	7.4	-	-	4.24	-
Critical Hdwy Stg 1	6.3	-	-	-	-	-
Critical Hdwy Stg 2	6.3	-	-	-	-	-
Follow-up Hdwy	3.75	3.55	-	-	2.27	-
Pot Cap-1 Maneuver	~ 134	569	-	-	835	-
Stage 1	381	-	-	-	-	-
Stage 2	497	-	-	-	-	-
Platoon blocked, %			-	-		-
Mov Cap-1 Maneuver	~ 117	569	-	-	835	-
Mov Cap-2 Maneuver	293	-	-	-	-	-
Stage 1	381	-	-	-	-	-
Stage 2	433	-	-	-	-	-

Approach	WB	NB	SB
HCM Control Delay, s	28	0	1.5
HCM LOS	D		

Minor Lane/Major Mvmt	NBT	NBR	WBLn1	WBLn2	SBL	SBT
Capacity (veh/h)	-	-	293	569	835	-
HCM Lane V/C Ratio	-	-	0.64	0.19	0.129	-
HCM Control Delay (s)	-	-	36.8	12.8	10	-
HCM Lane LOS	-	-	E	B	A	-
HCM 95th %tile Q(veh)	-	-	4.1	0.7	0.4	-

Notes

~: Volume exceeds capacity $: Delay exceeds 300s +: Computation Not Defined *: All major volume in platoon

Lane Group	EBL	EBT	EBR	WBL	WBT	WBR	NBL	NBT	NBR	SBL	SBT	SBR
Lane Configurations												
Volume (vph)	205	415	375	35	380	175	300	440	75	205	435	70
Ideal Flow (vphpl)	1900	1900	1900	1900	1900	1900	1900	1900	1900	1900	1900	1900
Lane Width (ft)	12	12	12	12	12	12	12	12	12	12	12	12
Grade (%)		0%			0%			0%			0%	
Storage Length (ft)	210		430	215		0	260		55	240		90
Storage Lanes	1		1	1		0	2		1	1		1
Taper Length (ft)	100			100			100			100		
Right Turn on Red			No			No			No			No
Link Speed (mph)		40			40			35			35	
Link Distance (ft)		2258			1339			1052			2325	
Travel Time (s)		38.5			22.8			20.5			45.3	
Confl. Peds. (#/hr)												
Confl. Bikes (#/hr)												
Peak Hour Factor	0.81	0.81	0.81	0.81	0.81	0.81	0.81	0.81	0.81	0.81	0.81	0.81
Growth Factor	100%	100%	50%	100%	100%	100%	100%	100%	50%	100%	100%	50%
Heavy Vehicles (%)	5%	5%	5%	5%	5%	5%	10%	10%	10%	7%	7%	7%
Bus Blockages (#/hr)	0	0	0	0	0	0	0	0	0	0	0	0
Parking (#/hr)												
Mid-Block Traffic (%)		0%			0%			0%			0%	
Shared Lane Traffic (%)												
Lane Group Flow (vph)	253	512	231	43	685	0	370	543	46	253	537	43
Turn Type	pm+pt	NA	Perm	pm+pt	NA		Prot	NA	Perm	Prot	NA	Perm
Protected Phases	7	4		3	8		1	6		5	2	
Permitted Phases	4		4	8					6			2
Detector Phase	7	4	4	3	8		1	6	6	5	2	2
Switch Phase												
Minimum Initial (s)	6.0	8.0	8.0	6.0	8.0		8.0	15.0	15.0	6.0	15.0	15.0
Minimum Split (s)	10.5	48.6	48.6	10.5	50.6		12.5	45.4	45.4	10.5	50.4	50.4
Total Split (s)	24.5	36.6	36.6	24.5	36.6		24.5	46.4	46.4	24.5	46.4	46.4
Total Split (%)	18.6%	27.7%	27.7%	18.6%	27.7%		18.6%	35.2%	35.2%	18.6%	35.2%	35.2%
Maximum Green (s)	20.0	30.0	30.0	20.0	30.0		20.0	40.0	40.0	20.0	40.0	40.0
Yellow Time (s)	3.5	4.0	4.0	3.5	4.0		3.5	3.9	3.9	3.5	3.9	3.9
All-Red Time (s)	1.0	2.6	2.6	1.0	2.6		1.0	2.5	2.5	1.0	2.5	2.5
Lost Time Adjust (s)	0.0	0.0	0.0	0.0	0.0		0.0	0.0	0.0	0.0	0.0	0.0
Total Lost Time (s)	4.5	6.6	6.6	4.5	6.6		4.5	6.4	6.4	4.5	6.4	6.4
Lead/Lag	Lead	Lag	Lag	Lead	Lag		Lead	Lag	Lag	Lead	Lag	Lag
Lead-Lag Optimize?												
Vehicle Extension (s)	1.5	1.5	1.5	1.5	1.5		1.5	4.3	4.3	1.5	3.4	3.4
Minimum Gap (s)	1.5	1.5	1.5	1.5	1.5		1.5	2.0	2.0	1.5	2.0	2.0
Time Before Reduce (s)	20.0	30.0	30.0	20.0	30.0		20.0	19.0	19.0	20.0	20.0	20.0
Time To Reduce (s)	0.0	0.0	0.0	0.0	0.0		0.0	21.0	21.0	0.0	20.0	20.0
Recall Mode	None	None	None	None	None		None	Min	Min	None	Min	Min
Walk Time (s)		7.0	7.0		7.0			7.0	7.0		7.0	7.0
Flash Dont Walk (s)		35.0	35.0		37.0			32.0	32.0		37.0	37.0
Pedestrian Calls (#/hr)		0	0		0			0	0		0	0
v/c Ratio	0.74	0.80	0.42	0.18	0.87		0.78	0.72	0.14	0.82	0.61	0.11
Control Delay	35.9	44.6	31.9	21.3	53.8		59.1	46.3	36.6	68.2	40.8	35.3
Queue Delay	0.0	0.0	0.0	0.0	0.0		0.0	0.0	0.0	0.0	0.0	0.0

Lane Group	EBL	EBT	EBR	WBL	WBT	WBR	NBL	NBT	NBR	SBL	SBT	SBR
Total Delay	35.9	44.6	31.9	21.3	53.8		59.1	46.3	36.6	68.2	40.8	35.3
Queue Length 50th (ft)	113	333	127	17	248		136	197	27	183	187	25
Queue Length 95th (ft)	177	452	196	38	313		179	233	55	#309	229	52
Internal Link Dist (ft)		2178			1259			972			2245	
Turn Bay Length (ft)	210		430	215			260		55	240		90
Base Capacity (vph)	392	640	544	444	898		581	1199	536	308	1233	551
Starvation Cap Reductn	0	0	0	0	0		0	0	0	0	0	0
Spillback Cap Reductn	0	0	0	0	0		0	0	0	0	0	0
Storage Cap Reductn	0	0	0	0	0		0	0	0	0	0	0
Reduced v/c Ratio	0.65	0.80	0.42	0.10	0.76		0.64	0.45	0.09	0.82	0.44	0.08

Intersection Summary

Area Type: Other
Cycle Length: 132
Actuated Cycle Length: 111
Natural Cycle: 135
Control Type: Actuated-Uncoordinated
Description: Runs Free. PB all app. Ped interval reduced to max green for HCM output.
95th percentile volume exceeds capacity, queue may be longer.
Queue shown is maximum after two cycles.

Splits and Phases: 200: STH 83/Rochester Street & CTH N

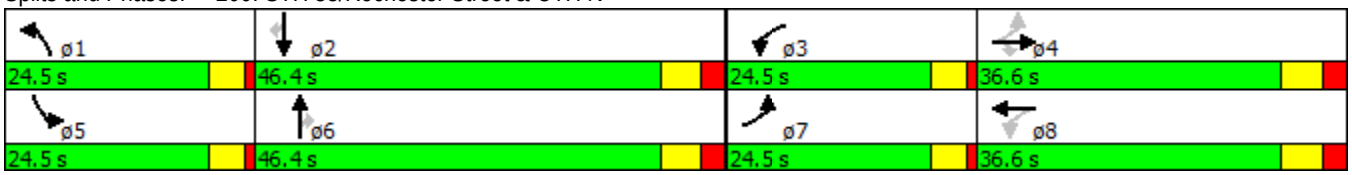

Movement	EBL	EBT	EBR	WBL	WBT	WBR	NBL	NBT	NBR	SBL	SBT	SBR
Lane Configurations												
Volume (veh/h)	205	415	375	35	380	175	300	440	75	205	435	70
Number	7	4	14	3	8	18	1	6	16	5	2	12
Initial Q (Qb), veh	0	0	0	0	0	0	0	0	0	0	0	0
Ped-Bike Adj(A_pbT)	1.00		1.00	1.00		1.00	1.00		1.00	1.00		1.00
Parking Bus, Adj	1.00	1.00	1.00	1.00	1.00	1.00	1.00	1.00	1.00	1.00	1.00	1.00
Adj Sat Flow, veh/h/ln	1810	1810	1810	1810	1810	1900	1727	1727	1727	1776	1776	1776
Adj Flow Rate, veh/h	253	512	231	43	469	216	370	543	46	253	537	43
Adj No. of Lanes	1	1	1	1	2	0	2	2	1	1	2	1
Peak Hour Factor	0.81	0.81	0.81	0.81	0.81	0.81	0.81	0.81	0.81	0.81	0.81	0.81
Percent Heavy Veh, %	5	5	5	5	5	5	10	10	10	7	7	7
Cap, veh/h	311	573	487	173	528	242	432	868	389	281	997	446
Arrive On Green	0.13	0.32	0.32	0.04	0.23	0.23	0.14	0.26	0.26	0.17	0.30	0.30
Sat Flow, veh/h	1723	1810	1538	1723	2294	1049	3191	3282	1468	1691	3374	1509
Grp Volume(v), veh/h	253	512	231	43	351	334	370	543	46	253	537	43
Grp Sat Flow(s),veh/h/ln	1723	1810	1538	1723	1719	1624	1596	1641	1468	1691	1687	1509
Q Serve(g_s), s	11.2	28.1	12.6	1.9	20.6	20.8	11.8	15.2	2.5	15.3	13.9	2.2
Cycle Q Clear(g_c), s	11.2	28.1	12.6	1.9	20.6	20.8	11.8	15.2	2.5	15.3	13.9	2.2
Prop In Lane	1.00		1.00	1.00		0.65	1.00		1.00	1.00		1.00
Lane Grp Cap(c), veh/h	311	573	487	173	396	374	432	868	389	281	997	446
V/C Ratio(X)	0.81	0.89	0.47	0.25	0.89	0.89	0.86	0.63	0.12	0.90	0.54	0.10
Avail Cap(c_a), veh/h	422	573	487	433	495	468	613	1260	564	325	1295	579
HCM Platoon Ratio	1.00	1.00	1.00	1.00	1.00	1.00	1.00	1.00	1.00	1.00	1.00	1.00
Upstream Filter(I)	1.00	1.00	1.00	1.00	1.00	1.00	1.00	1.00	1.00	1.00	1.00	1.00
Uniform Delay (d), s/veh	26.8	33.9	28.6	30.2	38.8	38.9	44.1	33.8	29.1	42.6	30.7	26.6
Incr Delay (d2), s/veh	6.1	15.8	0.3	0.3	13.0	14.7	6.2	1.2	0.2	22.6	0.5	0.1
Initial Q Delay(d3),s/veh	0.0	0.0	0.0	0.0	0.0	0.0	0.0	0.0	0.0	0.0	0.0	0.0
%ile BackOfQ(50%),veh/ln	5.7	16.5	5.4	0.9	11.2	10.8	5.6	7.0	1.0	8.9	6.6	0.9
LnGrp Delay(d),s/veh	32.9	49.8	28.9	30.5	51.8	53.6	50.2	34.9	29.3	65.2	31.3	26.7
LnGrp LOS	C	D	C	C	D	D	D	C	C	E	C	C
Approach Vol, veh/h		996			728			959			833	
Approach Delay, s/veh		40.6			51.4			40.6			41.3	
Approach LOS		D			D			D			D	

Timer	1	2	3	4	5	6	7	8
Assigned Phs	1	2	3	4	5	6	7	8
Phs Duration (G+Y+Rc), s	18.6	37.2	8.8	39.6	21.8	34.0	17.8	30.6
Change Period (Y+Rc), s	4.5	6.4	4.5	6.6	4.5	6.4	4.5	6.6
Max Green Setting (Gmax), s	20.0	40.0	20.0	30.0	20.0	40.0	20.0	30.0
Max Q Clear Time (g_c+I1), s	13.8	15.9	3.9	30.1	17.3	17.2	13.2	22.8
Green Ext Time (p_c), s	0.3	10.7	0.0	0.0	0.1	10.4	0.1	1.2

Intersection Summary	
HCM 2010 Ctrl Delay	43.0
HCM 2010 LOS	D

Notes

User approved pedestrian interval to be less than phase max green.

Lane Group	EBL	EBT	EBR	WBL	WBT	WBR	NBL	NBT	NBR	SBL	SBT	SBR
Lane Configurations												
Volume (vph)	1	680	35	90	650	10	65	1	275	40	1	1
Ideal Flow (vphpl)	1900	1900	1900	1900	1900	1900	1900	1900	1900	1900	1900	1900
Lane Width (ft)	12	12	12	12	12	12	12	12	12	12	12	12
Grade (%)		0%			0%			0%			0%	
Storage Length (ft)	200		0	100		0	0		100	0		0
Storage Lanes	1		0	1		0	0		1	0		0
Taper Length (ft)	100			100			100			100		
Right Turn on Red			No			No			No			No
Link Speed (mph)		40			40			25			25	
Link Distance (ft)		1050			2258			303			468	
Travel Time (s)		17.9			38.5			8.3			12.8	
Confl. Peds. (#/hr)												
Confl. Bikes (#/hr)												
Peak Hour Factor	0.72	0.72	0.72	0.72	0.72	0.72	0.72	0.72	0.72	0.72	0.72	0.72
Growth Factor	100%	100%	100%	100%	100%	100%	100%	100%	50%	100%	100%	100%
Heavy Vehicles (%)	2%	2%	2%	5%	5%	5%	12%	12%	12%	2%	2%	2%
Bus Blockages (#/hr)	0	0	0	0	0	0	0	0	0	0	0	0
Parking (#/hr)												
Mid-Block Traffic (%)		0%			0%			0%			0%	
Shared Lane Traffic (%)												
Lane Group Flow (vph)	1	993	0	125	917	0	0	91	191	0	58	0
Turn Type	Perm	NA		pm+pt	NA		Perm	NA	Perm	Perm	NA	
Protected Phases		6		5	2			8			4	
Permitted Phases	6			2			8		8	4		
Detector Phase	6	6		5	2		8	8	8	4	4	
Switch Phase												
Minimum Initial (s)	15.0	15.0		6.0	7.0		6.0	6.0	6.0	6.0	6.0	
Minimum Split (s)	25.7	25.7		11.7	25.7		24.0	24.0	24.0	24.0	24.0	
Total Split (s)	65.7	65.7		30.7	65.7		34.0	34.0	34.0	34.0	34.0	
Total Split (%)	50.4%	50.4%		23.5%	50.4%		26.1%	26.1%	26.1%	26.1%	26.1%	
Maximum Green (s)	60.0	60.0		25.0	60.0		30.0	30.0	30.0	30.0	30.0	
Yellow Time (s)	4.5	4.5		4.5	4.5		3.0	3.0	3.0	3.0	3.0	
All-Red Time (s)	1.2	1.2		1.2	1.2		1.0	1.0	1.0	1.0	1.0	
Lost Time Adjust (s)	0.0	0.0		0.0	0.0			0.0	0.0		0.0	
Total Lost Time (s)	5.7	5.7		5.7	5.7			4.0	4.0		4.0	
Lead/Lag	Lag	Lag		Lead								
Lead-Lag Optimize?												
Vehicle Extension (s)	5.5	5.5		4.5	5.5		3.0	3.0	3.0	3.0	3.0	
Minimum Gap (s)	2.0	2.0		0.2	2.0		1.5	1.5	1.5	1.5	1.5	
Time Before Reduce (s)	0.0	0.0		0.0	0.0		0.0	0.0	0.0	0.0	0.0	
Time To Reduce (s)	0.0	0.0		0.0	0.0		0.0	0.0	0.0	0.0	0.0	
Recall Mode	Min	Min		None	Min		None	None	None	None	None	
Walk Time (s)	6.0	6.0			6.0		6.0	6.0	6.0	6.0	6.0	
Flash Dont Walk (s)	14.0	14.0			14.0		14.0	14.0	14.0	14.0	14.0	
Pedestrian Calls (#/hr)	0	0			0		0	0	0	0	0	
v/c Ratio	0.00	0.96		0.47	0.70			0.42	0.74		0.25	
Control Delay	14.0	44.3		21.9	12.7			45.2	59.3		40.6	
Queue Delay	0.0	0.0		0.0	0.0			0.0	0.0		0.0	

Lane Group	EBL	EBT	EBR	WBL	WBT	WBR	NBL	NBT	NBR	SBL	SBT	SBR
Total Delay	14.0	44.3		21.9	12.7			45.2	59.3		40.6	
Queue Length 50th (ft)	0	599		29	295			56	124		34	
Queue Length 95th (ft)	3	#736		68	375			86	162		59	
Internal Link Dist (ft)		970			2178			223			388	
Turn Bay Length (ft)	200			100					100			
Base Capacity (vph)	304	1037		455	1531			342	404		365	
Starvation Cap Reductn	0	0		0	0			0	0		0	
Spillback Cap Reductn	0	0		0	0			0	0		0	
Storage Cap Reductn	0	0		0	0			0	0		0	
Reduced v/c Ratio	0.00	0.96		0.27	0.60			0.27	0.47		0.16	

Intersection Summary

Area Type: Other
Cycle Length: 130.4
Actuated Cycle Length: 107.7
Natural Cycle: 90
Control Type: Actuated-Uncoordinated
Description: Runs Free. Ped PB. No Xwalks.
95th percentile volume exceeds capacity, queue may be longer.
Queue shown is maximum after two cycles.

Splits and Phases: 300: HS Dwy/Fairwinds Boulevard & CTH N

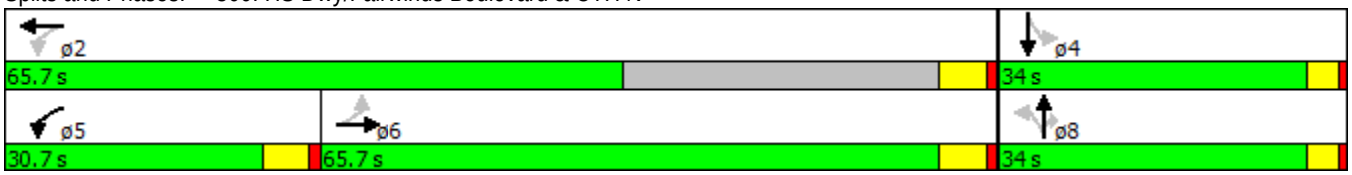

Movement	EBL	EBT	EBR	WBL	WBT	WBR	NBL	NBT	NBR	SBL	SBT	SBR
Lane Configurations												
Volume (veh/h)	1	680	35	90	650	10	65	1	275	40	1	1
Number	1	6	16	5	2	12	3	8	18	7	4	14
Initial Q (Qb), veh	0	0	0	0	0	0	0	0	0	0	0	0
Ped-Bike Adj(A_pbT)	1.00		1.00	1.00		1.00	1.00		1.00	1.00		1.00
Parking Bus, Adj	1.00	1.00	1.00	1.00	1.00	1.00	1.00	1.00	1.00	1.00	1.00	1.00
Adj Sat Flow, veh/h/ln	1863	1863	1900	1810	1810	1900	1900	1696	1696	1900	1863	1900
Adj Flow Rate, veh/h	1	944	49	125	903	14	90	1	191	56	1	1
Adj No. of Lanes	1	1	0	1	1	0	0	1	1	0	1	0
Peak Hour Factor	0.72	0.72	0.72	0.72	0.72	0.72	0.72	0.72	0.72	0.72	0.72	0.72
Percent Heavy Veh, %	2	2	2	5	5	5	12	12	12	2	2	2
Cap, veh/h	350	1054	55	264	1292	20	320	3	238	212	4	2
Arrive On Green	0.60	0.60	0.60	0.06	0.73	0.73	0.17	0.17	0.17	0.17	0.17	0.17
Sat Flow, veh/h	607	1756	91	1723	1777	28	1455	19	1442	809	23	15
Grp Volume(v), veh/h	1	0	993	125	0	917	91	0	191	58	0	0
Grp Sat Flow(s),veh/h/ln	607	0	1847	1723	0	1805	1473	0	1442	847	0	0
Q Serve(g_s), s	0.1	0.0	41.9	2.2	0.0	25.4	0.0	0.0	11.5	3.9	0.0	0.0
Cycle Q Clear(g_c), s	14.1	0.0	41.9	2.2	0.0	25.4	4.5	0.0	11.5	8.4	0.0	0.0
Prop In Lane	1.00		0.05	1.00		0.02	0.99		1.00	0.97		0.02
Lane Grp Cap(c), veh/h	350	0	1109	264	0	1312	323	0	238	218	0	0
V/C Ratio(X)	0.00	0.00	0.90	0.47	0.00	0.70	0.28	0.00	0.80	0.27	0.00	0.00
Avail Cap(c_a), veh/h	389	0	1228	632	0	1312	538	0	480	419	0	0
HCM Platoon Ratio	1.00	1.00	1.00	1.00	1.00	1.00	1.00	1.00	1.00	1.00	1.00	1.00
Upstream Filter(I)	1.00	0.00	1.00	1.00	0.00	1.00	1.00	0.00	1.00	1.00	0.00	0.00
Uniform Delay (d), s/veh	13.9	0.0	15.6	18.6	0.0	6.8	33.3	0.0	36.2	36.9	0.0	0.0
Incr Delay (d2), s/veh	0.0	0.0	9.8	2.3	0.0	2.4	0.5	0.0	6.2	0.6	0.0	0.0
Initial Q Delay(d3),s/veh	0.0	0.0	0.0	0.0	0.0	0.0	0.0	0.0	0.0	0.0	0.0	0.0
%ile BackOfQ(50%),veh/ln	0.0	0.0	24.0	2.1	0.0	13.3	2.0	0.0	5.0	1.4	0.0	0.0
LnGrp Delay(d),s/veh	13.9	0.0	25.3	20.9	0.0	9.2	33.8	0.0	42.4	37.5	0.0	0.0
LnGrp LOS	B		C	C		A	C		D	D		
Approach Vol, veh/h		994			1042			282			58	
Approach Delay, s/veh		25.3			10.6			39.6			37.5	
Approach LOS		C			B			D			D	

Timer	1	2	3	4	5	6	7	8
Assigned Phs		2		4	5	6		8
Phs Duration (G+Y+Rc), s		71.3		18.9	11.4	59.9		18.9
Change Period (Y+Rc), s		* 5.7		4.0	* 5.7	* 5.7		4.0
Max Green Setting (Gmax), s		* 60		30.0	* 25	* 60		30.0
Max Q Clear Time (g_c+I1), s		27.4		10.4	4.2	43.9		13.5
Green Ext Time (p_c), s		29.6		1.5	0.6	10.2		1.4

Intersection Summary	
HCM 2010 Ctrl Delay	20.9
HCM 2010 LOS	C

Notes

* HCM 2010 computational engine requires equal clearance times for the phases crossing the barrier.

Lane Group	WBL	WBR	NBT	NBR	SBL	SBT
Lane Configurations						
Volume (vph)	180	85	695	145	95	745
Ideal Flow (vphpl)	1900	1900	1900	1900	1900	1900
Lane Width (ft)	12	12	12	12	12	12
Grade (%)	0%		0%			0%
Storage Length (ft)	0	0		225	390	
Storage Lanes	1	1		1	1	
Taper Length (ft)	100				100	
Link Speed (mph)	25		35			35
Link Distance (ft)	580		2325			691
Travel Time (s)	15.8		45.3			13.5
Confl. Peds. (#/hr)						
Confl. Bikes (#/hr)						
Peak Hour Factor	0.92	0.92	0.92	0.92	0.92	0.92
Growth Factor	100%	100%	100%	100%	100%	100%
Heavy Vehicles (%)	2%	2%	3%	3%	4%	4%
Bus Blockages (#/hr)	0	0	0	0	0	0
Parking (#/hr)						
Mid-Block Traffic (%)	0%		0%			0%
Shared Lane Traffic (%)						
Lane Group Flow (vph)	196	92	755	158	103	810
Sign Control	Stop		Free			Free

Intersection Summary	
Area Type:	Other
Control Type: Unsignalized	

Intersection	
Int Delay, s/veh	4.1

Movement	WBL	WBR	NBT	NBR	SBL	SBT
Vol, veh/h	180	85	695	145	95	745
Conflicting Peds, #/hr	0	0	0	0	0	0
Sign Control	Stop	Stop	Free	Free	Free	Free
RT Channelized	-	None	-	None	-	None
Storage Length	0	0	-	225	390	-
Veh in Median Storage, #	2	-	0	-	-	0
Grade, %	0	-	0	-	-	0
Peak Hour Factor	92	92	92	92	92	92
Heavy Vehicles, %	2	2	3	3	4	4
Mvmt Flow	196	92	755	158	103	810

Major/Minor	Minor1		Major1		Major2	
Conflicting Flow All	1366	378	0	0	755	0
Stage 1	755	-	-	-	-	-
Stage 2	611	-	-	-	-	-
Critical Hdwy	6.84	6.94	-	-	4.18	-
Critical Hdwy Stg 1	5.84	-	-	-	-	-
Critical Hdwy Stg 2	5.84	-	-	-	-	-
Follow-up Hdwy	3.52	3.32	-	-	2.24	-
Pot Cap-1 Maneuver	~ 138	620	-	-	838	-
Stage 1	425	-	-	-	-	-
Stage 2	504	-	-	-	-	-
Platoon blocked, %			-	-		-
Mov Cap-1 Maneuver	~ 121	620	-	-	838	-
Mov Cap-2 Maneuver	312	-	-	-	-	-
Stage 1	425	-	-	-	-	-
Stage 2	442	-	-	-	-	-

Approach	WB	NB	SB
HCM Control Delay, s	26.9	0	1.1
HCM LOS	D		

Minor Lane/Major Mvmt	NBT	NBR	WBLn1	WBLn2	SBL	SBT
Capacity (veh/h)	-	-	312	620	838	-
HCM Lane V/C Ratio	-	-	0.627	0.149	0.123	-
HCM Control Delay (s)	-	-	34.1	11.8	9.9	-
HCM Lane LOS	-	-	D	B	A	-
HCM 95th %tile Q(veh)	-	-	4	0.5	0.4	-

Notes

~: Volume exceeds capacity $: Delay exceeds 300s +: Computation Not Defined *: All major volume in platoon

Lane Group	EBL	EBT	EBR	WBL	WBT	WBR	NBL	NBT	NBR	SBL	SBT	SBR
Lane Configurations												
Volume (vph)	130	255	310	100	385	210	380	500	80	190	520	215
Ideal Flow (vphpl)	1900	1900	1900	1900	1900	1900	1900	1900	1900	1900	1900	1900
Lane Width (ft)	12	12	12	12	12	12	12	12	12	12	12	12
Grade (%)		0%			0%			0%			0%	
Storage Length (ft)	210		430	215		0	260		55	240		90
Storage Lanes	1		1	1		0	2		1	1		1
Taper Length (ft)	100			100			100			100		
Right Turn on Red			No			No			No			No
Link Speed (mph)		40			40			35			35	
Link Distance (ft)		2258			1339			1052			2325	
Travel Time (s)		38.5			22.8			20.5			45.3	
Confl. Peds. (#/hr)												
Confl. Bikes (#/hr)												
Peak Hour Factor	0.93	0.93	0.93	0.93	0.93	0.93	0.93	0.93	0.93	0.93	0.93	0.93
Growth Factor	100%	100%	50%	100%	100%	100%	100%	100%	50%	100%	100%	50%
Heavy Vehicles (%)	3%	3%	3%	1%	1%	1%	2%	2%	2%	3%	3%	3%
Bus Blockages (#/hr)	0	0	0	0	0	0	0	0	0	0	0	0
Parking (#/hr)												
Mid-Block Traffic (%)		0%			0%			0%			0%	
Shared Lane Traffic (%)												
Lane Group Flow (vph)	140	274	167	108	640	0	409	538	43	204	559	116
Turn Type	pm+pt	NA	Perm	pm+pt	NA		Prot	NA	Perm	Prot	NA	Perm
Protected Phases	7	4		3	8		1	6		5	2	
Permitted Phases	4		4	8					6			2
Detector Phase	7	4	4	3	8		1	6	6	5	2	2
Switch Phase												
Minimum Initial (s)	6.0	8.0	8.0	6.0	8.0		8.0	15.0	15.0	6.0	15.0	15.0
Minimum Split (s)	10.5	48.6	48.6	10.5	50.6		12.5	45.4	45.4	10.5	50.4	50.4
Total Split (s)	24.5	36.6	36.6	24.5	36.6		24.5	46.4	46.4	24.5	46.4	46.4
Total Split (%)	18.6%	27.7%	27.7%	18.6%	27.7%		18.6%	35.2%	35.2%	18.6%	35.2%	35.2%
Maximum Green (s)	20.0	30.0	30.0	20.0	30.0		20.0	40.0	40.0	20.0	40.0	40.0
Yellow Time (s)	3.5	4.0	4.0	3.5	4.0		3.5	3.9	3.9	3.5	3.9	3.9
All-Red Time (s)	1.0	2.6	2.6	1.0	2.6		1.0	2.5	2.5	1.0	2.5	2.5
Lost Time Adjust (s)	0.0	0.0	0.0	0.0	0.0		0.0	0.0	0.0	0.0	0.0	0.0
Total Lost Time (s)	4.5	6.6	6.6	4.5	6.6		4.5	6.4	6.4	4.5	6.4	6.4
Lead/Lag	Lead	Lag	Lag	Lead	Lag		Lead	Lag	Lag	Lead	Lag	Lag
Lead-Lag Optimize?												
Vehicle Extension (s)	1.5	1.5	1.5	1.5	1.5		1.5	4.3	4.3	1.5	3.4	3.4
Minimum Gap (s)	1.5	1.5	1.5	1.5	1.5		1.5	2.0	2.0	1.5	2.0	2.0
Time Before Reduce (s)	20.0	30.0	30.0	20.0	30.0		20.0	19.0	19.0	20.0	20.0	20.0
Time To Reduce (s)	0.0	0.0	0.0	0.0	0.0		0.0	21.0	21.0	0.0	20.0	20.0
Recall Mode	None	None	None	None	None		None	Min	Min	None	Min	Min
Walk Time (s)		7.0	7.0		7.0			7.0	7.0		7.0	7.0
Flash Dont Walk (s)		35.0	35.0		37.0			32.0	32.0		37.0	37.0
Pedestrian Calls (#/hr)		0	0		0			0	0		0	0
v/c Ratio	0.47	0.57	0.41	0.27	0.79		0.72	0.62	0.11	0.71	0.66	0.30
Control Delay	23.7	36.4	33.6	20.4	42.7		46.4	36.4	31.6	53.4	37.2	33.9
Queue Delay	0.0	0.0	0.0	0.0	0.0		0.0	0.0	0.0	0.0	0.0	0.0

Lane Group	EBL	EBT	EBR	WBL	WBT	WBR	NBL	NBT	NBR	SBL	SBT	SBR
Total Delay	23.7	36.4	33.6	20.4	42.7		46.4	36.4	31.6	53.4	37.2	33.9
Queue Length 50th (ft)	52	141	82	39	190		120	151	20	116	157	57
Queue Length 95th (ft)	106	261	166	85	301		206	245	55	#231	255	123
Internal Link Dist (ft)		2178			1259			972			2245	
Turn Bay Length (ft)	210		430	215			260		55	240		90
Base Capacity (vph)	466	625	531	581	1128		763	1572	703	389	1557	696
Starvation Cap Reductn	0	0	0	0	0		0	0	0	0	0	0
Spillback Cap Reductn	0	0	0	0	0		0	0	0	0	0	0
Storage Cap Reductn	0	0	0	0	0		0	0	0	0	0	0
Reduced v/c Ratio	0.30	0.44	0.31	0.19	0.57		0.54	0.34	0.06	0.52	0.36	0.17

Intersection Summary

Area Type: Other
Cycle Length: 132
Actuated Cycle Length: 93.3
Natural Cycle: 125
Control Type: Actuated-Uncoordinated
Description: Runs Free. PB all app. Ped interval reduced to max green for HCM output.
95th percentile volume exceeds capacity, queue may be longer.
Queue shown is maximum after two cycles.

Splits and Phases: 200: STH 83/Rochester Street & CTH N

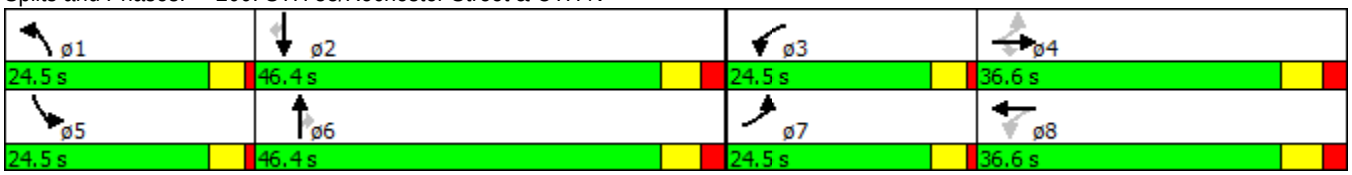

Movement	EBL	EBT	EBR	WBL	WBT	WBR	NBL	NBT	NBR	SBL	SBT	SBR
Lane Configurations												
Volume (veh/h)	130	255	310	100	385	210	380	500	80	190	520	215
Number	7	4	14	3	8	18	1	6	16	5	2	12
Initial Q (Qb), veh	0	0	0	0	0	0	0	0	0	0	0	0
Ped-Bike Adj(A_pbT)	1.00		1.00	1.00		1.00	1.00		1.00	1.00		1.00
Parking Bus, Adj	1.00	1.00	1.00	1.00	1.00	1.00	1.00	1.00	1.00	1.00	1.00	1.00
Adj Sat Flow, veh/h/ln	1845	1845	1845	1881	1881	1900	1863	1863	1863	1845	1845	1845
Adj Flow Rate, veh/h	140	274	167	108	414	226	409	538	43	204	559	116
Adj No. of Lanes	1	1	1	1	2	0	2	2	1	1	2	1
Peak Hour Factor	0.93	0.93	0.93	0.93	0.93	0.93	0.93	0.93	0.93	0.93	0.93	0.93
Percent Heavy Veh, %	3	3	3	1	1	1	2	2	2	3	3	3
Cap, veh/h	266	451	384	307	511	276	493	1057	473	240	1024	458
Arrive On Green	0.08	0.24	0.24	0.06	0.23	0.23	0.14	0.30	0.30	0.14	0.29	0.29
Sat Flow, veh/h	1757	1845	1568	1792	2243	1211	3442	3539	1583	1757	3505	1568
Grp Volume(v), veh/h	140	274	167	108	329	311	409	538	43	204	559	116
Grp Sat Flow(s),veh/h/ln	1757	1845	1568	1792	1787	1667	1721	1770	1583	1757	1752	1568
Q Serve(g_s), s	5.2	11.3	7.8	3.9	15.0	15.2	10.0	10.8	1.7	9.8	11.6	4.9
Cycle Q Clear(g_c), s	5.2	11.3	7.8	3.9	15.0	15.2	10.0	10.8	1.7	9.8	11.6	4.9
Prop In Lane	1.00		1.00	1.00		0.73	1.00		1.00	1.00		1.00
Lane Grp Cap(c), veh/h	266	451	384	307	408	380	493	1057	473	240	1024	458
V/C Ratio(X)	0.53	0.61	0.44	0.35	0.81	0.82	0.83	0.51	0.09	0.85	0.55	0.25
Avail Cap(c_a), veh/h	531	643	546	607	623	581	799	1644	736	408	1628	728
HCM Platoon Ratio	1.00	1.00	1.00	1.00	1.00	1.00	1.00	1.00	1.00	1.00	1.00	1.00
Upstream Filter(I)	1.00	1.00	1.00	1.00	1.00	1.00	1.00	1.00	1.00	1.00	1.00	1.00
Uniform Delay (d), s/veh	24.0	28.8	27.5	23.6	31.4	31.5	35.9	25.0	21.8	36.3	25.7	23.3
Incr Delay (d2), s/veh	0.6	0.5	0.3	0.3	2.4	3.0	1.8	0.6	0.1	3.2	0.5	0.3
Initial Q Delay(d3),s/veh	0.0	0.0	0.0	0.0	0.0	0.0	0.0	0.0	0.0	0.0	0.0	0.0
%ile BackOfQ(50%),veh/ln	2.5	5.8	3.4	1.9	7.7	7.3	4.8	5.4	0.8	5.0	5.7	2.1
LnGrp Delay(d),s/veh	24.6	29.3	27.8	23.8	33.8	34.5	37.6	25.6	21.9	39.5	26.2	23.6
LnGrp LOS	C	C	C	C	C	C	D	C	C	D	C	C
Approach Vol, veh/h		581			748			990			879	
Approach Delay, s/veh		27.7			32.7			30.4			28.9	
Approach LOS		C			C			C			C	

Timer	1	2	3	4	5	6	7	8
Assigned Phs	1	2	3	4	5	6	7	8
Phs Duration (G+Y+Rc), s	16.8	31.6	10.0	27.7	16.3	32.1	11.5	26.2
Change Period (Y+Rc), s	4.5	6.4	4.5	6.6	4.5	6.4	4.5	6.6
Max Green Setting (Gmax), s	20.0	40.0	20.0	30.0	20.0	40.0	20.0	30.0
Max Q Clear Time (g_c+I1), s	12.0	13.6	5.9	13.3	11.8	12.8	7.2	17.2
Green Ext Time (p_c), s	0.4	11.6	0.1	2.6	0.1	11.8	0.1	2.4

Intersection Summary	
HCM 2010 Ctrl Delay	30.0
HCM 2010 LOS	C

Notes

User approved pedestrian interval to be less than phase max green.

Lane Group	EBL	EBT	EBR	WBL	WBT	WBR	NBL	NBT	NBR	SBL	SBT	SBR
Lane Configurations												
Volume (vph)	10	585	10	15	930	35	35	1	90	20	1	1
Ideal Flow (vphpl)	1900	1900	1900	1900	1900	1900	1900	1900	1900	1900	1900	1900
Lane Width (ft)	12	12	12	12	12	12	12	12	12	12	12	12
Grade (%)		0%			0%			0%			0%	
Storage Length (ft)	200		0	100		0	0		100	0		0
Storage Lanes	1		0	1		0	0		1	0		0
Taper Length (ft)	100			100			100			100		
Right Turn on Red			No			No			No			No
Link Speed (mph)		40			40			25			25	
Link Distance (ft)		1050			2258			303			468	
Travel Time (s)		17.9			38.5			8.3			12.8	
Confl. Peds. (#/hr)												
Confl. Bikes (#/hr)												
Peak Hour Factor	0.91	0.91	0.91	0.91	0.91	0.91	0.91	0.91	0.91	0.91	0.91	0.91
Growth Factor	100%	100%	100%	100%	100%	100%	100%	100%	50%	100%	100%	100%
Heavy Vehicles (%)	3%	3%	3%	1%	1%	1%	1%	1%	1%	5%	5%	5%
Bus Blockages (#/hr)	0	0	0	0	0	0	0	0	0	0	0	0
Parking (#/hr)												
Mid-Block Traffic (%)		0%			0%			0%			0%	
Shared Lane Traffic (%)												
Lane Group Flow (vph)	11	654	0	16	1060	0	0	39	49	0	24	0
Turn Type	Perm	NA		pm+pt	NA		Perm	NA	Perm	Perm	NA	
Protected Phases		6		5	2			8			4	
Permitted Phases	6			2			8		8	4		
Detector Phase	6	6		5	2		8	8	8	4	4	
Switch Phase												
Minimum Initial (s)	15.0	15.0		6.0	7.0		6.0	6.0	6.0	6.0	6.0	
Minimum Split (s)	25.7	25.7		11.7	25.7		24.0	24.0	24.0	24.0	24.0	
Total Split (s)	65.7	65.7		30.7	65.7		34.0	34.0	34.0	34.0	34.0	
Total Split (%)	50.4%	50.4%		23.5%	50.4%		26.1%	26.1%	26.1%	26.1%	26.1%	
Maximum Green (s)	60.0	60.0		25.0	60.0		30.0	30.0	30.0	30.0	30.0	
Yellow Time (s)	4.5	4.5		4.5	4.5		3.0	3.0	3.0	3.0	3.0	
All-Red Time (s)	1.2	1.2		1.2	1.2		1.0	1.0	1.0	1.0	1.0	
Lost Time Adjust (s)	0.0	0.0		0.0	0.0			0.0	0.0		0.0	
Total Lost Time (s)	5.7	5.7		5.7	5.7			4.0	4.0		4.0	
Lead/Lag	Lag	Lag		Lead								
Lead-Lag Optimize?												
Vehicle Extension (s)	5.5	5.5		4.5	5.5		3.0	3.0	3.0	3.0	3.0	
Minimum Gap (s)	2.0	2.0		0.2	2.0		1.5	1.5	1.5	1.5	1.5	
Time Before Reduce (s)	0.0	0.0		0.0	0.0		0.0	0.0	0.0	0.0	0.0	
Time To Reduce (s)	0.0	0.0		0.0	0.0		0.0	0.0	0.0	0.0	0.0	
Recall Mode	Min	Min		None	Min		None	None	None	None	None	
Walk Time (s)	6.0	6.0			6.0		6.0	6.0	6.0	6.0	6.0	
Flash Dont Walk (s)	14.0	14.0			14.0		14.0	14.0	14.0	14.0	14.0	
Pedestrian Calls (#/hr)	0	0			0		0	0	0	0	0	
v/c Ratio	0.03	0.47		0.03	0.71			0.23	0.25		0.15	
Control Delay	5.6	7.1		2.6	8.6			33.6	33.2		32.0	
Queue Delay	0.0	0.0		0.0	0.0			0.0	0.0		0.0	

Lane Group	EBL	EBT	EBR	WBL	WBT	WBR	NBL	NBT	NBR	SBL	SBT	SBR
Total Delay	5.6	7.1		2.6	8.6			33.6	33.2		32.0	
Queue Length 50th (ft)	1	81		1	195			14	18		9	
Queue Length 95th (ft)	9	303		6	408			46	54		33	
Internal Link Dist (ft)		970			2178			223			388	
Turn Bay Length (ft)	200			100					100			
Base Capacity (vph)	358	1594		930	1872			638	760		611	
Starvation Cap Reductn	0	0		0	0			0	0		0	
Spillback Cap Reductn	0	0		0	0			0	0		0	
Storage Cap Reductn	0	0		0	0			0	0		0	
Reduced v/c Ratio	0.03	0.41		0.02	0.57			0.06	0.06		0.04	

Intersection Summary

Area Type: Other
Cycle Length: 130.4
Actuated Cycle Length: 66.5
Natural Cycle: 80
Control Type: Actuated-Uncoordinated
Description: Runs Free. Ped PB. No Xwalks.

Splits and Phases: 300: HS Dwy/Fairwinds Boulevard & CTH N

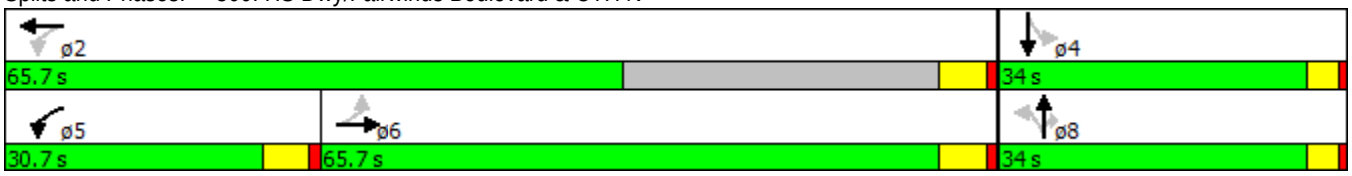

Movement	EBL	EBT	EBR	WBL	WBT	WBR	NBL	NBT	NBR	SBL	SBT	SBR
Lane Configurations												
Volume (veh/h)	10	585	10	15	930	35	35	1	90	20	1	1
Number	1	6	16	5	2	12	3	8	18	7	4	14
Initial Q (Qb), veh	0	0	0	0	0	0	0	0	0	0	0	0
Ped-Bike Adj(A_pbT)	1.00		1.00	1.00		1.00	1.00		1.00	1.00		1.00
Parking Bus, Adj	1.00	1.00	1.00	1.00	1.00	1.00	1.00	1.00	1.00	1.00	1.00	1.00
Adj Sat Flow, veh/h/ln	1845	1845	1900	1881	1881	1900	1900	1881	1881	1900	1810	1900
Adj Flow Rate, veh/h	11	643	11	16	1022	38	38	1	49	22	1	1
Adj No. of Lanes	1	1	0	1	1	0	0	1	1	0	1	0
Peak Hour Factor	0.91	0.91	0.91	0.91	0.91	0.91	0.91	0.91	0.91	0.91	0.91	0.91
Percent Heavy Veh, %	3	3	3	1	1	1	1	1	1	5	5	5
Cap, veh/h	376	1265	22	555	1438	53	207	4	116	155	7	3
Arrive On Green	0.70	0.70	0.70	0.02	0.80	0.80	0.07	0.07	0.07	0.07	0.07	0.07
Sat Flow, veh/h	525	1808	31	1792	1802	67	1547	59	1599	875	98	42
Grp Volume(v), veh/h	11	0	654	16	0	1060	39	0	49	24	0	0
Grp Sat Flow(s),veh/h/ln	525	0	1839	1792	0	1869	1606	0	1599	1015	0	0
Q Serve(g_s), s	0.7	0.0	12.4	0.2	0.0	19.8	0.0	0.0	2.2	1.1	0.0	0.0
Cycle Q Clear(g_c), s	13.1	0.0	12.4	0.2	0.0	19.8	1.5	0.0	2.2	2.6	0.0	0.0
Prop In Lane	1.00		0.02	1.00		0.04	0.97		1.00	0.92		0.04
Lane Grp Cap(c), veh/h	376	0	1286	555	0	1492	211	0	116	166	0	0
V/C Ratio(X)	0.03	0.00	0.51	0.03	0.00	0.71	0.18	0.00	0.42	0.14	0.00	0.00
Avail Cap(c_a), veh/h	430	0	1474	1112	0	1498	681	0	641	604	0	0
HCM Platoon Ratio	1.00	1.00	1.00	1.00	1.00	1.00	1.00	1.00	1.00	1.00	1.00	1.00
Upstream Filter(I)	1.00	0.00	1.00	1.00	0.00	1.00	1.00	0.00	1.00	1.00	0.00	0.00
Uniform Delay (d), s/veh	8.3	0.0	5.3	3.8	0.0	3.5	32.9	0.0	33.2	33.8	0.0	0.0
Incr Delay (d2), s/veh	0.1	0.0	0.9	0.0	0.0	2.2	0.4	0.0	2.4	0.4	0.0	0.0
Initial Q Delay(d3),s/veh	0.0	0.0	0.0	0.0	0.0	0.0	0.0	0.0	0.0	0.0	0.0	0.0
%ile BackOfQ(50%),veh/ln	0.1	0.0	6.5	0.1	0.0	10.6	0.8	0.0	1.0	0.5	0.0	0.0
LnGrp Delay(d),s/veh	8.4	0.0	6.1	3.8	0.0	5.7	33.3	0.0	35.7	34.2	0.0	0.0
LnGrp LOS	A		A	A		A	C		D	C		
Approach Vol, veh/h		665			1076			88			24	
Approach Delay, s/veh		6.2			5.7			34.6			34.2	
Approach LOS		A			A			C			C	

Timer	1	2	3	4	5	6	7	8
Assigned Phs		2		4	5	6		8
Phs Duration (G+Y+Rc), s		65.5		9.4	7.4	58.1		9.4
Change Period (Y+Rc), s		* 5.7		4.0	* 5.7	* 5.7		4.0
Max Green Setting (Gmax), s		* 60		30.0	* 25	* 60		30.0
Max Q Clear Time (g_c+I1), s		21.8		4.6	2.2	15.1		4.2
Green Ext Time (p_c), s		32.5		0.5	0.0	37.2		0.5

Intersection Summary	
HCM 2010 Ctrl Delay	7.6
HCM 2010 LOS	A

Notes

* HCM 2010 computational engine requires equal clearance times for the phases crossing the barrier.

ROUNDABOUT REPORT

General Information		Site Information	
Analyst	TSC	Intersection	STH 83/Black Bear Blvd.
Agency or Co.	TADI	E/W Street Name	Black Bear Boulevard
Date Performed	11/23/2015	N/S Street Name	
Time Period	AM Peak Hour	Analysis Year	2026 Build
Peak Hour Factor	0.88	Project ID	Chapman Property TIA - ICE Report

Project Description:

Volume Adjustment and Site Characteristics

	EB				WB				NB				SB			
	L	T	R	U	L	T	R	U	L	T	R	U	L	T	R	U
Number of Lanes (N)	0	0	0		0	0	0		0	2	0		0	2	0	
Lane Assignment							LR		T		TR		LT		T	
Right-Turn Bypass	None				None				None				None			
Conflicting Lanes	2				2				1				1			
Volume (V), veh/h	0	0	0	0	165	0	95	0	0	645	175	0	95	545	0	0
Heavy Veh. Adj. (f_{HV}), %	2	2	2	3	25	25	25	3	5	5	5	3	7	7	7	3
Pedestrians Crossing	0				0				0				0			

Critical and Follow-Up Headway Adjustment

	EB			WB			NB			SB		
	Left	Right	Bypass	Left	Right	Bypass	Left	Right	Bypass	Left	Right	Bypass
Critical Headway (sec)	4.2929	4.0000	5.1929	4.2929	4.0000	5.1929	4.2000	4.2000	5.1929	4.2000	4.2000	5.1929
Follow-Up Headway (sec)	3.1858	2.8000		3.1858	2.8000		2.8000	2.8000		2.8000	2.8000	

Flow Computations

	EB			WB			NB			SB		
	Left	Right	Bypass	Left	Right	Bypass	Left	Right	Bypass	Left	Right	Bypass
Circulating Flow (V_c), pc/h	1013			770			116			234		
Exiting Flow (V_{ex}), pc/h	324			0			905			897		
Entry Flow (V_e), pc/h		0			369		460	519		366	412	
Entry Volume veh/h					295		438	494		342	385	

Capacity and v/c Ratios

	EB			WB			NB			SB		
	Left	Right	Bypass	Left	Right	Bypass	Left	Right	Bypass	Left	Right	Bypass
Capacity (c_{PCE}), pc/h		0			737		1175	1175		1071	1071	
Capacity (c), veh/h		0			590		1119	1119		1001	1001	
v/c Ratio (X)					0.50		0.39	0.44		0.34	0.38	

Delay and Level of Service

	EB			WB			NB			SB		
	Left	Right	Bypass	Left	Right	Bypass	Left	Right	Bypass	Left	Right	Bypass
Lane Control Delay (d), s/veh					14.6		7.2	7.9		7.2	7.7	
Lane LOS		F			B		A	A		A	A	
Lane 95% Queue					2.8		1.9	2.3		1.5	1.8	
Approach Delay, s/veh				14.56			7.61			7.47		
Approach LOS, s/veh				B			A			A		
Intersection Delay, s/veh	8.61											
Intersection LOS	A											

Copyright © 2015 University of Florida, All Rights Reserved *HCS 2010*™ 6.70 Roundabouts Generated: 12/9/2015 2:29 PM

ROUNDABOUT REPORT

General Information		Site Information	
Analyst	*TSC*	Intersection	*STH 83/Black Bear Blvd.*
Agency or Co.	*TADI*	E/W Street Name	*Black Bear Boulevard*
Date Performed	*11/23/2015*	N/S Street Name	*STH 83*
Time Period	*PM Peak Hour*	Analysis Year	*2026 Build*
Peak Hour Factor	*0.92*	Project ID	*Chapman Property TIA - ICE Report*

Project Description:

Volume Adjustment and Site Characteristics

	EB				WB				NB				SB			
	L	T	R	U	L	T	R	U	L	T	R	U	L	T	R	U
Number of Lanes (N)	0	0	0		0	0	0		0	2	0		0	2	0	
Lane Assignment							LR		T		TR		LT		T	
Right-Turn Bypass	None				None				None				None			
Conflicting Lanes	2				2				1				1			
Volume (V), veh/h	0	0	0	0	180	0	85	0	0	695	145	0	95	745	0	0
Heavy Veh. Adj. (f_{HV}), %	2	2	2	3	2	2	2	3	3	3	3	3	4	4	4	3
Pedestrians Crossing	0				0				0				0			

Critical and Follow-Up Headway Adjustment

	EB			WB			NB			SB		
	Left	Right	Bypass	Left	Right	Bypass	Left	Right	Bypass	Left	Right	Bypass
Critical Headway (sec)	4.2929	4.0000	5.1929	4.2929	4.0000	5.1929	4.2000	4.2000	5.1929	4.2000	4.2000	5.1929
Follow-Up Headway (sec)	3.1858	2.8000		3.1858	2.8000		2.8000	2.8000		2.8000	2.8000	

Flow Computations

	EB			WB			NB			SB		
	Left	Right	Bypass	Left	Right	Bypass	Left	Right	Bypass	Left	Right	Bypass
Circulating Flow (V_c), pc/h	1149			778			107			200		
Exiting Flow (V_{ex}), pc/h	270			0			872			1042		
Entry Flow (V_e), pc/h		0			294		442	498		446	503	
Entry Volume veh/h					288		429	483		429	484	

Capacity and v/c Ratios

	EB			WB			NB			SB		
	Left	Right	Bypass	Left	Right	Bypass	Left	Right	Bypass	Left	Right	Bypass
Capacity (c_{PCE}), pc/h		0			733		1183	1183		1101	1101	
Capacity (c), veh/h		0			719		1148	1148		1059	1059	
v/c Ratio (X)					0.40		0.37	0.42		0.40	0.46	

Delay and Level of Service

	EB			WB			NB			SB		
	Left	Right	Bypass	Left	Right	Bypass	Left	Right	Bypass	Left	Right	Bypass
Lane Control Delay (d), s/veh					10.3		6.9	7.5		7.7	8.5	
Lane LOS		F			B		A	A		A	A	
Lane 95% Queue					1.9		1.8	2.1		2.0	2.4	
Approach Delay, s/veh				10.32			7.20			8.14		
Approach LOS, s/veh				B			A			A		
Intersection Delay, s/veh	8.03											
Intersection LOS	A											

Copyright © 2015 University of Florida, All Rights Reserved *HCS 2010*™ 6.70 Roundabouts Generated: 12/9/2015 2:30 PM

APPENDIX D

EXISTING TRANSPORTATION SYSTEM WITH TOTAL TRAFFIC OPERATIONAL ANALYSIS

D1. Base Year 2016 Total Traffic

Lane Group	EBL	EBT	EBR	WBL	WBT	WBR	NBL	NBT	NBR	SBL	SBT	SBR
Lane Configurations												
Volume (vph)	25	1	40	165	1	95	15	600	175	95	500	10
Ideal Flow (vphpl)	1900	1900	1900	1900	1900	1900	1900	1900	1900	1900	1900	1900
Lane Width (ft)	12	12	12	12	12	12	12	12	12	12	12	12
Grade (%)		0%			0%			0%			0%	
Storage Length (ft)	0		100	0		0	340		225	390		0
Storage Lanes	0		1	0		1	1		1	1		0
Taper Length (ft)	100			100			100			100		
Link Speed (mph)		30			25			35			35	
Link Distance (ft)		527			580			2325			691	
Travel Time (s)		12.0			15.8			45.3			13.5	
Confl. Peds. (#/hr)												
Confl. Bikes (#/hr)												
Peak Hour Factor	0.88	0.88	0.88	0.88	0.88	0.88	0.88	0.88	0.88	0.88	0.88	0.88
Growth Factor	100%	100%	100%	100%	100%	100%	100%	100%	100%	100%	100%	100%
Heavy Vehicles (%)	2%	2%	2%	25%	25%	25%	5%	5%	5%	7%	7%	7%
Bus Blockages (#/hr)	0	0	0	0	0	0	0	0	0	0	0	0
Parking (#/hr)												
Mid-Block Traffic (%)		0%			0%			0%			0%	
Shared Lane Traffic (%)												
Lane Group Flow (vph)	0	29	45	0	189	108	17	682	199	108	579	0
Sign Control		Stop			Stop			Free			Free	

Intersection Summary	
Area Type:	Other
Control Type: Unsignalized	

Intersection	
Int Delay, s/veh	7.1

Movement	EBL	EBT	EBR	WBL	WBT	WBR	NBL	NBT	NBR	SBL	SBT	SBR
Vol, veh/h	25	1	40	165	1	95	15	600	175	95	500	10
Conflicting Peds, #/hr	0	0	0	0	0	0	0	0	0	0	0	0
Sign Control	Stop	Stop	Stop	Stop	Stop	Stop	Free	Free	Free	Free	Free	Free
RT Channelized	-	-	None	-	-	None	-	-	None	-	-	None
Storage Length	-	-	100	-	-	0	340	-	225	390	-	-
Veh in Median Storage, #	-	1	-	-	2	-	-	0	-	-	0	-
Grade, %	-	0	-	-	0	-	-	0	-	-	0	-
Peak Hour Factor	88	88	88	88	88	88	88	88	88	88	88	88
Heavy Vehicles, %	2	2	2	25	25	25	5	5	5	7	7	7
Mvmt Flow	28	1	45	188	1	108	17	682	199	108	568	11

Major/Minor	Minor2			Minor1			Major1			Major2		
Conflicting Flow All	1166	1506	290	1217	1511	341	580	0	0	682	0	0
Stage 1	790	790	-	716	716	-	-	-	-	-	-	-
Stage 2	376	716	-	501	795	-	-	-	-	-	-	-
Critical Hdwy	7.54	6.54	6.94	8	7	7.4	4.2	-	-	4.24	-	-
Critical Hdwy Stg 1	6.54	5.54	-	7	6	-	-	-	-	-	-	-
Critical Hdwy Stg 2	6.54	5.54	-	7	6	-	-	-	-	-	-	-
Follow-up Hdwy	3.52	4.02	3.32	3.75	4.25	3.55	2.25	-	-	2.27	-	-
Pot Cap-1 Maneuver	149	120	707	~ 113	96	592	970	-	-	874	-	-
Stage 1	350	400	-	339	380	-	-	-	-	-	-	-
Stage 2	617	432	-	465	347	-	-	-	-	-	-	-
Platoon blocked, %								-	-		-	-
Mov Cap-1 Maneuver	108	103	707	~ 94	83	592	970	-	-	874	-	-
Mov Cap-2 Maneuver	215	199	-	249	229	-	-	-	-	-	-	-
Stage 1	344	351	-	333	373	-	-	-	-	-	-	-
Stage 2	494	424	-	380	304	-	-	-	-	-	-	-

Approach	EB	WB	NB	SB
HCM Control Delay, s	16	38.7	0.2	1.5
HCM LOS	C	E		

Minor Lane/Major Mvmt	NBL	NBT	NBR	EBLn1	EBLn2	WBLn1	WBLn2	SBL	SBT	SBR
Capacity (veh/h)	970	-	-	214	707	249	592	874	-	-
HCM Lane V/C Ratio	0.018	-	-	0.138	0.064	0.758	0.182	0.124	-	-
HCM Control Delay (s)	8.8	-	-	24.5	10.4	53.8	12.4	9.7	-	-
HCM Lane LOS	A	-	-	C	B	F	B	A	-	-
HCM 95th %tile Q(veh)	0.1	-	-	0.5	0.2	5.4	0.7	0.4	-	-

Notes

~: Volume exceeds capacity $: Delay exceeds 300s +: Computation Not Defined *: All major volume in platoon

Lane Group	EBL	EBT	EBR	WBL	WBT	WBR	NBL	NBT	NBR	SBL	SBT	SBR
Lane Configurations												
Volume (vph)	185	385	365	35	355	170	285	435	75	205	440	60
Ideal Flow (vphpl)	1900	1900	1900	1900	1900	1900	1900	1900	1900	1900	1900	1900
Lane Width (ft)	12	12	12	12	12	12	12	12	12	12	12	12
Grade (%)		0%			0%			0%			0%	
Storage Length (ft)	210		430	215		0	260		55	240		90
Storage Lanes	1		1	1		0	2		1	1		1
Taper Length (ft)	100			100			100			100		
Right Turn on Red			No			No			No			No
Link Speed (mph)		40			40			35			35	
Link Distance (ft)		2258			1339			1052			2325	
Travel Time (s)		38.5			22.8			20.5			45.3	
Confl. Peds. (#/hr)												
Confl. Bikes (#/hr)												
Peak Hour Factor	0.81	0.81	0.81	0.81	0.81	0.81	0.81	0.81	0.81	0.81	0.81	0.81
Growth Factor	100%	100%	50%	100%	100%	100%	100%	100%	50%	100%	100%	50%
Heavy Vehicles (%)	5%	5%	5%	5%	5%	5%	10%	10%	10%	7%	7%	7%
Bus Blockages (#/hr)	0	0	0	0	0	0	0	0	0	0	0	0
Parking (#/hr)												
Mid-Block Traffic (%)		0%			0%			0%			0%	
Shared Lane Traffic (%)												
Lane Group Flow (vph)	228	475	225	43	648	0	352	537	46	253	543	37
Turn Type	pm+pt	NA	Perm	pm+pt	NA		Prot	NA	Perm	Prot	NA	Perm
Protected Phases	7	4		3	8		1	6		5	2	
Permitted Phases	4		4	8					6			2
Detector Phase	7	4	4	3	8		1	6	6	5	2	2
Switch Phase												
Minimum Initial (s)	6.0	8.0	8.0	6.0	8.0		8.0	15.0	15.0	6.0	15.0	15.0
Minimum Split (s)	10.5	48.6	48.6	10.5	50.6		12.5	45.4	45.4	10.5	50.4	50.4
Total Split (s)	24.5	36.6	36.6	24.5	36.6		24.5	46.4	46.4	24.5	46.4	46.4
Total Split (%)	18.6%	27.7%	27.7%	18.6%	27.7%		18.6%	35.2%	35.2%	18.6%	35.2%	35.2%
Maximum Green (s)	20.0	30.0	30.0	20.0	30.0		20.0	40.0	40.0	20.0	40.0	40.0
Yellow Time (s)	3.5	4.0	4.0	3.5	4.0		3.5	3.9	3.9	3.5	3.9	3.9
All-Red Time (s)	1.0	2.6	2.6	1.0	2.6		1.0	2.5	2.5	1.0	2.5	2.5
Lost Time Adjust (s)	0.0	0.0	0.0	0.0	0.0		0.0	0.0	0.0	0.0	0.0	0.0
Total Lost Time (s)	4.5	6.6	6.6	4.5	6.6		4.5	6.4	6.4	4.5	6.4	6.4
Lead/Lag	Lead	Lag	Lag	Lead	Lag		Lead	Lag	Lag	Lead	Lag	Lag
Lead-Lag Optimize?												
Vehicle Extension (s)	1.5	1.5	1.5	1.5	1.5		1.5	4.3	4.3	1.5	3.4	3.4
Minimum Gap (s)	1.5	1.5	1.5	1.5	1.5		1.5	2.0	2.0	1.5	2.0	2.0
Time Before Reduce (s)	20.0	30.0	30.0	20.0	30.0		20.0	19.0	19.0	20.0	20.0	20.0
Time To Reduce (s)	0.0	0.0	0.0	0.0	0.0		0.0	21.0	21.0	0.0	20.0	20.0
Recall Mode	None	None	None	None	None		None	Min	Min	None	Min	Min
Walk Time (s)		7.0	7.0		7.0			7.0	7.0		7.0	7.0
Flash Dont Walk (s)		35.0	35.0		37.0			32.0	32.0		37.0	37.0
Pedestrian Calls (#/hr)		0	0		0			0	0		0	0
v/c Ratio	0.68	0.74	0.41	0.16	0.85		0.77	0.71	0.14	0.79	0.58	0.09
Control Delay	31.4	40.3	30.9	20.9	52.2		57.0	44.0	35.5	62.9	38.0	33.5
Queue Delay	0.0	0.0	0.0	0.0	0.0		0.0	0.0	0.0	0.0	0.0	0.0

Lane Group	EBL	EBT	EBR	WBL	WBT	WBR	NBL	NBT	NBR	SBL	SBT	SBR
Total Delay	31.4	40.3	30.9	20.9	52.2		57.0	44.0	35.5	62.9	38.0	33.5
Queue Length 50th (ft)	100	301	123	17	224		121	179	25	169	171	19
Queue Length 95th (ft)	152	410	189	37	293		171	231	55	#308	232	46
Internal Link Dist (ft)		2178			1259			972			2245	
Turn Bay Length (ft)	210		430	215			260		55	240		90
Base Capacity (vph)	408	641	544	472	936		607	1253	560	322	1288	576
Starvation Cap Reductn	0	0	0	0	0		0	0	0	0	0	0
Spillback Cap Reductn	0	0	0	0	0		0	0	0	0	0	0
Storage Cap Reductn	0	0	0	0	0		0	0	0	0	0	0
Reduced v/c Ratio	0.56	0.74	0.41	0.09	0.69		0.58	0.43	0.08	0.79	0.42	0.06

Intersection Summary

Area Type: Other
Cycle Length: 132
Actuated Cycle Length: 106.8
Natural Cycle: 125
Control Type: Actuated-Uncoordinated
Description: Runs Free. PB all app. Ped interval reduced to max green for HCM output.
95th percentile volume exceeds capacity, queue may be longer.
Queue shown is maximum after two cycles.

Splits and Phases: 200: STH 83/Rochester Street & CTH N

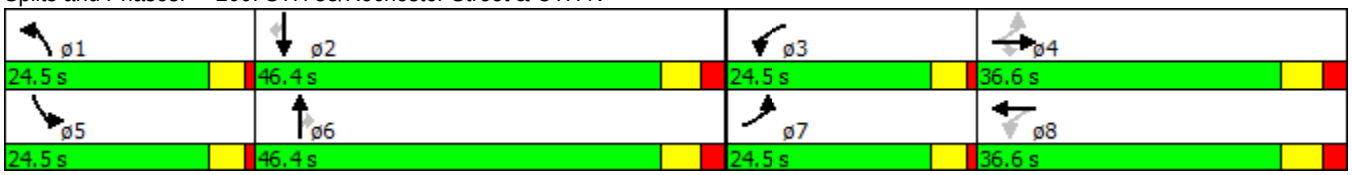

Movement	EBL	EBT	EBR	WBL	WBT	WBR	NBL	NBT	NBR	SBL	SBT	SBR
Lane Configurations												
Volume (veh/h)	185	385	365	35	355	170	285	435	75	205	440	60
Number	7	4	14	3	8	18	1	6	16	5	2	12
Initial Q (Qb), veh	0	0	0	0	0	0	0	0	0	0	0	0
Ped-Bike Adj(A_pbT)	1.00		1.00	1.00		1.00	1.00		1.00	1.00		1.00
Parking Bus, Adj	1.00	1.00	1.00	1.00	1.00	1.00	1.00	1.00	1.00	1.00	1.00	1.00
Adj Sat Flow, veh/h/ln	1810	1810	1810	1810	1810	1900	1727	1727	1727	1776	1776	1776
Adj Flow Rate, veh/h	228	475	225	43	438	210	352	537	46	253	543	37
Adj No. of Lanes	1	1	1	1	2	0	2	2	1	1	2	1
Peak Hour Factor	0.81	0.81	0.81	0.81	0.81	0.81	0.81	0.81	0.81	0.81	0.81	0.81
Percent Heavy Veh, %	5	5	5	5	5	5	10	10	10	7	7	7
Cap, veh/h	305	550	468	184	516	245	417	879	393	283	1027	459
Arrive On Green	0.12	0.30	0.30	0.04	0.23	0.23	0.13	0.27	0.27	0.17	0.30	0.30
Sat Flow, veh/h	1723	1810	1538	1723	2263	1075	3191	3282	1468	1691	3374	1509
Grp Volume(v), veh/h	228	475	225	43	332	316	352	537	46	253	543	37
Grp Sat Flow(s),veh/h/ln	1723	1810	1538	1723	1719	1620	1596	1641	1468	1691	1687	1509
Q Serve(g_s), s	9.7	24.9	12.0	1.9	18.5	18.8	10.8	14.4	2.4	14.7	13.4	1.8
Cycle Q Clear(g_c), s	9.7	24.9	12.0	1.9	18.5	18.8	10.8	14.4	2.4	14.7	13.4	1.8
Prop In Lane	1.00		1.00	1.00		0.66	1.00		1.00	1.00		1.00
Lane Grp Cap(c), veh/h	305	550	468	184	392	370	417	879	393	283	1027	459
V/C Ratio(X)	0.75	0.86	0.48	0.23	0.85	0.86	0.84	0.61	0.12	0.90	0.53	0.08
Avail Cap(c_a), veh/h	446	550	468	456	514	484	636	1307	585	337	1344	601
HCM Platoon Ratio	1.00	1.00	1.00	1.00	1.00	1.00	1.00	1.00	1.00	1.00	1.00	1.00
Upstream Filter(I)	1.00	1.00	1.00	1.00	1.00	1.00	1.00	1.00	1.00	1.00	1.00	1.00
Uniform Delay (d), s/veh	26.1	33.0	28.5	29.0	37.1	37.2	42.6	32.2	27.8	41.0	29.0	24.9
Incr Delay (d2), s/veh	1.7	12.8	0.3	0.2	7.9	9.2	4.0	1.1	0.2	20.5	0.5	0.1
Initial Q Delay(d3),s/veh	0.0	0.0	0.0	0.0	0.0	0.0	0.0	0.0	0.0	0.0	0.0	0.0
%ile BackOfQ(50%),veh/ln	4.7	14.4	5.1	0.9	9.6	9.4	5.0	6.6	1.0	8.5	6.3	0.7
LnGrp Delay(d),s/veh	27.8	45.8	28.8	29.3	44.9	46.3	46.6	33.3	28.0	61.5	29.4	25.0
LnGrp LOS	C	D	C	C	D	D	D	C	C	E	C	C
Approach Vol, veh/h		928			691			935			833	
Approach Delay, s/veh		37.2			44.6			38.0			39.0	
Approach LOS		D			D			D			D	

Timer	1	2	3	4	5	6	7	8
Assigned Phs	1	2	3	4	5	6	7	8
Phs Duration (G+Y+Rc), s	17.6	37.0	8.7	37.1	21.3	33.3	16.3	29.5
Change Period (Y+Rc), s	4.5	6.4	4.5	6.6	4.5	6.4	4.5	6.6
Max Green Setting (Gmax), s	20.0	40.0	20.0	30.0	20.0	40.0	20.0	30.0
Max Q Clear Time (g_c+I1), s	12.8	15.4	3.9	26.9	16.7	16.4	11.7	20.8
Green Ext Time (p_c), s	0.3	10.7	0.0	1.4	0.1	10.5	0.1	2.1

Intersection Summary	
HCM 2010 Ctrl Delay	39.4
HCM 2010 LOS	D

Notes

User approved pedestrian interval to be less than phase max green.

Lane Group	EBL	EBT	EBR	WBL	WBT	WBR	NBL	NBT	NBR	SBL	SBT	SBR
Lane Configurations												
Volume (vph)	5	610	30	90	590	20	60	1	270	55	1	5
Ideal Flow (vphpl)	1900	1900	1900	1900	1900	1900	1900	1900	1900	1900	1900	1900
Lane Width (ft)	12	12	12	12	12	12	12	12	12	12	12	12
Grade (%)		0%			0%			0%			0%	
Storage Length (ft)	200		0	100		0	0		100	0		0
Storage Lanes	1		0	1		0	0		1	0		0
Taper Length (ft)	100			100			100			100		
Right Turn on Red			No			No			No			No
Link Speed (mph)		40			40			25			25	
Link Distance (ft)		1050			2258			303			468	
Travel Time (s)		17.9			38.5			8.3			12.8	
Confl. Peds. (#/hr)												
Confl. Bikes (#/hr)												
Peak Hour Factor	0.72	0.72	0.72	0.72	0.72	0.72	0.72	0.72	0.72	0.72	0.72	0.72
Growth Factor	100%	100%	100%	100%	100%	100%	100%	100%	50%	100%	100%	100%
Heavy Vehicles (%)	2%	2%	2%	5%	5%	5%	12%	12%	12%	2%	2%	2%
Bus Blockages (#/hr)	0	0	0	0	0	0	0	0	0	0	0	0
Parking (#/hr)												
Mid-Block Traffic (%)		0%			0%			0%			0%	
Shared Lane Traffic (%)												
Lane Group Flow (vph)	7	889	0	125	847	0	0	84	188	0	84	0
Turn Type	Perm	NA		pm+pt	NA		Perm	NA	Perm	Perm	NA	
Protected Phases		6		5	2			8			4	
Permitted Phases	6			2			8		8	4		
Detector Phase	6	6		5	2		8	8	8	4	4	
Switch Phase												
Minimum Initial (s)	15.0	15.0		6.0	7.0		6.0	6.0	6.0	6.0	6.0	
Minimum Split (s)	25.7	25.7		11.7	25.7		24.0	24.0	24.0	24.0	24.0	
Total Split (s)	65.7	65.7		30.7	65.7		34.0	34.0	34.0	34.0	34.0	
Total Split (%)	50.4%	50.4%		23.5%	50.4%		26.1%	26.1%	26.1%	26.1%	26.1%	
Maximum Green (s)	60.0	60.0		25.0	60.0		30.0	30.0	30.0	30.0	30.0	
Yellow Time (s)	4.5	4.5		4.5	4.5		3.0	3.0	3.0	3.0	3.0	
All-Red Time (s)	1.2	1.2		1.2	1.2		1.0	1.0	1.0	1.0	1.0	
Lost Time Adjust (s)	0.0	0.0		0.0	0.0			0.0	0.0		0.0	
Total Lost Time (s)	5.7	5.7		5.7	5.7			4.0	4.0		4.0	
Lead/Lag	Lag	Lag		Lead								
Lead-Lag Optimize?												
Vehicle Extension (s)	5.5	5.5		4.5	5.5		3.0	3.0	3.0	3.0	3.0	
Minimum Gap (s)	2.0	2.0		0.2	2.0		1.5	1.5	1.5	1.5	1.5	
Time Before Reduce (s)	0.0	0.0		0.0	0.0		0.0	0.0	0.0	0.0	0.0	
Time To Reduce (s)	0.0	0.0		0.0	0.0		0.0	0.0	0.0	0.0	0.0	
Recall Mode	Min	Min		None	Min		None	None	None	None	None	
Walk Time (s)	6.0	6.0			6.0		6.0	6.0	6.0	6.0	6.0	
Flash Dont Walk (s)	14.0	14.0			14.0		14.0	14.0	14.0	14.0	14.0	
Pedestrian Calls (#/hr)	0	0			0		0	0	0	0	0	
v/c Ratio	0.02	0.86		0.40	0.64			0.39	0.74		0.37	
Control Delay	14.2	31.6		9.8	11.0			44.8	60.0		44.0	
Queue Delay	0.0	0.0		0.0	0.0			0.0	0.0		0.0	

Lane Group	EBL	EBT	EBR	WBL	WBT	WBR	NBL	NBT	NBR	SBL	SBT	SBR
Total Delay	14.2	31.6		9.8	11.0			44.8	60.0		44.0	
Queue Length 50th (ft)	2	479		21	250			51	123		51	
Queue Length 95th (ft)	9	580		40	317			81	161		80	
Internal Link Dist (ft)		970			2178			223			388	
Turn Bay Length (ft)	200			100					100			
Base Capacity (vph)	356	1039		495	1528			344	405		359	
Starvation Cap Reductn	0	0		0	0			0	0		0	
Spillback Cap Reductn	0	0		0	0			0	0		0	
Storage Cap Reductn	0	0		0	0			0	0		0	
Reduced v/c Ratio	0.02	0.86		0.25	0.55			0.24	0.46		0.23	

Intersection Summary

Area Type: Other
Cycle Length: 130.4
Actuated Cycle Length: 107.4
Natural Cycle: 90
Control Type: Actuated-Uncoordinated
Description: Runs Free. Ped PB. No Xwalks.

Splits and Phases: 300: HS Dwy/Fairwinds Boulevard & CTH N

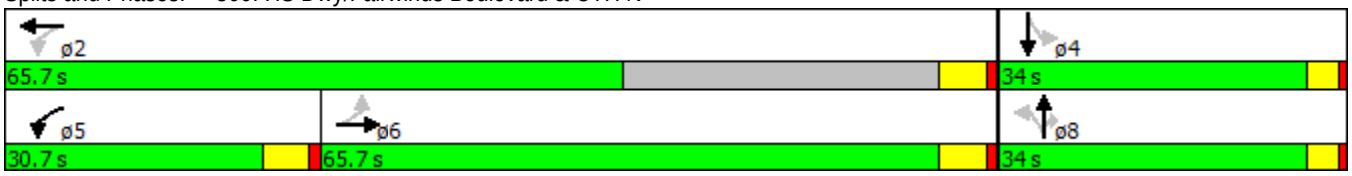

Movement	EBL	EBT	EBR	WBL	WBT	WBR	NBL	NBT	NBR	SBL	SBT	SBR
Lane Configurations												
Volume (veh/h)	5	610	30	90	590	20	60	1	270	55	1	5
Number	1	6	16	5	2	12	3	8	18	7	4	14
Initial Q (Qb), veh	0	0	0	0	0	0	0	0	0	0	0	0
Ped-Bike Adj(A_pbT)	1.00		1.00	1.00		1.00	1.00		1.00	1.00		1.00
Parking Bus, Adj	1.00	1.00	1.00	1.00	1.00	1.00	1.00	1.00	1.00	1.00	1.00	1.00
Adj Sat Flow, veh/h/ln	1863	1863	1900	1810	1810	1900	1900	1696	1696	1900	1863	1900
Adj Flow Rate, veh/h	7	847	42	125	819	28	83	1	188	76	1	7
Adj No. of Lanes	1	1	0	1	1	0	0	1	1	0	1	0
Peak Hour Factor	0.72	0.72	0.72	0.72	0.72	0.72	0.72	0.72	0.72	0.72	0.72	0.72
Percent Heavy Veh, %	2	2	2	5	5	5	12	12	12	2	2	2
Cap, veh/h	393	1051	52	327	1262	43	317	3	238	206	6	12
Arrive On Green	0.60	0.60	0.60	0.06	0.73	0.73	0.17	0.17	0.17	0.17	0.17	0.17
Sat Flow, veh/h	648	1760	87	1723	1740	59	1432	20	1442	782	34	74
Grp Volume(v), veh/h	7	0	889	125	0	847	84	0	188	84	0	0
Grp Sat Flow(s),veh/h/ln	648	0	1847	1723	0	1799	1452	0	1442	891	0	0
Q Serve(g_s), s	0.5	0.0	33.2	2.2	0.0	21.7	0.0	0.0	11.1	5.5	0.0	0.0
Cycle Q Clear(g_c), s	10.8	0.0	33.2	2.2	0.0	21.7	4.3	0.0	11.1	9.7	0.0	0.0
Prop In Lane	1.00		0.05	1.00		0.03	0.99		1.00	0.90		0.08
Lane Grp Cap(c), veh/h	393	0	1103	327	0	1305	320	0	238	224	0	0
V/C Ratio(X)	0.02	0.00	0.81	0.38	0.00	0.65	0.26	0.00	0.79	0.37	0.00	0.00
Avail Cap(c_a), veh/h	444	0	1248	701	0	1305	542	0	487	435	0	0
HCM Platoon Ratio	1.00	1.00	1.00	1.00	1.00	1.00	1.00	1.00	1.00	1.00	1.00	1.00
Upstream Filter(I)	1.00	0.00	1.00	1.00	0.00	1.00	1.00	0.00	1.00	1.00	0.00	0.00
Uniform Delay (d), s/veh	12.1	0.0	13.9	13.6	0.0	6.3	32.7	0.0	35.6	36.7	0.0	0.0
Incr Delay (d2), s/veh	0.0	0.0	4.9	1.3	0.0	1.8	0.4	0.0	5.8	1.0	0.0	0.0
Initial Q Delay(d3),s/veh	0.0	0.0	0.0	0.0	0.0	0.0	0.0	0.0	0.0	0.0	0.0	0.0
%ile BackOfQ(50%),veh/ln	0.1	0.0	18.3	1.6	0.0	11.2	1.9	0.0	4.8	2.0	0.0	0.0
LnGrp Delay(d),s/veh	12.1	0.0	18.8	14.8	0.0	8.1	33.2	0.0	41.4	37.7	0.0	0.0
LnGrp LOS	B		B	B		A	C		D	D		
Approach Vol, veh/h		896			972			272			84	
Approach Delay, s/veh		18.8			9.0			38.8			37.7	
Approach LOS		B			A			D			D	

Timer	1	2	3	4	5	6	7	8
Assigned Phs		2		4	5	6		8
Phs Duration (G+Y+Rc), s		70.1		18.7	11.4	58.7		18.7
Change Period (Y+Rc), s		* 5.7		4.0	* 5.7	* 5.7		4.0
Max Green Setting (Gmax), s		* 60		30.0	* 25	* 60		30.0
Max Q Clear Time (g_c+I1), s		23.7		11.7	4.2	35.2		13.1
Green Ext Time (p_c), s		30.8		1.6	0.6	17.8		1.6

Intersection Summary	
HCM 2010 Ctrl Delay	17.7
HCM 2010 LOS	B

Notes

* HCM 2010 computational engine requires equal clearance times for the phases crossing the barrier.

Lane Group	EBL	EBT	EBR	WBL	WBT	WBR	NBL	NBT	NBR	SBL	SBT	SBR
Lane Configurations												
Volume (vph)	30	1	45	180	1	85	55	645	145	95	685	40
Ideal Flow (vphpl)	1900	1900	1900	1900	1900	1900	1900	1900	1900	1900	1900	1900
Lane Width (ft)	12	12	12	12	12	12	12	12	12	12	12	12
Grade (%)		0%			0%			0%			0%	
Storage Length (ft)	0		100	0		0	340		225	390		0
Storage Lanes	0		1	0		1	1		1	1		0
Taper Length (ft)	100			100			100			100		
Link Speed (mph)		30			25			35			35	
Link Distance (ft)		527			580			2325			691	
Travel Time (s)		12.0			15.8			45.3			13.5	
Confl. Peds. (#/hr)												
Confl. Bikes (#/hr)												
Peak Hour Factor	0.92	0.92	0.92	0.92	0.92	0.92	0.92	0.92	0.92	0.92	0.92	0.92
Growth Factor	100%	100%	100%	100%	100%	100%	100%	100%	100%	100%	100%	100%
Heavy Vehicles (%)	2%	2%	2%	2%	2%	2%	3%	3%	3%	4%	4%	4%
Bus Blockages (#/hr)	0	0	0	0	0	0	0	0	0	0	0	0
Parking (#/hr)												
Mid-Block Traffic (%)		0%			0%			0%			0%	
Shared Lane Traffic (%)												
Lane Group Flow (vph)	0	34	49	0	197	92	60	701	158	103	788	0
Sign Control		Stop			Stop			Free			Free	

Intersection Summary	
Area Type:	Other

Control Type: Unsignalized

Intersection	
Int Delay, s/veh	9

Movement	EBL	EBT	EBR	WBL	WBT	WBR	NBL	NBT	NBR	SBL	SBT	SBR
Vol, veh/h	30	1	45	180	1	85	55	645	145	95	685	40
Conflicting Peds, #/hr	0	0	0	0	0	0	0	0	0	0	0	0
Sign Control	Stop	Stop	Stop	Stop	Stop	Stop	Free	Free	Free	Free	Free	Free
RT Channelized	-	-	None	-	-	None	-	-	None	-	-	None
Storage Length	-	-	100	-	-	0	340	-	225	390	-	-
Veh in Median Storage, #	-	1	-	-	2	-	-	0	-	-	0	-
Grade, %	-	0	-	-	0	-	-	0	-	-	0	-
Peak Hour Factor	92	92	92	92	92	92	92	92	92	92	92	92
Heavy Vehicles, %	2	2	2	2	2	2	3	3	3	4	4	4
Mvmt Flow	33	1	49	196	1	92	60	701	158	103	745	43

Major/Minor	Minor2			Minor1			Major1			Major2		
Conflicting Flow All	1444	1794	394	1400	1816	351	788	0	0	701	0	0
Stage 1	973	973	-	821	821	-	-	-	-	-	-	-
Stage 2	471	821	-	579	995	-	-	-	-	-	-	-
Critical Hdwy	7.54	6.54	6.94	7.54	6.54	6.94	4.16	-	-	4.18	-	-
Critical Hdwy Stg 1	6.54	5.54	-	6.54	5.54	-	-	-	-	-	-	-
Critical Hdwy Stg 2	6.54	5.54	-	6.54	5.54	-	-	-	-	-	-	-
Follow-up Hdwy	3.52	4.02	3.32	3.52	4.02	3.32	2.23	-	-	2.24	-	-
Pot Cap-1 Maneuver	93	80	605	~ 100	77	645	821	-	-	879	-	-
Stage 1	271	329	-	335	387	-	-	-	-	-	-	-
Stage 2	542	387	-	468	321	-	-	-	-	-	-	-
Platoon blocked, %								-	-		-	-
Mov Cap-1 Maneuver	68	65	605	~ 79	63	645	821	-	-	879	-	-
Mov Cap-2 Maneuver	160	154	-	224	187	-	-	-	-	-	-	-
Stage 1	251	290	-	311	359	-	-	-	-	-	-	-
Stage 2	429	359	-	378	283	-	-	-	-	-	-	-

Approach	EB	WB	NB	SB
HCM Control Delay, s	20.4	56.8	0.6	1.1
HCM LOS	C	F		

Minor Lane/Major Mvmt	NBL	NBT	NBR	EBLn1	EBLn2	WBLn1	WBLn2	SBL	SBT	SBR
Capacity (veh/h)	821	-	-	160	605	224	645	879	-	-
HCM Lane V/C Ratio	0.073	-	-	0.211	0.081	0.878	0.143	0.117	-	-
HCM Control Delay (s)	9.7	-	-	33.4	11.5	78	11.5	9.6	-	-
HCM Lane LOS	A	-	-	D	B	F	B	A	-	-
HCM 95th %tile Q(veh)	0.2	-	-	0.8	0.3	7.1	0.5	0.4	-	-

Notes

~: Volume exceeds capacity $: Delay exceeds 300s +: Computation Not Defined *: All major volume in platoon

Lane Group	EBL	EBT	EBR	WBL	WBT	WBR	NBL	NBT	NBR	SBL	SBT	SBR
Lane Configurations												
Volume (vph)	120	240	305	95	370	215	370	510	80	190	525	195
Ideal Flow (vphpl)	1900	1900	1900	1900	1900	1900	1900	1900	1900	1900	1900	1900
Lane Width (ft)	12	12	12	12	12	12	12	12	12	12	12	12
Grade (%)		0%			0%			0%			0%	
Storage Length (ft)	210		430	215		0	260		55	240		90
Storage Lanes	1		1	1		0	2		1	1		1
Taper Length (ft)	100			100			100			100		
Right Turn on Red			No			No			No			No
Link Speed (mph)		40			40			35			35	
Link Distance (ft)		2258			1339			1052			2325	
Travel Time (s)		38.5			22.8			20.5			45.3	
Confl. Peds. (#/hr)												
Confl. Bikes (#/hr)												
Peak Hour Factor	0.93	0.93	0.93	0.93	0.93	0.93	0.93	0.93	0.93	0.93	0.93	0.93
Growth Factor	100%	100%	50%	100%	100%	100%	100%	100%	50%	100%	100%	50%
Heavy Vehicles (%)	3%	3%	3%	1%	1%	1%	2%	2%	2%	3%	3%	3%
Bus Blockages (#/hr)	0	0	0	0	0	0	0	0	0	0	0	0
Parking (#/hr)												
Mid-Block Traffic (%)		0%			0%			0%			0%	
Shared Lane Traffic (%)												
Lane Group Flow (vph)	129	258	164	102	629	0	398	548	43	204	565	105
Turn Type	pm+pt	NA	Perm	pm+pt	NA		Prot	NA	Perm	Prot	NA	Perm
Protected Phases	7	4		3	8		1	6		5	2	
Permitted Phases	4		4	8					6			2
Detector Phase	7	4	4	3	8		1	6	6	5	2	2
Switch Phase												
Minimum Initial (s)	6.0	8.0	8.0	6.0	8.0		8.0	15.0	15.0	6.0	15.0	15.0
Minimum Split (s)	10.5	48.6	48.6	10.5	50.6		12.5	45.4	45.4	10.5	50.4	50.4
Total Split (s)	24.5	36.6	36.6	24.5	36.6		24.5	46.4	46.4	24.5	46.4	46.4
Total Split (%)	18.6%	27.7%	27.7%	18.6%	27.7%		18.6%	35.2%	35.2%	18.6%	35.2%	35.2%
Maximum Green (s)	20.0	30.0	30.0	20.0	30.0		20.0	40.0	40.0	20.0	40.0	40.0
Yellow Time (s)	3.5	4.0	4.0	3.5	4.0		3.5	3.9	3.9	3.5	3.9	3.9
All-Red Time (s)	1.0	2.6	2.6	1.0	2.6		1.0	2.5	2.5	1.0	2.5	2.5
Lost Time Adjust (s)	0.0	0.0	0.0	0.0	0.0		0.0	0.0	0.0	0.0	0.0	0.0
Total Lost Time (s)	4.5	6.6	6.6	4.5	6.6		4.5	6.4	6.4	4.5	6.4	6.4
Lead/Lag	Lead	Lag	Lag	Lead	Lag		Lead	Lag	Lag	Lead	Lag	Lag
Lead-Lag Optimize?												
Vehicle Extension (s)	1.5	1.5	1.5	1.5	1.5		1.5	4.3	4.3	1.5	3.4	3.4
Minimum Gap (s)	1.5	1.5	1.5	1.5	1.5		1.5	2.0	2.0	1.5	2.0	2.0
Time Before Reduce (s)	20.0	30.0	30.0	20.0	30.0		20.0	19.0	19.0	20.0	20.0	20.0
Time To Reduce (s)	0.0	0.0	0.0	0.0	0.0		0.0	21.0	21.0	0.0	20.0	20.0
Recall Mode	None	None	None	None	None		None	Min	Min	None	Min	Min
Walk Time (s)		7.0	7.0		7.0			7.0	7.0		7.0	7.0
Flash Dont Walk (s)		35.0	35.0		37.0			32.0	32.0		37.0	37.0
Pedestrian Calls (#/hr)		0	0		0			0	0		0	0
v/c Ratio	0.44	0.55	0.41	0.25	0.79		0.71	0.63	0.11	0.70	0.65	0.27
Control Delay	23.4	36.0	33.7	20.3	42.5		46.1	36.0	31.1	52.8	36.2	32.7
Queue Delay	0.0	0.0	0.0	0.0	0.0		0.0	0.0	0.0	0.0	0.0	0.0

Lane Group	EBL	EBT	EBR	WBL	WBT	WBR	NBL	NBT	NBR	SBL	SBT	SBR
Total Delay	23.4	36.0	33.7	20.3	42.5		46.1	36.0	31.1	52.8	36.2	32.7
Queue Length 50th (ft)	47	131	80	37	184		116	152	20	115	156	50
Queue Length 95th (ft)	100	246	163	81	295		200	248	55	#230	257	112
Internal Link Dist (ft)		2178			1259			972			2245	
Turn Bay Length (ft)	210		430	215			260		55	240		90
Base Capacity (vph)	470	630	536	588	1137		770	1588	710	393	1573	703
Starvation Cap Reductn	0	0	0	0	0		0	0	0	0	0	0
Spillback Cap Reductn	0	0	0	0	0		0	0	0	0	0	0
Storage Cap Reductn	0	0	0	0	0		0	0	0	0	0	0
Reduced v/c Ratio	0.27	0.41	0.31	0.17	0.55		0.52	0.35	0.06	0.52	0.36	0.15

Intersection Summary

Area Type: Other
Cycle Length: 132
Actuated Cycle Length: 92.5
Natural Cycle: 125
Control Type: Actuated-Uncoordinated
Description: Runs Free. PB all app. Ped interval reduced to max green for HCM output.
95th percentile volume exceeds capacity, queue may be longer.
Queue shown is maximum after two cycles.

Splits and Phases: 200: STH 83/Rochester Street & CTH N

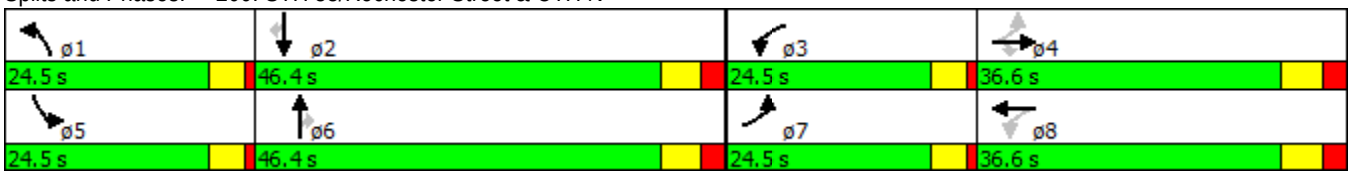

Movement	EBL	EBT	EBR	WBL	WBT	WBR	NBL	NBT	NBR	SBL	SBT	SBR
Lane Configurations												
Volume (veh/h)	120	240	305	95	370	215	370	510	80	190	525	195
Number	7	4	14	3	8	18	1	6	16	5	2	12
Initial Q (Qb), veh	0	0	0	0	0	0	0	0	0	0	0	0
Ped-Bike Adj(A_pbT)	1.00		1.00	1.00		1.00	1.00		1.00	1.00		1.00
Parking Bus, Adj	1.00	1.00	1.00	1.00	1.00	1.00	1.00	1.00	1.00	1.00	1.00	1.00
Adj Sat Flow, veh/h/ln	1845	1845	1845	1881	1881	1900	1863	1863	1863	1845	1845	1845
Adj Flow Rate, veh/h	129	258	164	102	398	231	398	548	43	204	565	105
Adj No. of Lanes	1	1	1	1	2	0	2	2	1	1	2	1
Peak Hour Factor	0.93	0.93	0.93	0.93	0.93	0.93	0.93	0.93	0.93	0.93	0.93	0.93
Percent Heavy Veh, %	3	3	3	1	1	1	2	2	2	3	3	3
Cap, veh/h	259	438	372	311	495	284	483	1065	476	241	1043	467
Arrive On Green	0.08	0.24	0.24	0.06	0.23	0.23	0.14	0.30	0.30	0.14	0.30	0.30
Sat Flow, veh/h	1757	1845	1568	1792	2191	1256	3442	3539	1583	1757	3505	1568
Grp Volume(v), veh/h	129	258	164	102	324	305	398	548	43	204	565	105
Grp Sat Flow(s),veh/h/ln	1757	1845	1568	1792	1787	1660	1721	1770	1583	1757	1752	1568
Q Serve(g_s), s	4.7	10.5	7.5	3.6	14.5	14.8	9.5	10.8	1.7	9.6	11.4	4.3
Cycle Q Clear(g_c), s	4.7	10.5	7.5	3.6	14.5	14.8	9.5	10.8	1.7	9.6	11.4	4.3
Prop In Lane	1.00		1.00	1.00		0.76	1.00		1.00	1.00		1.00
Lane Grp Cap(c), veh/h	259	438	372	311	404	375	483	1065	476	241	1043	467
V/C Ratio(X)	0.50	0.59	0.44	0.33	0.80	0.81	0.82	0.51	0.09	0.85	0.54	0.22
Avail Cap(c_a), veh/h	541	654	556	619	634	589	814	1674	749	415	1658	742
HCM Platoon Ratio	1.00	1.00	1.00	1.00	1.00	1.00	1.00	1.00	1.00	1.00	1.00	1.00
Upstream Filter(I)	1.00	1.00	1.00	1.00	1.00	1.00	1.00	1.00	1.00	1.00	1.00	1.00
Uniform Delay (d), s/veh	23.8	28.6	27.5	23.2	31.0	31.1	35.3	24.5	21.2	35.6	24.9	22.4
Incr Delay (d2), s/veh	0.6	0.5	0.3	0.2	1.8	2.3	1.4	0.6	0.1	3.2	0.5	0.3
Initial Q Delay(d3),s/veh	0.0	0.0	0.0	0.0	0.0	0.0	0.0	0.0	0.0	0.0	0.0	0.0
%ile BackOfQ(50%),veh/ln	2.3	5.4	3.3	1.8	7.3	7.0	4.6	5.3	0.7	4.9	5.6	1.9
LnGrp Delay(d),s/veh	24.3	29.1	27.8	23.4	32.7	33.4	36.7	25.1	21.4	38.8	25.4	22.6
LnGrp LOS	C	C	C	C	C	C	D	C	C	D	C	C
Approach Vol, veh/h		551			731			989			874	
Approach Delay, s/veh		27.6			31.7			29.6			28.2	
Approach LOS		C			C			C			C	

Timer	1	2	3	4	5	6	7	8
Assigned Phs	1	2	3	4	5	6	7	8
Phs Duration (G+Y+Rc), s	16.4	31.6	10.0	26.7	16.1	31.9	10.9	25.7
Change Period (Y+Rc), s	4.5	6.4	4.5	6.6	4.5	6.4	4.5	6.6
Max Green Setting (Gmax), s	20.0	40.0	20.0	30.0	20.0	40.0	20.0	30.0
Max Q Clear Time (g_c+I1), s	11.5	13.4	5.6	12.5	11.6	12.8	6.7	16.8
Green Ext Time (p_c), s	0.4	11.8	0.1	2.5	0.1	11.9	0.1	2.3

Intersection Summary	
HCM 2010 Ctrl Delay	29.3
HCM 2010 LOS	C

Notes

User approved pedestrian interval to be less than phase max green.

Lane Group	EBL	EBT	EBR	WBL	WBT	WBR	NBL	NBT	NBR	SBL	SBT	SBR
Lane Configurations												
Volume (vph)	10	540	5	15	860	60	35	1	85	40	1	5
Ideal Flow (vphpl)	1900	1900	1900	1900	1900	1900	1900	1900	1900	1900	1900	1900
Lane Width (ft)	12	12	12	12	12	12	12	12	12	12	12	12
Grade (%)		0%			0%			0%			0%	
Storage Length (ft)	200		0	100		0	0		100	0		0
Storage Lanes	1		0	1		0	0		1	0		0
Taper Length (ft)	100			100			100			100		
Right Turn on Red			No			No			No			No
Link Speed (mph)		40			40			25			25	
Link Distance (ft)		1050			2258			303			468	
Travel Time (s)		17.9			38.5			8.3			12.8	
Confl. Peds. (#/hr)												
Confl. Bikes (#/hr)												
Peak Hour Factor	0.91	0.91	0.91	0.91	0.91	0.91	0.91	0.91	0.91	0.91	0.91	0.91
Growth Factor	100%	100%	100%	100%	100%	100%	100%	100%	50%	100%	100%	100%
Heavy Vehicles (%)	3%	3%	3%	1%	1%	1%	1%	1%	1%	5%	5%	5%
Bus Blockages (#/hr)	0	0	0	0	0	0	0	0	0	0	0	0
Parking (#/hr)												
Mid-Block Traffic (%)		0%			0%			0%			0%	
Shared Lane Traffic (%)												
Lane Group Flow (vph)	11	598	0	16	1011	0	0	39	47	0	50	0
Turn Type	Perm	NA		pm+pt	NA		Perm	NA	Perm	Perm	NA	
Protected Phases		6		5	2			8			4	
Permitted Phases	6			2			8		8	4		
Detector Phase	6	6		5	2		8	8	8	4	4	
Switch Phase												
Minimum Initial (s)	15.0	15.0		6.0	7.0		6.0	6.0	6.0	6.0	6.0	
Minimum Split (s)	25.7	25.7		11.7	25.7		24.0	24.0	24.0	24.0	24.0	
Total Split (s)	65.7	65.7		30.7	65.7		34.0	34.0	34.0	34.0	34.0	
Total Split (%)	50.4%	50.4%		23.5%	50.4%		26.1%	26.1%	26.1%	26.1%	26.1%	
Maximum Green (s)	60.0	60.0		25.0	60.0		30.0	30.0	30.0	30.0	30.0	
Yellow Time (s)	4.5	4.5		4.5	4.5		3.0	3.0	3.0	3.0	3.0	
All-Red Time (s)	1.2	1.2		1.2	1.2		1.0	1.0	1.0	1.0	1.0	
Lost Time Adjust (s)	0.0	0.0		0.0	0.0			0.0	0.0		0.0	
Total Lost Time (s)	5.7	5.7		5.7	5.7			4.0	4.0		4.0	
Lead/Lag	Lag	Lag		Lead								
Lead-Lag Optimize?												
Vehicle Extension (s)	5.5	5.5		4.5	5.5		3.0	3.0	3.0	3.0	3.0	
Minimum Gap (s)	2.0	2.0		0.2	2.0		1.5	1.5	1.5	1.5	1.5	
Time Before Reduce (s)	0.0	0.0		0.0	0.0		0.0	0.0	0.0	0.0	0.0	
Time To Reduce (s)	0.0	0.0		0.0	0.0		0.0	0.0	0.0	0.0	0.0	
Recall Mode	Min	Min		None	Min		None	None	None	None	None	
Walk Time (s)	6.0	6.0			6.0		6.0	6.0	6.0	6.0	6.0	
Flash Dont Walk (s)	14.0	14.0			14.0		14.0	14.0	14.0	14.0	14.0	
Pedestrian Calls (#/hr)	0	0			0		0	0	0	0	0	
v/c Ratio	0.03	0.43		0.03	0.70			0.19	0.22		0.29	
Control Delay	5.9	7.1		2.9	8.6			30.8	31.0		33.2	
Queue Delay	0.0	0.0		0.0	0.0			0.0	0.0		0.0	

Lane Group	EBL	EBT	EBR	WBL	WBT	WBR	NBL	NBT	NBR	SBL	SBT	SBR
Total Delay	5.9	7.1		2.9	8.6			30.8	31.0		33.2	
Queue Length 50th (ft)	1	73		1	184			13	16		17	
Queue Length 95th (ft)	9	275		6	388			45	52		55	
Internal Link Dist (ft)		970			2178			223			388	
Turn Bay Length (ft)	200			100					100			
Base Capacity (vph)	403	1667		955	1862			746	794		641	
Starvation Cap Reductn	0	0		0	0			0	0		0	
Spillback Cap Reductn	0	0		0	0			0	0		0	
Storage Cap Reductn	0	0		0	0			0	0		0	
Reduced v/c Ratio	0.03	0.36		0.02	0.54			0.05	0.06		0.08	

Intersection Summary

Area Type: Other
Cycle Length: 130.4
Actuated Cycle Length: 63.6
Natural Cycle: 75
Control Type: Actuated-Uncoordinated
Description: Runs Free. Ped PB. No Xwalks.

Splits and Phases: 300: HS Dwy/Fairwinds Boulevard & CTH N

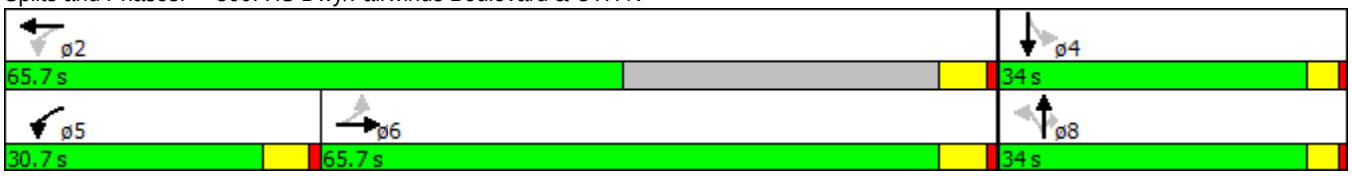

Movement	EBL	EBT	EBR	WBL	WBT	WBR	NBL	NBT	NBR	SBL	SBT	SBR
Lane Configurations												
Volume (veh/h)	10	540	5	15	860	60	35	1	85	40	1	5
Number	1	6	16	5	2	12	3	8	18	7	4	14
Initial Q (Qb), veh	0	0	0	0	0	0	0	0	0	0	0	0
Ped-Bike Adj(A_pbT)	1.00		1.00	1.00		1.00	1.00		1.00	1.00		1.00
Parking Bus, Adj	1.00	1.00	1.00	1.00	1.00	1.00	1.00	1.00	1.00	1.00	1.00	1.00
Adj Sat Flow, veh/h/ln	1845	1845	1900	1881	1881	1900	1900	1881	1881	1900	1810	1900
Adj Flow Rate, veh/h	11	593	5	16	945	66	38	1	47	44	1	5
Adj No. of Lanes	1	1	0	1	1	0	0	1	1	0	1	0
Peak Hour Factor	0.91	0.91	0.91	0.91	0.91	0.91	0.91	0.91	0.91	0.91	0.91	0.91
Percent Heavy Veh, %	3	3	3	1	1	1	1	1	1	5	5	5
Cap, veh/h	390	1250	11	579	1365	95	228	5	131	165	8	9
Arrive On Green	0.68	0.68	0.68	0.02	0.79	0.79	0.08	0.08	0.08	0.08	0.08	0.08
Sat Flow, veh/h	550	1827	15	1792	1738	121	1601	59	1599	886	93	109
Grp Volume(v), veh/h	11	0	598	16	0	1011	39	0	47	50	0	0
Grp Sat Flow(s),veh/h/ln	550	0	1842	1792	0	1860	1659	0	1599	1087	0	0
Q Serve(g_s), s	0.7	0.0	11.1	0.2	0.0	18.7	0.0	0.0	2.0	2.3	0.0	0.0
Cycle Q Clear(g_c), s	12.0	0.0	11.1	0.2	0.0	18.7	1.5	0.0	2.0	3.8	0.0	0.0
Prop In Lane	1.00		0.01	1.00		0.07	0.97		1.00	0.88		0.10
Lane Grp Cap(c), veh/h	390	0	1260	579	0	1460	233	0	131	182	0	0
V/C Ratio(X)	0.03	0.00	0.47	0.03	0.00	0.69	0.17	0.00	0.36	0.28	0.00	0.00
Avail Cap(c_a), veh/h	466	0	1515	1152	0	1530	703	0	658	623	0	0
HCM Platoon Ratio	1.00	1.00	1.00	1.00	1.00	1.00	1.00	1.00	1.00	1.00	1.00	1.00
Upstream Filter(I)	1.00	0.00	1.00	1.00	0.00	1.00	1.00	0.00	1.00	1.00	0.00	0.00
Uniform Delay (d), s/veh	8.2	0.0	5.4	3.8	0.0	3.7	31.4	0.0	31.7	32.9	0.0	0.0
Incr Delay (d2), s/veh	0.1	0.0	0.8	0.0	0.0	2.0	0.3	0.0	1.7	0.8	0.0	0.0
Initial Q Delay(d3),s/veh	0.0	0.0	0.0	0.0	0.0	0.0	0.0	0.0	0.0	0.0	0.0	0.0
%ile BackOfQ(50%),veh/ln	0.1	0.0	5.8	0.1	0.0	10.1	0.8	0.0	0.9	1.0	0.0	0.0
LnGrp Delay(d),s/veh	8.3	0.0	6.1	3.8	0.0	5.7	31.8	0.0	33.3	33.7	0.0	0.0
LnGrp LOS	A		A	A		A	C		C	C		
Approach Vol, veh/h		609			1027			86			50	
Approach Delay, s/veh		6.2			5.6			32.6			33.7	
Approach LOS		A			A			C			C	

Timer	1	2	3	4	5	6	7	8
Assigned Phs		2		4	5	6		8
Phs Duration (G+Y+Rc), s		63.0		10.0	7.4	55.6		10.0
Change Period (Y+Rc), s		* 5.7		4.0	* 5.7	* 5.7		4.0
Max Green Setting (Gmax), s		* 60		30.0	* 25	* 60		30.0
Max Q Clear Time (g_c+I1), s		20.7		5.8	2.2	14.0		4.0
Green Ext Time (p_c), s		31.7		0.6	0.0	35.9		0.6

Intersection Summary	
HCM 2010 Ctrl Delay	7.9
HCM 2010 LOS	A

Notes

* HCM 2010 computational engine requires equal clearance times for the phases crossing the barrier.

ROUNDABOUT REPORT

General Information		Site Information	
Analyst	TSC	Intersection	STH 83/Black Bear Blvd.
Agency or Co.	TADI	E/W Street Name	Black Bear Boulevard
Date Performed	11/23/2015	N/S Street Name	STH 83
Time Period	AM Peak Hour	Analysis Year	2016 Total
Peak Hour Factor	0.88	Project ID	Chapman Property TIA - ICE Report

Project Description:

Volume Adjustment and Site Characteristics

	EB				WB				NB				SB			
	L	T	R	U	L	T	R	U	L	T	R	U	L	T	R	U
Number of Lanes (N)	0	1	0		0	1	0		0	2	0		0	2	0	
Lane Assignment			LTR				LTR		LT		TR		LT		TR	
Right-Turn Bypass	None				None				None				None			
Conflicting Lanes	2				2				1				1			
Volume (V), veh/h	25	1	40	0	165	1	95	0	15	600	175	0	95	500	10	0
Heavy Veh. Adj. (f_{HV}), %	2	2	2	3	25	25	25	3	5	5	5	3	7	7	7	3
Pedestrians Crossing	0				0				0				0			

Critical and Follow-Up Headway Adjustment

	EB			WB			NB			SB		
	Left	Right	Bypass	Left	Right	Bypass	Left	Right	Bypass	Left	Right	Bypass
Critical Headway (sec)	4.2929	4.0000	5.1929	4.2929	4.0000	5.1929	4.2000	4.2000	5.1929	4.2000	4.2000	5.1929
Follow-Up Headway (sec)	3.1858	2.8000		3.1858	2.8000		2.8000	2.8000		2.8000	2.8000	

Flow Computations

	EB			WB			NB			SB		
	Left	Right	Bypass	Left	Right	Bypass	Left	Right	Bypass	Left	Right	Bypass
Circulating Flow (V_c), pc/h	958			763			146			253		
Exiting Flow (V_{ex}), pc/h	325			31			880			889		
Entry Flow (V_e), pc/h		77			371		443	500		346	390	
Entry Volume veh/h		75			297		422	476		323	364	

Capacity and v/c Ratios

	EB			WB			NB			SB		
	Left	Right	Bypass	Left	Right	Bypass	Left	Right	Bypass	Left	Right	Bypass
Capacity (c_{PCE}), pc/h		644			741		1148	1148		1055	1055	
Capacity (c), veh/h		631			593		1093	1093		986	986	
v/c Ratio (X)		0.12			0.50		0.39	0.44		0.33	0.37	

Delay and Level of Service

	EB			WB			NB			SB		
	Left	Right	Bypass	Left	Right	Bypass	Left	Right	Bypass	Left	Right	Bypass
Lane Control Delay (d), s/veh		7.1			14.5		7.3	8.0		7.1	7.6	
Lane LOS		A			B		A	A		A	A	
Lane 95% Queue		0.4			2.8		1.8	2.3		1.4	1.7	
Approach Delay, s/veh	7.08			14.50			7.66			7.36		
Approach LOS, s/veh	A			B			A			A		
Intersection Delay, s/veh	8.57											
Intersection LOS	A											

Copyright © 2015 University of Florida, All Rights Reserved *HCS 2010*™ 6.70 Roundabouts Generated: 12/9/2015 2:26 PM

ROUNDABOUT REPORT

General Information		Site Information	
Analyst	TSC	Intersection	STH 83/Black Bear Blvd.
Agency or Co.	TADI	E/W Street Name	Black Bear Boulevard
Date Performed	11/23/2015	N/S Street Name	STH 83
Time Period	PM Peak Hour	Analysis Year	2016 Total
Peak Hour Factor	0.92	Project ID	Chapman Property TIA - ICE Report

Project Description:

Volume Adjustment and Site Characteristics

	EB				WB				NB				SB			
	L	T	R	U	L	T	R	U	L	T	R	U	L	T	R	U
Number of Lanes (N)	0	1	0		0	1	0		0	2	0		0	2	0	
Lane Assignment			LTR				LTR		LT		TR		LT		TR	
Right-Turn Bypass	None				None				None				None			
Conflicting Lanes	2				2				1				1			
Volume (V), veh/h	30	1	45	0	180	1	85	0	55	645	145	0	95	685	40	0
Heavy Veh. Adj. (f_{HV}), %	2	2	2	3	2	2	2	3	3	3	3	3	4	4	4	3
Pedestrians Crossing	0				0				0				0			

Critical and Follow-Up Headway Adjustment

	EB			WB			NB			SB		
	Left	Right	Bypass	Left	Right	Bypass	Left	Right	Bypass	Left	Right	Bypass
Critical Headway (sec)	4.2929	4.0000	5.1929	4.2929	4.0000	5.1929	4.2000	4.2000	5.1929	4.2000	4.2000	5.1929
Follow-Up Headway (sec)	3.1858	2.8000		3.1858	2.8000		2.8000	2.8000		2.8000	2.8000	

Flow Computations

	EB			WB			NB			SB		
	Left	Right	Bypass	Left	Right	Bypass	Left	Right	Bypass	Left	Right	Bypass
Circulating Flow (V_c), pc/h	1081			817			141			263		
Exiting Flow (V_{ex}), pc/h	271			108			850			1024		
Entry Flow (V_e), pc/h		84			295		445	501		436	491	
Entry Volume veh/h		82			289		432	486		419	472	

Capacity and v/c Ratios

	EB			WB			NB			SB		
	Left	Right	Bypass	Left	Right	Bypass	Left	Right	Bypass	Left	Right	Bypass
Capacity (c_{PCE}), pc/h		589			713		1151	1151		1048	1048	
Capacity (c), veh/h		577			699		1118	1118		1008	1008	
v/c Ratio (X)		0.14			0.41		0.39	0.44		0.42	0.47	

Delay and Level of Service

	EB			WB			NB			SB		
	Left	Right	Bypass	Left	Right	Bypass	Left	Right	Bypass	Left	Right	Bypass
Lane Control Delay (d), s/veh		8.0			10.8		7.2	7.9		8.2	9.0	
Lane LOS		A			B		A	A		A	A	
Lane 95% Queue		0.5			2.0		1.8	2.2		2.1	2.5	
Approach Delay, s/veh	7.99			10.81			7.53			8.62		
Approach LOS, s/veh	A			B			A			A		
Intersection Delay, s/veh	8.43											
Intersection LOS	A											

Copyright © 2015 University of Florida, All Rights Reserved *HCS 2010*™ 6.70 Roundabouts Generated: 12/9/2015 2:27 PM

APPENDIX D

EXISTING TRANSPORTATION SYSTEM WITH TOTAL TRAFFIC OPERATIONAL ANALYSIS

D2. Horizon Year 2026 Total Traffic

Lane Group	EBL	EBT	EBR	WBL	WBT	WBR	NBL	NBT	NBR	SBL	SBT	SBR
Lane Configurations												
Volume (vph)	75	1	110	165	1	95	80	645	175	95	545	55
Ideal Flow (vphpl)	1900	1900	1900	1900	1900	1900	1900	1900	1900	1900	1900	1900
Lane Width (ft)	12	12	12	12	12	12	12	12	12	12	12	12
Grade (%)		0%			0%			0%			0%	
Storage Length (ft)	0		100	0		0	340		225	390		0
Storage Lanes	0		1	0		1	1		1	1		0
Taper Length (ft)	100			100			100			100		
Link Speed (mph)		30			25			35			35	
Link Distance (ft)		527			580			2325			691	
Travel Time (s)		12.0			15.8			45.3			13.5	
Confl. Peds. (#/hr)												
Confl. Bikes (#/hr)												
Peak Hour Factor	0.88	0.88	0.88	0.88	0.88	0.88	0.88	0.88	0.88	0.88	0.88	0.88
Growth Factor	100%	100%	100%	100%	100%	100%	100%	100%	100%	100%	100%	100%
Heavy Vehicles (%)	2%	2%	2%	25%	25%	25%	5%	5%	5%	7%	7%	7%
Bus Blockages (#/hr)	0	0	0	0	0	0	0	0	0	0	0	0
Parking (#/hr)												
Mid-Block Traffic (%)		0%			0%			0%			0%	
Shared Lane Traffic (%)												
Lane Group Flow (vph)	0	86	125	0	189	108	91	733	199	108	681	0
Sign Control		Stop			Stop			Free			Free	

Intersection Summary	
Area Type:	Other
Control Type: Unsignalized	

Intersection	
Int Delay, s/veh	19.7

Movement	EBL	EBT	EBR	WBL	WBT	WBR	NBL	NBT	NBR	SBL	SBT	SBR
Vol, veh/h	75	1	110	165	1	95	80	645	175	95	545	55
Conflicting Peds, #/hr	0	0	0	0	0	0	0	0	0	0	0	0
Sign Control	Stop	Stop	Stop	Stop	Stop	Stop	Free	Free	Free	Free	Free	Free
RT Channelized	-	-	None	-	-	None	-	-	None	-	-	None
Storage Length	-	-	100	-	-	0	340	-	225	390	-	-
Veh in Median Storage, #	-	1	-	-	2	-	-	0	-	-	0	-
Grade, %	-	0	-	-	0	-	-	0	-	-	0	-
Peak Hour Factor	88	88	88	88	88	88	88	88	88	88	88	88
Heavy Vehicles, %	2	2	2	25	25	25	5	5	5	7	7	7
Mvmt Flow	85	1	125	188	1	108	91	733	199	108	619	62

Major/Minor	Minor2			Minor1			Major1			Major2		
Conflicting Flow All	1415	1781	341	1441	1813	366	682	0	0	733	0	0
Stage 1	866	866	-	915	915	-	-	-	-	-	-	-
Stage 2	549	915	-	526	898	-	-	-	-	-	-	-
Critical Hdwy	7.54	6.54	6.94	8	7	7.4	4.2	-	-	4.24	-	-
Critical Hdwy Stg 1	6.54	5.54	-	7	6	-	-	-	-	-	-	-
Critical Hdwy Stg 2	6.54	5.54	-	7	6	-	-	-	-	-	-	-
Follow-up Hdwy	3.52	4.02	3.32	3.75	4.25	3.55	2.25	-	-	2.27	-	-
Pot Cap-1 Maneuver	97	81	655	~ 75	60	569	887	-	-	835	-	-
Stage 1	314	369	-	251	301	-	-	-	-	-	-	-
Stage 2	488	350	-	448	308	-	-	-	-	-	-	-
Platoon blocked, %								-	-		-	-
Mov Cap-1 Maneuver	~ 65	63	655	~ 50	47	569	887	-	-	835	-	-
Mov Cap-2 Maneuver	149	141	-	~ 158	146	-	-	-	-	-	-	-
Stage 1	282	321	-	225	270	-	-	-	-	-	-	-
Stage 2	353	314	-	314	268	-	-	-	-	-	-	-

Approach	EB	WB	NB	SB
HCM Control Delay, s	30.7	125.7	0.8	1.4
HCM LOS	D	F		

Minor Lane/Major Mvmt	NBL	NBT	NBR	EBLn1	EBLn2	WBLn1	WBLn2	SBL	SBT	SBR
Capacity (veh/h)	887	-	-	149	655	158	569	835	-	-
HCM Lane V/C Ratio	0.102	-	-	0.58	0.191	1.194	0.19	0.129	-	-
HCM Control Delay (s)	9.5	-	-	58.1	11.8	190.3	12.8	10	-	-
HCM Lane LOS	A	-	-	F	B	F	B	A	-	-
HCM 95th %tile Q(veh)	0.3	-	-	3	0.7	10.5	0.7	0.4	-	-

Notes

~: Volume exceeds capacity $: Delay exceeds 300s +: Computation Not Defined *: All major volume in platoon

Lane Group	EBL	EBT	EBR	WBL	WBT	WBR	NBL	NBT	NBR	SBL	SBT	SBR
Lane Configurations												
Volume (vph)	210	440	390	35	400	200	310	490	75	240	505	75
Ideal Flow (vphpl)	1900	1900	1900	1900	1900	1900	1900	1900	1900	1900	1900	1900
Lane Width (ft)	12	12	12	12	12	12	12	12	12	12	12	12
Grade (%)		0%			0%			0%			0%	
Storage Length (ft)	210		430	215		0	260		55	240		90
Storage Lanes	1		1	1		0	2		1	1		1
Taper Length (ft)	100			100			100			100		
Right Turn on Red			No			No			No			No
Link Speed (mph)		40			40			35			35	
Link Distance (ft)		2258			1339			1052			2325	
Travel Time (s)		38.5			22.8			20.5			45.3	
Confl. Peds. (#/hr)												
Confl. Bikes (#/hr)												
Peak Hour Factor	0.81	0.81	0.81	0.81	0.81	0.81	0.81	0.81	0.81	0.81	0.81	0.81
Growth Factor	100%	100%	50%	100%	100%	100%	100%	100%	50%	100%	100%	50%
Heavy Vehicles (%)	5%	5%	5%	5%	5%	5%	10%	10%	10%	7%	7%	7%
Bus Blockages (#/hr)	0	0	0	0	0	0	0	0	0	0	0	0
Parking (#/hr)												
Mid-Block Traffic (%)		0%			0%			0%			0%	
Shared Lane Traffic (%)												
Lane Group Flow (vph)	259	543	241	43	741	0	383	605	46	296	623	46
Turn Type	pm+pt	NA	Perm	pm+pt	NA		Prot	NA	Perm	Prot	NA	Perm
Protected Phases	7	4		3	8		1	6		5	2	
Permitted Phases	4		4	8					6			2
Detector Phase	7	4	4	3	8		1	6	6	5	2	2
Switch Phase												
Minimum Initial (s)	6.0	8.0	8.0	6.0	8.0		8.0	15.0	15.0	6.0	15.0	15.0
Minimum Split (s)	10.5	48.6	48.6	10.5	50.6		12.5	45.4	45.4	10.5	50.4	50.4
Total Split (s)	24.5	36.6	36.6	24.5	36.6		24.5	46.4	46.4	24.5	46.4	46.4
Total Split (%)	18.6%	27.7%	27.7%	18.6%	27.7%		18.6%	35.2%	35.2%	18.6%	35.2%	35.2%
Maximum Green (s)	20.0	30.0	30.0	20.0	30.0		20.0	40.0	40.0	20.0	40.0	40.0
Yellow Time (s)	3.5	4.0	4.0	3.5	4.0		3.5	3.9	3.9	3.5	3.9	3.9
All-Red Time (s)	1.0	2.6	2.6	1.0	2.6		1.0	2.5	2.5	1.0	2.5	2.5
Lost Time Adjust (s)	0.0	0.0	0.0	0.0	0.0		0.0	0.0	0.0	0.0	0.0	0.0
Total Lost Time (s)	4.5	6.6	6.6	4.5	6.6		4.5	6.4	6.4	4.5	6.4	6.4
Lead/Lag	Lead	Lag	Lag	Lead	Lag		Lead	Lag	Lag	Lead	Lag	Lag
Lead-Lag Optimize?												
Vehicle Extension (s)	1.5	1.5	1.5	1.5	1.5		1.5	4.3	4.3	1.5	3.4	3.4
Minimum Gap (s)	1.5	1.5	1.5	1.5	1.5		1.5	2.0	2.0	1.5	2.0	2.0
Time Before Reduce (s)	20.0	30.0	30.0	20.0	30.0		20.0	19.0	19.0	20.0	20.0	20.0
Time To Reduce (s)	0.0	0.0	0.0	0.0	0.0		0.0	21.0	21.0	0.0	20.0	20.0
Recall Mode	None	None	None	None	None		None	Min	Min	None	Min	Min
Walk Time (s)		7.0	7.0		7.0			7.0	7.0		7.0	7.0
Flash Dont Walk (s)		35.0	35.0		37.0			32.0	32.0		37.0	37.0
Pedestrian Calls (#/hr)		0	0		0			0	0		0	0
v/c Ratio	0.80	0.83	0.43	0.20	0.89		0.83	0.76	0.13	1.02	0.69	0.11
Control Delay	44.2	47.8	33.2	22.8	57.0		64.9	48.4	36.0	107.9	43.9	35.1
Queue Delay	0.0	0.0	0.0	0.0	0.0		0.0	0.0	0.0	0.0	0.0	0.0

Lane Group	EBL	EBT	EBR	WBL	WBT	WBR	NBL	NBT	NBR	SBL	SBT	SBR
Total Delay	44.2	47.8	33.2	22.8	57.0		64.9	48.4	36.0	107.9	43.9	35.1
Queue Length 50th (ft)	125	381	140	18	290		147	228	28	~246	230	27
Queue Length 95th (ft)	205	#532	213	39	#375		191	261	54	#398	267	54
Internal Link Dist (ft)		2178			1259			972			2245	
Turn Bay Length (ft)	210		430	215			260		55	240		90
Base Capacity (vph)	367	657	558	413	842		547	1128	504	289	1160	518
Starvation Cap Reductn	0	0	0	0	0		0	0	0	0	0	0
Spillback Cap Reductn	0	0	0	0	0		0	0	0	0	0	0
Storage Cap Reductn	0	0	0	0	0		0	0	0	0	0	0
Reduced v/c Ratio	0.71	0.83	0.43	0.10	0.88		0.70	0.54	0.09	1.02	0.54	0.09

Intersection Summary

Area Type: Other
Cycle Length: 132
Actuated Cycle Length: 117.1
Natural Cycle: 145
Control Type: Actuated-Uncoordinated
Description: Runs Free. PB all app. Ped interval reduced to max green for HCM output.

~ Volume exceeds capacity, queue is theoretically infinite.
Queue shown is maximum after two cycles.

95th percentile volume exceeds capacity, queue may be longer.
Queue shown is maximum after two cycles.

Splits and Phases: 200: STH 83/Rochester Street & CTH N

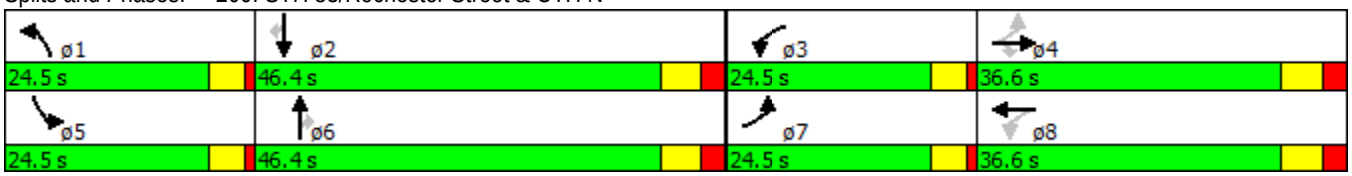

Movement	EBL	EBT	EBR	WBL	WBT	WBR	NBL	NBT	NBR	SBL	SBT	SBR
Lane Configurations												
Volume (veh/h)	210	440	390	35	400	200	310	490	75	240	505	75
Number	7	4	14	3	8	18	1	6	16	5	2	12
Initial Q (Qb), veh	0	0	0	0	0	0	0	0	0	0	0	0
Ped-Bike Adj(A_pbT)	1.00		1.00	1.00		1.00	1.00		1.00	1.00		1.00
Parking Bus, Adj	1.00	1.00	1.00	1.00	1.00	1.00	1.00	1.00	1.00	1.00	1.00	1.00
Adj Sat Flow, veh/h/ln	1810	1810	1810	1810	1810	1900	1727	1727	1727	1776	1776	1776
Adj Flow Rate, veh/h	259	543	241	43	494	247	383	605	46	296	623	46
Adj No. of Lanes	1	1	1	1	2	0	2	2	1	1	2	1
Peak Hour Factor	0.81	0.81	0.81	0.81	0.81	0.81	0.81	0.81	0.81	0.81	0.81	0.81
Percent Heavy Veh, %	5	5	5	5	5	5	10	10	10	7	7	7
Cap, veh/h	296	595	506	156	535	266	437	893	399	290	1035	463
Arrive On Green	0.13	0.33	0.33	0.04	0.24	0.24	0.14	0.27	0.27	0.17	0.31	0.31
Sat Flow, veh/h	1723	1810	1538	1723	2226	1108	3191	3282	1468	1691	3374	1509
Grp Volume(v), veh/h	259	543	241	43	381	360	383	605	46	296	623	46
Grp Sat Flow(s),veh/h/ln	1723	1810	1538	1723	1719	1614	1596	1641	1468	1691	1687	1509
Q Serve(g_s), s	12.7	33.5	14.5	2.1	25.2	25.4	13.7	19.2	2.7	20.0	18.3	2.5
Cycle Q Clear(g_c), s	12.7	33.5	14.5	2.1	25.2	25.4	13.7	19.2	2.7	20.0	18.3	2.5
Prop In Lane	1.00		1.00	1.00		0.69	1.00		1.00	1.00		1.00
Lane Grp Cap(c), veh/h	296	595	506	156	414	388	437	893	399	290	1035	463
V/C Ratio(X)	0.87	0.91	0.48	0.28	0.92	0.93	0.88	0.68	0.12	1.02	0.60	0.10
Avail Cap(c_a), veh/h	373	595	506	385	443	416	548	1127	504	290	1158	518
HCM Platoon Ratio	1.00	1.00	1.00	1.00	1.00	1.00	1.00	1.00	1.00	1.00	1.00	1.00
Upstream Filter(I)	1.00	1.00	1.00	1.00	1.00	1.00	1.00	1.00	1.00	1.00	1.00	1.00
Uniform Delay (d), s/veh	29.8	37.5	31.1	33.5	43.2	43.2	49.3	37.9	31.9	48.3	34.3	28.9
Incr Delay (d2), s/veh	14.7	18.1	0.3	0.4	23.0	25.1	10.9	1.6	0.2	58.0	0.8	0.1
Initial Q Delay(d3),s/veh	0.0	0.0	0.0	0.0	0.0	0.0	0.0	0.0	0.0	0.1	0.0	0.0
%ile BackOfQ(50%),veh/ln	7.2	19.7	6.2	1.0	14.6	14.0	6.7	8.9	1.1	13.9	8.6	1.1
LnGrp Delay(d),s/veh	44.4	55.6	31.4	33.9	66.2	68.4	60.2	39.5	32.1	106.3	35.2	29.0
LnGrp LOS	D	E	C	C	E	E	E	D	C	F	D	C
Approach Vol, veh/h		1043			784			1034			965	
Approach Delay, s/veh		47.2			65.4			46.8			56.7	
Approach LOS		D			E			D			E	

Timer	1	2	3	4	5	6	7	8
Assigned Phs	1	2	3	4	5	6	7	8
Phs Duration (G+Y+Rc), s	20.5	42.1	9.0	44.9	24.5	38.1	19.3	34.6
Change Period (Y+Rc), s	4.5	6.4	4.5	6.6	4.5	6.4	4.5	6.6
Max Green Setting (Gmax), s	20.0	40.0	20.0	30.0	20.0	40.0	20.0	30.0
Max Q Clear Time (g_c+I1), s	15.7	20.3	4.1	35.5	22.0	21.2	14.7	27.4
Green Ext Time (p_c), s	0.2	10.8	0.0	0.0	0.0	10.5	0.1	0.6

Intersection Summary	
HCM 2010 Ctrl Delay	53.2
HCM 2010 LOS	D

Notes

User approved pedestrian interval to be less than phase max green.

Lane Group	EBL	EBT	EBR	WBL	WBT	WBR	NBL	NBT	NBR	SBL	SBT	SBR
Lane Configurations												
Volume (vph)	5	685	35	90	655	40	65	1	275	80	1	10
Ideal Flow (vphpl)	1900	1900	1900	1900	1900	1900	1900	1900	1900	1900	1900	1900
Lane Width (ft)	12	12	12	12	12	12	12	12	12	12	12	12
Grade (%)		0%			0%			0%			0%	
Storage Length (ft)	200		0	100		0	0		100	0		0
Storage Lanes	1		0	1		0	0		1	0		0
Taper Length (ft)	100			100			100			100		
Right Turn on Red			No			No			No			No
Link Speed (mph)		40			40			25			25	
Link Distance (ft)		1050			2258			303			468	
Travel Time (s)		17.9			38.5			8.3			12.8	
Confl. Peds. (#/hr)												
Confl. Bikes (#/hr)												
Peak Hour Factor	0.72	0.72	0.72	0.72	0.72	0.72	0.72	0.72	0.72	0.72	0.72	0.72
Growth Factor	100%	100%	100%	100%	100%	100%	100%	100%	50%	100%	100%	100%
Heavy Vehicles (%)	2%	2%	2%	5%	5%	5%	12%	12%	12%	2%	2%	2%
Bus Blockages (#/hr)	0	0	0	0	0	0	0	0	0	0	0	0
Parking (#/hr)												
Mid-Block Traffic (%)		0%			0%			0%			0%	
Shared Lane Traffic (%)												
Lane Group Flow (vph)	7	1000	0	125	966	0	0	91	191	0	126	0
Turn Type	Perm	NA		pm+pt	NA		Perm	NA	Perm	Perm	NA	
Protected Phases		6		5	2			8			4	
Permitted Phases	6			2			8		8	4		
Detector Phase	6	6		5	2		8	8	8	4	4	
Switch Phase												
Minimum Initial (s)	15.0	15.0		6.0	7.0		6.0	6.0	6.0	6.0	6.0	
Minimum Split (s)	25.7	25.7		11.7	25.7		24.0	24.0	24.0	24.0	24.0	
Total Split (s)	65.7	65.7		30.7	65.7		34.0	34.0	34.0	34.0	34.0	
Total Split (%)	50.4%	50.4%		23.5%	50.4%		26.1%	26.1%	26.1%	26.1%	26.1%	
Maximum Green (s)	60.0	60.0		25.0	60.0		30.0	30.0	30.0	30.0	30.0	
Yellow Time (s)	4.5	4.5		4.5	4.5		3.0	3.0	3.0	3.0	3.0	
All-Red Time (s)	1.2	1.2		1.2	1.2		1.0	1.0	1.0	1.0	1.0	
Lost Time Adjust (s)	0.0	0.0		0.0	0.0			0.0	0.0		0.0	
Total Lost Time (s)	5.7	5.7		5.7	5.7			4.0	4.0		4.0	
Lead/Lag	Lag	Lag		Lead								
Lead-Lag Optimize?												
Vehicle Extension (s)	5.5	5.5		4.5	5.5		3.0	3.0	3.0	3.0	3.0	
Minimum Gap (s)	2.0	2.0		0.2	2.0		1.5	1.5	1.5	1.5	1.5	
Time Before Reduce (s)	0.0	0.0		0.0	0.0		0.0	0.0	0.0	0.0	0.0	
Time To Reduce (s)	0.0	0.0		0.0	0.0		0.0	0.0	0.0	0.0	0.0	
Recall Mode	Min	Min		None	Min		None	None	None	None	None	
Walk Time (s)	6.0	6.0			6.0		6.0	6.0	6.0	6.0	6.0	
Flash Dont Walk (s)	14.0	14.0			14.0		14.0	14.0	14.0	14.0	14.0	
Pedestrian Calls (#/hr)	0	0			0		0	0	0	0	0	
v/c Ratio	0.03	0.96		0.48	0.74			0.41	0.74		0.58	
Control Delay	14.6	45.2		21.8	14.2			44.9	59.1		51.4	
Queue Delay	0.0	0.0		0.0	0.0			0.0	0.0		0.0	

Lane Group	EBL	EBT	EBR	WBL	WBT	WBR	NBL	NBT	NBR	SBL	SBT	SBR
Total Delay	14.6	45.2		21.8	14.2			44.9	59.1		51.4	
Queue Length 50th (ft)	2	602		29	331			55	124		79	
Queue Length 95th (ft)	9	#776		67	412			86	162		114	
Internal Link Dist (ft)		970			2178			223			388	
Turn Bay Length (ft)	200			100					100			
Base Capacity (vph)	270	1039		456	1523			346	405		341	
Starvation Cap Reductn	0	0		0	0			0	0		0	
Spillback Cap Reductn	0	0		0	0			0	0		0	
Storage Cap Reductn	0	0		0	0			0	0		0	
Reduced v/c Ratio	0.03	0.96		0.27	0.63			0.26	0.47		0.37	

Intersection Summary

Area Type: Other
Cycle Length: 130.4
Actuated Cycle Length: 107.5
Natural Cycle: 90
Control Type: Actuated-Uncoordinated
Description: Runs Free. Ped PB. No Xwalks.
95th percentile volume exceeds capacity, queue may be longer.
Queue shown is maximum after two cycles.

Splits and Phases: 300: HS Dwy/Fairwinds Boulevard & CTH N

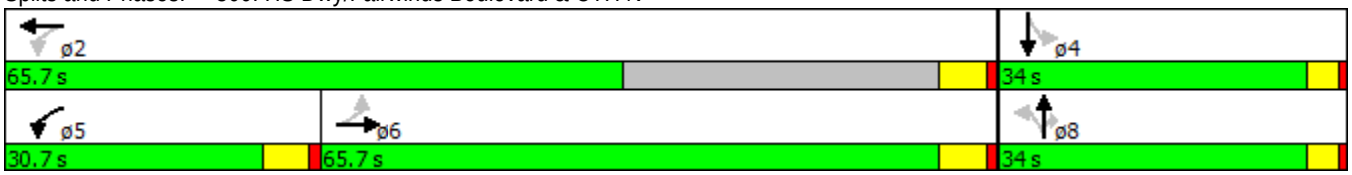

Movement	EBL	EBT	EBR	WBL	WBT	WBR	NBL	NBT	NBR	SBL	SBT	SBR
Lane Configurations												
Volume (veh/h)	5	685	35	90	655	40	65	1	275	80	1	10
Number	1	6	16	5	2	12	3	8	18	7	4	14
Initial Q (Qb), veh	0	0	0	0	0	0	0	0	0	0	0	0
Ped-Bike Adj(A_pbT)	1.00		1.00	1.00		1.00	1.00		1.00	1.00		1.00
Parking Bus, Adj	1.00	1.00	1.00	1.00	1.00	1.00	1.00	1.00	1.00	1.00	1.00	1.00
Adj Sat Flow, veh/h/ln	1863	1863	1900	1810	1810	1900	1900	1696	1696	1900	1863	1900
Adj Flow Rate, veh/h	7	951	49	125	910	56	90	1	191	111	1	14
Adj No. of Lanes	1	1	0	1	1	0	0	1	1	0	1	0
Peak Hour Factor	0.72	0.72	0.72	0.72	0.72	0.72	0.72	0.72	0.72	0.72	0.72	0.72
Percent Heavy Veh, %	2	2	2	5	5	5	12	12	12	2	2	2
Cap, veh/h	289	1026	53	235	1194	73	346	3	271	219	6	19
Arrive On Green	0.58	0.58	0.58	0.06	0.71	0.71	0.19	0.19	0.19	0.19	0.19	0.19
Sat Flow, veh/h	579	1756	90	1723	1687	104	1430	18	1442	776	32	101
Grp Volume(v), veh/h	7	0	1000	125	0	966	91	0	191	126	0	0
Grp Sat Flow(s),veh/h/ln	579	0	1847	1723	0	1791	1448	0	1442	910	0	0
Q Serve(g_s), s	0.7	0.0	45.6	2.4	0.0	31.7	0.0	0.0	11.5	8.8	0.0	0.0
Cycle Q Clear(g_c), s	21.0	0.0	45.6	2.4	0.0	31.7	4.9	0.0	11.5	13.6	0.0	0.0
Prop In Lane	1.00		0.05	1.00		0.06	0.99		1.00	0.88		0.11
Lane Grp Cap(c), veh/h	289	0	1079	235	0	1268	349	0	271	244	0	0
V/C Ratio(X)	0.02	0.00	0.93	0.53	0.00	0.76	0.26	0.00	0.71	0.52	0.00	0.00
Avail Cap(c_a), veh/h	326	0	1195	593	0	1268	522	0	466	410	0	0
HCM Platoon Ratio	1.00	1.00	1.00	1.00	1.00	1.00	1.00	1.00	1.00	1.00	1.00	1.00
Upstream Filter(I)	1.00	0.00	1.00	1.00	0.00	1.00	1.00	0.00	1.00	1.00	0.00	0.00
Uniform Delay (d), s/veh	18.9	0.0	17.5	20.8	0.0	8.6	32.6	0.0	35.3	38.1	0.0	0.0
Incr Delay (d2), s/veh	0.1	0.0	13.1	3.2	0.0	3.6	0.4	0.0	3.4	1.7	0.0	0.0
Initial Q Delay(d3),s/veh	0.0	0.0	0.0	0.0	0.0	0.0	0.0	0.0	0.0	0.0	0.0	0.0
%ile BackOfQ(50%),veh/ln	0.1	0.0	27.0	2.2	0.0	16.5	2.1	0.0	4.8	3.2	0.0	0.0
LnGrp Delay(d),s/veh	19.0	0.0	30.6	23.9	0.0	12.2	33.0	0.0	38.6	39.8	0.0	0.0
LnGrp LOS	B		C	C		B	C		D	D		
Approach Vol, veh/h		1007			1091			282			126	
Approach Delay, s/veh		30.5			13.5			36.8			39.8	
Approach LOS		C			B			D			D	

Timer	1	2	3	4	5	6	7	8
Assigned Phs		2		4	5	6		8
Phs Duration (G+Y+Rc), s		71.4		21.4	11.5	59.9		21.4
Change Period (Y+Rc), s		* 5.7		4.0	* 5.7	* 5.7		4.0
Max Green Setting (Gmax), s		* 60		30.0	* 25	* 60		30.0
Max Q Clear Time (g_c+I1), s		33.7		15.6	4.4	47.6		13.5
Green Ext Time (p_c), s		24.6		1.8	0.6	6.6		1.9

Intersection Summary	
HCM 2010 Ctrl Delay	24.3
HCM 2010 LOS	C

Notes

* HCM 2010 computational engine requires equal clearance times for the phases crossing the barrier.

Lane Group	EBL	EBT	EBR	WBL	WBT	WBR	NBL	NBT	NBR	SBL	SBT	SBR
Lane Configurations												
Volume (vph)	85	1	120	180	1	85	120	695	145	95	745	85
Ideal Flow (vphpl)	1900	1900	1900	1900	1900	1900	1900	1900	1900	1900	1900	1900
Lane Width (ft)	12	12	12	12	12	12	12	12	12	12	12	12
Grade (%)		0%			0%			0%			0%	
Storage Length (ft)	0		100	0		0	340		225	390		0
Storage Lanes	0		1	0		1	1		1	1		0
Taper Length (ft)	100			100			100			100		
Link Speed (mph)		30			25			35			35	
Link Distance (ft)		527			580			2325			691	
Travel Time (s)		12.0			15.8			45.3			13.5	
Confl. Peds. (#/hr)												
Confl. Bikes (#/hr)												
Peak Hour Factor	0.92	0.92	0.92	0.92	0.92	0.92	0.92	0.92	0.92	0.92	0.92	0.92
Growth Factor	100%	100%	100%	100%	100%	100%	100%	100%	100%	100%	100%	100%
Heavy Vehicles (%)	2%	2%	2%	2%	2%	2%	3%	3%	3%	4%	4%	4%
Bus Blockages (#/hr)	0	0	0	0	0	0	0	0	0	0	0	0
Parking (#/hr)												
Mid-Block Traffic (%)		0%			0%			0%			0%	
Shared Lane Traffic (%)												
Lane Group Flow (vph)	0	93	130	0	197	92	130	755	158	103	902	0
Sign Control		Stop			Stop			Free			Free	

Intersection Summary	
Area Type:	Other
Control Type: Unsignalized	

Intersection	
Int Delay, s/veh	31.4

Movement	EBL	EBT	EBR	WBL	WBT	WBR	NBL	NBT	NBR	SBL	SBT	SBR
Vol, veh/h	85	1	120	180	1	85	120	695	145	95	745	85
Conflicting Peds, #/hr	0	0	0	0	0	0	0	0	0	0	0	0
Sign Control	Stop	Stop	Stop	Stop	Stop	Stop	Free	Free	Free	Free	Free	Free
RT Channelized	-	-	None	-	-	None	-	-	None	-	-	None
Storage Length	-	-	100	-	-	0	340	-	225	390	-	-
Veh in Median Storage, #	-	1	-	-	2	-	-	0	-	-	0	-
Grade, %	-	0	-	-	0	-	-	0	-	-	0	-
Peak Hour Factor	92	92	92	92	92	92	92	92	92	92	92	92
Heavy Vehicles, %	2	2	2	2	2	2	3	3	3	4	4	4
Mvmt Flow	92	1	130	196	1	92	130	755	158	103	810	92

Major/Minor	Minor2			Minor1			Major1			Major2		
Conflicting Flow All	1702	2079	451	1628	2125	378	902	0	0	755	0	0
Stage 1	1063	1063	-	1016	1016	-	-	-	-	-	-	-
Stage 2	639	1016	-	612	1109	-	-	-	-	-	-	-
Critical Hdwy	7.54	6.54	6.94	7.54	6.54	6.94	4.16	-	-	4.18	-	-
Critical Hdwy Stg 1	6.54	5.54	-	6.54	5.54	-	-	-	-	-	-	-
Critical Hdwy Stg 2	6.54	5.54	-	6.54	5.54	-	-	-	-	-	-	-
Follow-up Hdwy	3.52	4.02	3.32	3.52	4.02	3.32	2.23	-	-	2.24	-	-
Pot Cap-1 Maneuver	~ 59	53	556	~ 68	49	620	743	-	-	838	-	-
Stage 1	238	298	-	255	314	-	-	-	-	-	-	-
Stage 2	431	314	-	447	283	-	-	-	-	-	-	-
Platoon blocked, %								-	-		-	-
Mov Cap-1 Maneuver	~ 39	38	556	~ 41	35	620	743	-	-	838	-	-
Mov Cap-2 Maneuver	108	105	-	~ 131	105	-	-	-	-	-	-	-
Stage 1	196	261	-	210	259	-	-	-	-	-	-	-
Stage 2	301	259	-	299	248	-	-	-	-	-	-	-

Approach	EB	WB	NB	SB
HCM Control Delay, s	60.4	223.1	1.4	1
HCM LOS	F	F		

Minor Lane/Major Mvmt	NBL	NBT	NBR	EBLn1	EBLn2	WBLn1	WBLn2	SBL	SBT	SBR
Capacity (veh/h)	743	-	-	108	556	131	620	838	-	-
HCM Lane V/C Ratio	0.176	-	-	0.866	0.235	1.502	0.149	0.123	-	-
HCM Control Delay (s)	10.9	-	-	126	13.4	$ 322.4	11.8	9.9	-	-
HCM Lane LOS	B	-	-	F	B	F	B	A	-	-
HCM 95th %tile Q(veh)	0.6	-	-	5.1	0.9	13.6	0.5	0.4	-	-

Notes

~: Volume exceeds capacity $: Delay exceeds 300s +: Computation Not Defined *: All major volume in platoon

Lane Group	EBL	EBT	EBR	WBL	WBT	WBR	NBL	NBT	NBR	SBL	SBT	SBR
Lane Configurations												
Volume (vph)	135	285	330	100	415	250	400	575	80	230	595	220
Ideal Flow (vphpl)	1900	1900	1900	1900	1900	1900	1900	1900	1900	1900	1900	1900
Lane Width (ft)	12	12	12	12	12	12	12	12	12	12	12	12
Grade (%)		0%			0%			0%			0%	
Storage Length (ft)	210		430	215		0	260		55	240		90
Storage Lanes	1		1	1		0	2		1	1		1
Taper Length (ft)	100			100			100			100		
Right Turn on Red			No			No			No			No
Link Speed (mph)		40			40			35			35	
Link Distance (ft)		2258			1339			1052			2325	
Travel Time (s)		38.5			22.8			20.5			45.3	
Confl. Peds. (#/hr)												
Confl. Bikes (#/hr)												
Peak Hour Factor	0.93	0.93	0.93	0.93	0.93	0.93	0.93	0.93	0.93	0.93	0.93	0.93
Growth Factor	100%	100%	50%	100%	100%	100%	100%	100%	50%	100%	100%	50%
Heavy Vehicles (%)	3%	3%	3%	1%	1%	1%	2%	2%	2%	3%	3%	3%
Bus Blockages (#/hr)	0	0	0	0	0	0	0	0	0	0	0	0
Parking (#/hr)												
Mid-Block Traffic (%)		0%			0%			0%			0%	
Shared Lane Traffic (%)												
Lane Group Flow (vph)	145	306	177	108	715	0	430	618	43	247	640	118
Turn Type	pm+pt	NA	Perm	pm+pt	NA		Prot	NA	Perm	Prot	NA	Perm
Protected Phases	7	4		3	8		1	6		5	2	
Permitted Phases	4		4	8					6			2
Detector Phase	7	4	4	3	8		1	6	6	5	2	2
Switch Phase												
Minimum Initial (s)	6.0	8.0	8.0	6.0	8.0		8.0	15.0	15.0	6.0	15.0	15.0
Minimum Split (s)	10.5	48.6	48.6	10.5	50.6		12.5	45.4	45.4	10.5	50.4	50.4
Total Split (s)	24.5	36.6	36.6	24.5	36.6		24.5	46.4	46.4	24.5	46.4	46.4
Total Split (%)	18.6%	27.7%	27.7%	18.6%	27.7%		18.6%	35.2%	35.2%	18.6%	35.2%	35.2%
Maximum Green (s)	20.0	30.0	30.0	20.0	30.0		20.0	40.0	40.0	20.0	40.0	40.0
Yellow Time (s)	3.5	4.0	4.0	3.5	4.0		3.5	3.9	3.9	3.5	3.9	3.9
All-Red Time (s)	1.0	2.6	2.6	1.0	2.6		1.0	2.5	2.5	1.0	2.5	2.5
Lost Time Adjust (s)	0.0	0.0	0.0	0.0	0.0		0.0	0.0	0.0	0.0	0.0	0.0
Total Lost Time (s)	4.5	6.6	6.6	4.5	6.6		4.5	6.4	6.4	4.5	6.4	6.4
Lead/Lag	Lead	Lag	Lag	Lead	Lag		Lead	Lag	Lag	Lead	Lag	Lag
Lead-Lag Optimize?												
Vehicle Extension (s)	1.5	1.5	1.5	1.5	1.5		1.5	4.3	4.3	1.5	3.4	3.4
Minimum Gap (s)	1.5	1.5	1.5	1.5	1.5		1.5	2.0	2.0	1.5	2.0	2.0
Time Before Reduce (s)	20.0	30.0	30.0	20.0	30.0		20.0	19.0	19.0	20.0	20.0	20.0
Time To Reduce (s)	0.0	0.0	0.0	0.0	0.0		0.0	21.0	21.0	0.0	20.0	20.0
Recall Mode	None	None	None	None	None		None	Min	Min	None	Min	Min
Walk Time (s)		7.0	7.0		7.0			7.0	7.0		7.0	7.0
Flash Dont Walk (s)		35.0	35.0		37.0			32.0	32.0		37.0	37.0
Pedestrian Calls (#/hr)		0	0		0			0	0		0	0
v/c Ratio	0.54	0.60	0.41	0.30	0.84		0.77	0.70	0.11	0.78	0.68	0.28
Control Delay	28.1	39.7	35.7	22.4	48.0		53.7	41.1	32.8	61.0	39.4	34.3
Queue Delay	0.0	0.0	0.0	0.0	0.0		0.0	0.0	0.0	0.0	0.0	0.0

Lane Group	EBL	EBT	EBR	WBL	WBT	WBR	NBL	NBT	NBR	SBL	SBT	SBR
Total Delay	28.1	39.7	35.7	22.4	48.0		53.7	41.1	32.8	61.0	39.4	34.3
Queue Length 50th (ft)	60	177	96	44	240		146	205	23	161	208	65
Queue Length 95th (ft)	117	308	184	90	#383		227	285	55	#336	297	125
Internal Link Dist (ft)		2178			1259			972			2245	
Turn Bay Length (ft)	210		430	215			260		55	240		90
Base Capacity (vph)	409	565	480	531	987		669	1380	617	341	1367	611
Starvation Cap Reductn	0	0	0	0	0		0	0	0	0	0	0
Spillback Cap Reductn	0	0	0	0	0		0	0	0	0	0	0
Storage Cap Reductn	0	0	0	0	0		0	0	0	0	0	0
Reduced v/c Ratio	0.35	0.54	0.37	0.20	0.72		0.64	0.45	0.07	0.72	0.47	0.19

Intersection Summary

Area Type: Other
Cycle Length: 132
Actuated Cycle Length: 104.5
Natural Cycle: 125
Control Type: Actuated-Uncoordinated
Description: Runs Free. PB all app. Ped interval reduced to max green for HCM output.
95th percentile volume exceeds capacity, queue may be longer.
Queue shown is maximum after two cycles.

Splits and Phases: 200: STH 83/Rochester Street & CTH N

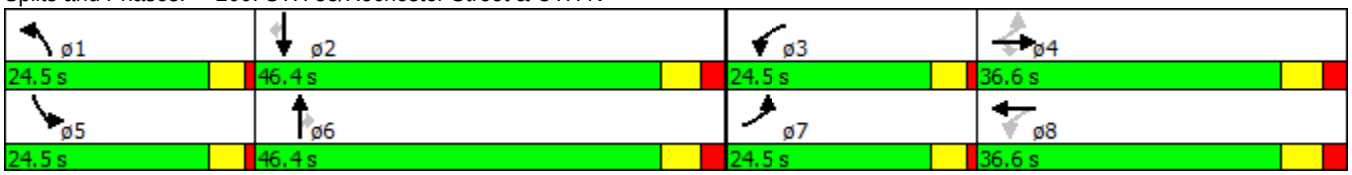

Movement	EBL	EBT	EBR	WBL	WBT	WBR	NBL	NBT	NBR	SBL	SBT	SBR
Lane Configurations												
Volume (veh/h)	135	285	330	100	415	250	400	575	80	230	595	220
Number	7	4	14	3	8	18	1	6	16	5	2	12
Initial Q (Qb), veh	0	0	0	0	0	0	0	0	0	0	0	0
Ped-Bike Adj(A_pbT)	1.00		1.00	1.00		1.00	1.00		1.00	1.00		1.00
Parking Bus, Adj	1.00	1.00	1.00	1.00	1.00	1.00	1.00	1.00	1.00	1.00	1.00	1.00
Adj Sat Flow, veh/h/ln	1845	1845	1845	1881	1881	1900	1863	1863	1863	1845	1845	1845
Adj Flow Rate, veh/h	145	306	177	108	446	269	430	618	43	247	640	118
Adj No. of Lanes	1	1	1	1	2	0	2	2	1	1	2	1
Peak Hour Factor	0.93	0.93	0.93	0.93	0.93	0.93	0.93	0.93	0.93	0.93	0.93	0.93
Percent Heavy Veh, %	3	3	3	1	1	1	2	2	2	3	3	3
Cap, veh/h	245	482	410	289	523	313	501	1046	468	279	1082	484
Arrive On Green	0.08	0.26	0.26	0.06	0.24	0.24	0.15	0.30	0.30	0.16	0.31	0.31
Sat Flow, veh/h	1757	1845	1568	1792	2152	1289	3442	3539	1583	1757	3505	1568
Grp Volume(v), veh/h	145	306	177	108	370	345	430	618	43	247	640	118
Grp Sat Flow(s),veh/h/ln	1757	1845	1568	1792	1787	1654	1721	1770	1583	1757	1752	1568
Q Serve(g_s), s	6.0	14.5	9.3	4.4	19.5	19.8	12.1	14.7	1.9	13.6	15.3	5.6
Cycle Q Clear(g_c), s	6.0	14.5	9.3	4.4	19.5	19.8	12.1	14.7	1.9	13.6	15.3	5.6
Prop In Lane	1.00		1.00	1.00		0.78	1.00		1.00	1.00		1.00
Lane Grp Cap(c), veh/h	245	482	410	289	434	402	501	1046	468	279	1082	484
V/C Ratio(X)	0.59	0.63	0.43	0.37	0.85	0.86	0.86	0.59	0.09	0.89	0.59	0.24
Avail Cap(c_a), veh/h	459	560	476	540	542	502	696	1431	640	355	1417	634
HCM Platoon Ratio	1.00	1.00	1.00	1.00	1.00	1.00	1.00	1.00	1.00	1.00	1.00	1.00
Upstream Filter(I)	1.00	1.00	1.00	1.00	1.00	1.00	1.00	1.00	1.00	1.00	1.00	1.00
Uniform Delay (d), s/veh	27.1	32.4	30.4	26.3	35.7	35.8	41.3	29.7	25.2	40.7	28.9	25.6
Incr Delay (d2), s/veh	0.8	1.1	0.3	0.3	8.7	10.0	5.9	0.8	0.1	16.7	0.6	0.3
Initial Q Delay(d3),s/veh	0.0	0.0	0.0	0.0	0.0	0.0	0.0	0.0	0.0	0.0	0.0	0.0
%ile BackOfQ(50%),veh/ln	2.9	7.5	4.1	2.2	10.7	10.1	6.1	7.3	0.9	7.9	7.5	2.4
LnGrp Delay(d),s/veh	28.0	33.4	30.7	26.6	44.5	45.9	47.1	30.6	25.4	57.4	29.5	25.9
LnGrp LOS	C	C	C	C	D	D	D	C	C	E	C	C
Approach Vol, veh/h		628			823			1091			1005	
Approach Delay, s/veh		31.4			42.7			36.9			35.9	
Approach LOS		C			D			D			D	

Timer	1	2	3	4	5	6	7	8
Assigned Phs	1	2	3	4	5	6	7	8
Phs Duration (G+Y+Rc), s	18.9	36.9	10.6	32.4	20.2	35.6	12.5	30.6
Change Period (Y+Rc), s	4.5	6.4	4.5	6.6	4.5	6.4	4.5	6.6
Max Green Setting (Gmax), s	20.0	40.0	20.0	30.0	20.0	40.0	20.0	30.0
Max Q Clear Time (g_c+I1), s	14.1	17.3	6.4	16.5	15.6	16.7	8.0	21.8
Green Ext Time (p_c), s	0.3	12.3	0.1	2.8	0.1	12.5	0.1	2.3

Intersection Summary	
HCM 2010 Ctrl Delay	37.0
HCM 2010 LOS	D

Notes

User approved pedestrian interval to be less than phase max green.

Lane Group	EBL	EBT	EBR	WBL	WBT	WBR	NBL	NBT	NBR	SBL	SBT	SBR
Lane Configurations												
Volume (vph)	20	590	10	15	935	85	35	1	90	70	1	10
Ideal Flow (vphpl)	1900	1900	1900	1900	1900	1900	1900	1900	1900	1900	1900	1900
Lane Width (ft)	12	12	12	12	12	12	12	12	12	12	12	12
Grade (%)		0%			0%			0%			0%	
Storage Length (ft)	200		0	100		0	0		100	0		0
Storage Lanes	1		0	1		0	0		1	0		0
Taper Length (ft)	100			100			100			100		
Right Turn on Red			No			No			No			No
Link Speed (mph)		40			40			25			25	
Link Distance (ft)		1050			2258			303			468	
Travel Time (s)		17.9			38.5			8.3			12.8	
Confl. Peds. (#/hr)												
Confl. Bikes (#/hr)												
Peak Hour Factor	0.91	0.91	0.91	0.91	0.91	0.91	0.91	0.91	0.91	0.91	0.91	0.91
Growth Factor	100%	100%	100%	100%	100%	100%	100%	100%	50%	100%	100%	100%
Heavy Vehicles (%)	3%	3%	3%	1%	1%	1%	1%	1%	1%	5%	5%	5%
Bus Blockages (#/hr)	0	0	0	0	0	0	0	0	0	0	0	0
Parking (#/hr)												
Mid-Block Traffic (%)		0%			0%			0%			0%	
Shared Lane Traffic (%)												
Lane Group Flow (vph)	22	659	0	16	1120	0	0	39	49	0	89	0
Turn Type	Perm	NA		pm+pt	NA		Perm	NA	Perm	Perm	NA	
Protected Phases		6		5	2			8			4	
Permitted Phases	6			2			8		8	4		
Detector Phase	6	6		5	2		8	8	8	4	4	
Switch Phase												
Minimum Initial (s)	15.0	15.0		6.0	7.0		6.0	6.0	6.0	6.0	6.0	
Minimum Split (s)	25.7	25.7		11.7	25.7		24.0	24.0	24.0	24.0	24.0	
Total Split (s)	65.7	65.7		30.7	65.7		34.0	34.0	34.0	34.0	34.0	
Total Split (%)	50.4%	50.4%		23.5%	50.4%		26.1%	26.1%	26.1%	26.1%	26.1%	
Maximum Green (s)	60.0	60.0		25.0	60.0		30.0	30.0	30.0	30.0	30.0	
Yellow Time (s)	4.5	4.5		4.5	4.5		3.0	3.0	3.0	3.0	3.0	
All-Red Time (s)	1.2	1.2		1.2	1.2		1.0	1.0	1.0	1.0	1.0	
Lost Time Adjust (s)	0.0	0.0		0.0	0.0			0.0	0.0		0.0	
Total Lost Time (s)	5.7	5.7		5.7	5.7			4.0	4.0		4.0	
Lead/Lag	Lag	Lag		Lead								
Lead-Lag Optimize?												
Vehicle Extension (s)	5.5	5.5		4.5	5.5		3.0	3.0	3.0	3.0	3.0	
Minimum Gap (s)	2.0	2.0		0.2	2.0		1.5	1.5	1.5	1.5	1.5	
Time Before Reduce (s)	0.0	0.0		0.0	0.0		0.0	0.0	0.0	0.0	0.0	
Time To Reduce (s)	0.0	0.0		0.0	0.0		0.0	0.0	0.0	0.0	0.0	
Recall Mode	Min	Min		None	Min		None	None	None	None	None	
Walk Time (s)	6.0	6.0			6.0		6.0	6.0	6.0	6.0	6.0	
Flash Dont Walk (s)	14.0	14.0			14.0		14.0	14.0	14.0	14.0	14.0	
Pedestrian Calls (#/hr)	0	0			0		0	0	0	0	0	
v/c Ratio	0.09	0.48		0.03	0.77			0.19	0.21		0.47	
Control Delay	7.6	8.3		3.6	12.4			33.3	33.4		40.7	
Queue Delay	0.0	0.0		0.0	0.0			0.0	0.0		0.0	

Lane Group	EBL	EBT	EBR	WBL	WBT	WBR	NBL	NBT	NBR	SBL	SBT	SBR
Total Delay	7.6	8.3		3.6	12.4			33.3	33.4		40.7	
Queue Length 50th (ft)	2	103		2	283			18	22		42	
Queue Length 95th (ft)	18	359		7	644			48	56		92	
Internal Link Dist (ft)		970			2178			223			388	
Turn Bay Length (ft)	200			100					100			
Base Capacity (vph)	264	1471		855	1854			581	652		527	
Starvation Cap Reductn	0	0		0	0			0	0		0	
Spillback Cap Reductn	0	0		0	0			0	0		0	
Storage Cap Reductn	0	0		0	0			0	0		0	
Reduced v/c Ratio	0.08	0.45		0.02	0.60			0.07	0.08		0.17	

Intersection Summary

Area Type: Other
Cycle Length: 130.4
Actuated Cycle Length: 75.9
Natural Cycle: 90
Control Type: Actuated-Uncoordinated
Description: Runs Free. Ped PB. No Xwalks.

Splits and Phases: 300: HS Dwy/Fairwinds Boulevard & CTH N

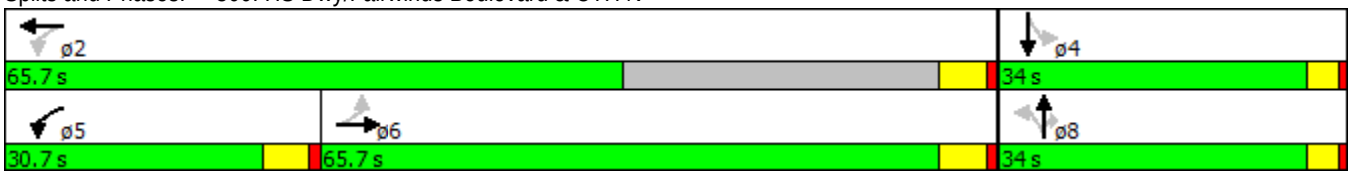

Movement	EBL	EBT	EBR	WBL	WBT	WBR	NBL	NBT	NBR	SBL	SBT	SBR
Lane Configurations												
Volume (veh/h)	20	590	10	15	935	85	35	1	90	70	1	10
Number	1	6	16	5	2	12	3	8	18	7	4	14
Initial Q (Qb), veh	0	0	0	0	0	0	0	0	0	0	0	0
Ped-Bike Adj(A_pbT)	1.00		1.00	1.00		1.00	1.00		1.00	1.00		1.00
Parking Bus, Adj	1.00	1.00	1.00	1.00	1.00	1.00	1.00	1.00	1.00	1.00	1.00	1.00
Adj Sat Flow, veh/h/ln	1845	1845	1900	1881	1881	1900	1900	1881	1881	1900	1810	1900
Adj Flow Rate, veh/h	22	648	11	16	1027	93	38	1	49	77	1	11
Adj No. of Lanes	1	1	0	1	1	0	0	1	1	0	1	0
Peak Hour Factor	0.91	0.91	0.91	0.91	0.91	0.91	0.91	0.91	0.91	0.91	0.91	0.91
Percent Heavy Veh, %	3	3	3	1	1	1	1	1	1	5	5	5
Cap, veh/h	292	1215	21	511	1301	118	265	6	181	191	7	16
Arrive On Green	0.67	0.67	0.67	0.02	0.77	0.77	0.11	0.11	0.11	0.11	0.11	0.11
Sat Flow, veh/h	496	1809	31	1792	1700	154	1554	52	1599	944	66	142
Grp Volume(v), veh/h	22	0	659	16	0	1120	39	0	49	89	0	0
Grp Sat Flow(s),veh/h/ln	496	0	1839	1792	0	1854	1606	0	1599	1152	0	0
Q Serve(g_s), s	2.2	0.0	14.7	0.2	0.0	28.6	0.0	0.0	2.2	4.7	0.0	0.0
Cycle Q Clear(g_c), s	23.3	0.0	14.7	0.2	0.0	28.6	1.7	0.0	2.2	6.4	0.0	0.0
Prop In Lane	1.00		0.02	1.00		0.08	0.97		1.00	0.87		0.12
Lane Grp Cap(c), veh/h	292	0	1235	511	0	1419	271	0	181	214	0	0
V/C Ratio(X)	0.08	0.00	0.53	0.03	0.00	0.79	0.14	0.00	0.27	0.41	0.00	0.00
Avail Cap(c_a), veh/h	331	0	1380	1031	0	1419	642	0	600	565	0	0
HCM Platoon Ratio	1.00	1.00	1.00	1.00	1.00	1.00	1.00	1.00	1.00	1.00	1.00	1.00
Upstream Filter(I)	1.00	0.00	1.00	1.00	0.00	1.00	1.00	0.00	1.00	1.00	0.00	0.00
Uniform Delay (d), s/veh	14.7	0.0	6.7	5.0	0.0	5.6	32.2	0.0	32.4	34.8	0.0	0.0
Incr Delay (d2), s/veh	0.3	0.0	1.0	0.0	0.0	3.8	0.2	0.0	0.8	1.3	0.0	0.0
Initial Q Delay(d3),s/veh	0.0	0.0	0.0	0.0	0.0	0.0	0.0	0.0	0.0	0.0	0.0	0.0
%ile BackOfQ(50%),veh/ln	0.3	0.0	7.7	0.1	0.0	15.5	0.8	0.0	1.0	2.0	0.0	0.0
LnGrp Delay(d),s/veh	15.0	0.0	7.7	5.0	0.0	9.3	32.4	0.0	33.2	36.1	0.0	0.0
LnGrp LOS	B		A	A		A	C		C	D		
Approach Vol, veh/h		681			1136			88			89	
Approach Delay, s/veh		7.9			9.3			32.9			36.1	
Approach LOS		A			A			C			D	

Timer	1	2	3	4	5	6	7	8
Assigned Phs		2		4	5	6		8
Phs Duration (G+Y+Rc), s		66.9		13.1	7.5	59.4		13.1
Change Period (Y+Rc), s		* 5.7		4.0	* 5.7	* 5.7		4.0
Max Green Setting (Gmax), s		* 60		30.0	* 25	* 60		30.0
Max Q Clear Time (g_c+I1), s		30.6		8.4	2.2	25.3		4.2
Green Ext Time (p_c), s		26.5		0.8	0.0	28.4		0.9

Intersection Summary	
HCM 2010 Ctrl Delay	11.1
HCM 2010 LOS	B

Notes

* HCM 2010 computational engine requires equal clearance times for the phases crossing the barrier.

ROUNDABOUT REPORT

General Information		Site Information	
Analyst	*TSC*	Intersection	*STH 83/Black Bear Blvd.*
Agency or Co.	*TADI*	E/W Street Name	*Black Bear Boulevard*
Date Performed	*11/23/2015*	N/S Street Name	
Time Period	*AM Peak Hour*	Analysis Year	*2026 Total*
Peak Hour Factor	*0.88*	Project ID	*Chapman Property TIA - ICE Report*

Project Description:

Volume Adjustment and Site Characteristics

	EB				WB				NB				SB			
	L	T	R	U	L	T	R	U	L	T	R	U	L	T	R	U
Number of Lanes (N)	*0*	*1*	*0*		*0*	*1*	*0*		*0*	*2*	*0*		*0*	*2*	*0*	
Lane Assignment			*LTR*				*LTR*		*LT*		*TR*		*LT*		*TR*	
Right-Turn Bypass	*None*				None				None				None			
Conflicting Lanes	*2*				2				1				1			
Volume (V), veh/h	*75*	*1*	*110*	*0*	*165*	*1*	*95*	*0*	*80*	*645*	*175*	*0*	*95*	*545*	*55*	*0*
Heavy Veh. Adj. (f_{HV}), %	*2*	*2*	*2*	*3*	*25*	*25*	*25*	*3*	*5*	*5*	*5*	*3*	*7*	*7*	*7*	*3*
Pedestrians Crossing	*0*				0				0				0			

Critical and Follow-Up Headway Adjustment

	EB			WB			NB			SB		
	Left	Right	Bypass	Left	Right	Bypass	Left	Right	Bypass	Left	Right	Bypass
Critical Headway (sec)	*4.2929*	*4.0000*	*5.1929*	*4.2929*	*4.0000*	*5.1929*	*4.2000*	*4.2000*	*5.1929*	*4.2000*	*4.2000*	*5.1929*
Follow-Up Headway (sec)	*3.1858*	*2.8000*		*3.1858*	*2.8000*		*2.8000*	*2.8000*		*2.8000*	*2.8000*	

Flow Computations

	EB			WB			NB			SB		
	Left	Right	Bypass	Left	Right	Bypass	Left	Right	Bypass	Left	Right	Bypass
Circulating Flow (V_c), pc/h	*1013*			*952*			*204*			*330*		
Exiting Flow (V_{ex}), pc/h	*325*			*164*			*991*			*1025*		
Entry Flow (V_e), pc/h		*216*			*371*		*505*	*569*		*397*	*448*	
Entry Volume veh/h		*212*			*297*		*481*	*542*		*371*	*419*	

Capacity and v/c Ratios

	EB			WB			NB			SB		
	Left	Right	Bypass	Left	Right	Bypass	Left	Right	Bypass	Left	Right	Bypass
Capacity (c_{PCE}), pc/h		*619*			*646*		*1097*	*1097*		*994*	*994*	
Capacity (*c*), veh/h		*607*			*517*		*1045*	*1045*		*929*	*929*	
v/c Ratio (X)		*0.35*			*0.57*		*0.46*	*0.52*		*0.40*	*0.45*	

Delay and Level of Service

	EB			WB			NB			SB		
	Left	Right	Bypass	Left	Right	Bypass	Left	Right	Bypass	Left	Right	Bypass
Lane Control Delay (d), s/veh		*10.8*			*18.8*		*8.6*	*9.7*		*8.4*	*9.3*	
Lane LOS		*B*			*C*		*A*	*A*		*A*	*A*	
Lane 95% Queue		*1.6*			*3.6*		*2.5*	*3.1*		*1.9*	*2.4*	
Approach Delay, s/veh	*10.82*			*18.80*			*9.20*			*8.87*		
Approach LOS, s/veh	*B*			*C*			*A*			*A*		
Intersection Delay, s/veh	*10.46*											
Intersection LOS	*B*											

Copyright © 2015 University of Florida, All Rights Reserved *HCS 2010*™ 6.70 Roundabouts Generated: 12/9/2015 1:57 PM

ROUNDABOUT REPORT

General Information		Site Information	
Analyst	*TSC*	Intersection	*STH 83/Black Bear Blvd.*
Agency or Co.	*TADI*	E/W Street Name	*Black Bear Boulevard*
Date Performed	*11/23/2015*	N/S Street Name	*STH 83*
Time Period	*PM Peak Hour*	Analysis Year	*2026 Total*
Peak Hour Factor	*0.92*	Project ID	*Chapman Property TIA - ICE Report*

Project Description:

Volume Adjustment and Site Characteristics

	EB				WB				NB				SB			
	L	T	R	U	L	T	R	U	L	T	R	U	L	T	R	U
Number of Lanes (N)	*0*	*1*	*0*		*0*	*1*	*0*		*0*	*2*	*0*		*0*	*2*	*0*	
Lane Assignment			*LTR*				*LTR*		*LT*		*TR*		*LT*		*TR*	
Right-Turn Bypass	*None*				None				None				None			
Conflicting Lanes	*2*				2				1				1			
Volume (V), veh/h	*85*	*1*	*120*	*0*	*180*	*1*	*85*	*0*	*120*	*695*	*145*	*0*	*95*	*745*	*85*	*0*
Heavy Veh. Adj. (f_{HV}), %	*2*	*2*	*2*	*3*	*2*	*2*	*2*	*3*	*3*	*3*	*3*	*3*	*4*	*4*	*4*	*3*
Pedestrians Crossing	*0*				0				0				0			

Critical and Follow-Up Headway Adjustment

	EB			WB			NB			SB		
	Left	Right	Bypass	Left	Right	Bypass	Left	Right	Bypass	Left	Right	Bypass
Critical Headway (sec)	*4.2929*	*4.0000*	*5.1929*	*4.2929*	*4.0000*	*5.1929*	*4.2000*	*4.2000*	*5.1929*	*4.2000*	*4.2000*	*5.1929*
Follow-Up Headway (sec)	*3.1858*	*2.8000*		*3.1858*	*2.8000*		*2.8000*	*2.8000*		*2.8000*	*2.8000*	

Flow Computations

	EB			WB			NB			SB		
	Left	Right	Bypass	Left	Right	Bypass	Left	Right	Bypass	Left	Right	Bypass
Circulating Flow (V_c), pc/h	*1149*			*1006*			*202*			*335*		
Exiting Flow (V_{ex}), pc/h	*271*			*232*			*967*			*1175*		
Entry Flow (V_e), pc/h		*228*			*295*		*505*	*570*		*491*	*554*	
Entry Volume veh/h		*224*			*289*		*490*	*553*		*472*	*533*	

Capacity and v/c Ratios

	EB			WB			NB			SB		
	Left	Right	Bypass	Left	Right	Bypass	Left	Right	Bypass	Left	Right	Bypass
Capacity (c_{PCE}), pc/h		*561*			*621*		*1098*	*1098*		*991*	*991*	
Capacity (*c*), veh/h		*550*			*609*		*1066*	*1066*		*953*	*953*	
v/c Ratio (X)		*0.41*			*0.47*		*0.46*	*0.52*		*0.50*	*0.56*	

Delay and Level of Service

	EB			WB			NB			SB		
	Left	Right	Bypass	Left	Right	Bypass	Left	Right	Bypass	Left	Right	Bypass
Lane Control Delay (d), s/veh		*13.0*			*13.5*		*8.5*	*9.6*		*9.9*	*11.2*	
Lane LOS		*B*			*B*		*A*	*A*		*A*	*B*	
Lane 95% Queue		*2.0*			*2.6*		*2.5*	*3.1*		*2.8*	*3.6*	
Approach Delay, s/veh	*12.99*			*13.52*			*9.07*			*10.62*		
Approach LOS, s/veh	*B*			*B*			*A*			*B*		
Intersection Delay, s/veh	*10.52*											
Intersection LOS	*B*											

Copyright © 2015 University of Florida, All Rights Reserved *HCS 2010*™ 6.70 Roundabouts Generated: 12/9/2015 2:00 PM

APPENDIX F

TRANSPORTATION SYSTEM IMPROVEMENTS WITH BUILD TRAFFIC OPERATIONAL ANALYSIS

F1. Base Year 2016 Build Traffic

Lane Group	WBL	WBR	NBT	NBR	SBL	SBT
Lane Configurations						
Volume (vph)	165	95	600	175	95	500
Ideal Flow (vphpl)	1900	1900	1900	1900	1900	1900
Lane Width (ft)	12	12	12	12	12	12
Grade (%)	0%		0%			0%
Storage Length (ft)	0	0		225	390	
Storage Lanes	1	1		1	1	
Taper Length (ft)	100				100	
Link Speed (mph)	25		35			35
Link Distance (ft)	580		2325			691
Travel Time (s)	15.8		45.3			13.5
Confl. Peds. (#/hr)						
Confl. Bikes (#/hr)						
Peak Hour Factor	0.88	0.88	0.88	0.88	0.88	0.88
Growth Factor	100%	100%	100%	100%	100%	100%
Heavy Vehicles (%)	25%	25%	5%	5%	7%	7%
Bus Blockages (#/hr)	0	0	0	0	0	0
Parking (#/hr)						
Mid-Block Traffic (%)	0%		0%			0%
Shared Lane Traffic (%)						
Lane Group Flow (vph)	188	108	682	199	108	568
Sign Control	Stop		Free			Free

Intersection Summary	
Area Type:	Other
Control Type: Unsignalized	

Intersection	
Int Delay, s/veh	4.6

Movement	WBL	WBR	NBT	NBR	SBL	SBT
Vol, veh/h	165	95	600	175	95	500
Conflicting Peds, #/hr	0	0	0	0	0	0
Sign Control	Stop	Stop	Free	Free	Free	Free
RT Channelized	-	None	-	None	-	None
Storage Length	0	0	-	225	390	-
Veh in Median Storage, #	2	-	0	-	-	0
Grade, %	0	-	0	-	-	0
Peak Hour Factor	88	88	88	88	88	88
Heavy Vehicles, %	25	25	5	5	7	7
Mvmt Flow	188	108	682	199	108	568

Major/Minor	Minor1		Major1		Major2	
Conflicting Flow All	1182	341	0	0	682	0
Stage 1	682	-	-	-	-	-
Stage 2	500	-	-	-	-	-
Critical Hdwy	7.3	7.4	-	-	4.24	-
Critical Hdwy Stg 1	6.3	-	-	-	-	-
Critical Hdwy Stg 2	6.3	-	-	-	-	-
Follow-up Hdwy	3.75	3.55	-	-	2.27	-
Pot Cap-1 Maneuver	~ 152	592	-	-	874	-
Stage 1	407	-	-	-	-	-
Stage 2	513	-	-	-	-	-
Platoon blocked, %			-	-		-
Mov Cap-1 Maneuver	~ 133	592	-	-	874	-
Mov Cap-2 Maneuver	312	-	-	-	-	-
Stage 1	407	-	-	-	-	-
Stage 2	450	-	-	-	-	-

Approach	WB	NB	SB
HCM Control Delay, s	25.2	0	1.5
HCM LOS	D		

Minor Lane/Major Mvmt	NBT	NBR	WBLn1	WBLn2	SBL	SBT
Capacity (veh/h)	-	-	312	592	874	-
HCM Lane V/C Ratio	-	-	0.601	0.182	0.124	-
HCM Control Delay (s)	-	-	32.5	12.4	9.7	-
HCM Lane LOS	-	-	D	B	A	-
HCM 95th %tile Q(veh)	-	-	3.7	0.7	0.4	-

Notes

~: Volume exceeds capacity $: Delay exceeds 300s +: Computation Not Defined *: All major volume in platoon

Lane Group	EBL	EBT	EBR	WBL	WBT	WBR	NBL	NBT	NBR	SBL	SBT	SBR
Lane Configurations												
Volume (vph)	185	375	360	35	350	165	280	425	75	190	415	60
Ideal Flow (vphpl)	1900	1900	1900	1900	1900	1900	1900	1900	1900	1900	1900	1900
Lane Width (ft)	12	12	12	12	12	12	12	12	12	12	12	12
Grade (%)		0%			0%			0%			0%	
Storage Length (ft)	210		430	215		0	260		55	240		90
Storage Lanes	1		1	1		0	2		1	1		1
Taper Length (ft)	100			100			100			100		
Right Turn on Red			No			No			No			No
Link Speed (mph)		40			40			35			35	
Link Distance (ft)		705			1339			1052			2325	
Travel Time (s)		12.0			22.8			20.5			45.3	
Confl. Peds. (#/hr)												
Confl. Bikes (#/hr)												
Peak Hour Factor	0.81	0.81	0.81	0.81	0.81	0.81	0.81	0.81	0.81	0.81	0.81	0.81
Growth Factor	100%	100%	50%	100%	100%	100%	100%	100%	50%	100%	100%	50%
Heavy Vehicles (%)	5%	5%	5%	5%	5%	5%	10%	10%	10%	7%	7%	7%
Bus Blockages (#/hr)	0	0	0	0	0	0	0	0	0	0	0	0
Parking (#/hr)												
Mid-Block Traffic (%)		0%			0%			0%			0%	
Shared Lane Traffic (%)												
Lane Group Flow (vph)	228	463	222	43	636	0	346	525	46	235	512	37
Turn Type	pm+pt	NA	Perm	pm+pt	NA		Prot	NA	Perm	D.P+P	NA	Perm
Protected Phases	7	4		3	8		1	6		5	2	
Permitted Phases	4		4	8					6	6		2
Detector Phase	7	4	4	3	8		1	6	6	5	2	2
Switch Phase												
Minimum Initial (s)	6.0	8.0	8.0	6.0	8.0		8.0	15.0	15.0	6.0	15.0	15.0
Minimum Split (s)	10.5	48.6	48.6	10.5	50.6		12.5	45.4	45.4	10.5	50.4	50.4
Total Split (s)	24.5	36.6	36.6	24.5	36.6		24.5	46.4	46.4	24.5	46.4	46.4
Total Split (%)	18.6%	27.7%	27.7%	18.6%	27.7%		18.6%	35.2%	35.2%	18.6%	35.2%	35.2%
Maximum Green (s)	20.0	30.0	30.0	20.0	30.0		20.0	40.0	40.0	20.0	40.0	40.0
Yellow Time (s)	3.5	4.0	4.0	3.5	4.0		3.5	3.9	3.9	3.5	3.9	3.9
All-Red Time (s)	1.0	2.6	2.6	1.0	2.6		1.0	2.5	2.5	1.0	2.5	2.5
Lost Time Adjust (s)	0.0	0.0	0.0	0.0	0.0		0.0	0.0	0.0	0.0	0.0	0.0
Total Lost Time (s)	4.5	6.6	6.6	4.5	6.6		4.5	6.4	6.4	4.5	6.4	6.4
Lead/Lag	Lead	Lag	Lag	Lead	Lag		Lead	Lag	Lag	Lead	Lag	Lag
Lead-Lag Optimize?												
Vehicle Extension (s)	1.5	1.5	1.5	1.5	1.5		1.5	4.3	4.3	1.5	3.4	3.4
Minimum Gap (s)	1.5	1.5	1.5	1.5	1.5		1.5	2.0	2.0	1.5	2.0	2.0
Time Before Reduce (s)	20.0	30.0	30.0	20.0	30.0		20.0	19.0	19.0	20.0	20.0	20.0
Time To Reduce (s)	0.0	0.0	0.0	0.0	0.0		0.0	21.0	21.0	0.0	20.0	20.0
Recall Mode	None	None	None	None	None		None	Min	Min	None	Min	Min
Walk Time (s)		7.0	7.0		7.0			7.0	7.0		7.0	7.0
Flash Dont Walk (s)		35.0	35.0		37.0			32.0	32.0		37.0	37.0
Pedestrian Calls (#/hr)		0	0		0			0	0		0	0
v/c Ratio	0.62	0.68	0.39	0.14	0.79		0.72	0.65	0.13	0.62	0.66	0.11
Control Delay	26.0	35.0	28.2	19.0	44.7		51.3	39.2	33.5	26.1	40.1	34.0
Queue Delay	0.0	0.0	0.0	0.0	0.0		0.0	0.0	0.0	0.0	0.0	0.0

Lane Group	EBL	EBT	EBR	WBL	WBT	WBR	NBL	NBT	NBR	SBL	SBT	SBR
Total Delay	26.0	35.0	28.2	19.0	44.7		51.3	39.2	33.5	26.1	40.1	34.0
Queue Length 50th (ft)	87	260	108	15	196		107	154	22	91	153	18
Queue Length 95th (ft)	152	394	186	37	285		167	226	55	152	218	46
Internal Link Dist (ft)		625			1259			972			2245	
Turn Bay Length (ft)	210		430	215			260		55	240		90
Base Capacity (vph)	458	677	575	535	1037		672	1387	620	485	1426	637
Starvation Cap Reductn	0	0	0	0	0		0	0	0	0	0	0
Spillback Cap Reductn	0	0	0	0	0		0	0	0	0	0	0
Storage Cap Reductn	0	0	0	0	0		0	0	0	0	0	0
Reduced v/c Ratio	0.50	0.68	0.39	0.08	0.61		0.51	0.38	0.07	0.48	0.36	0.06

Intersection Summary

Area Type: Other
Cycle Length: 132
Actuated Cycle Length: 98.3
Natural Cycle: 125
Control Type: Actuated-Uncoordinated
Description: Runs Free. PB all app. Ped interval reduced to max green for HCM output.

Splits and Phases: 200: STH 83/Rochester Street & CTH N

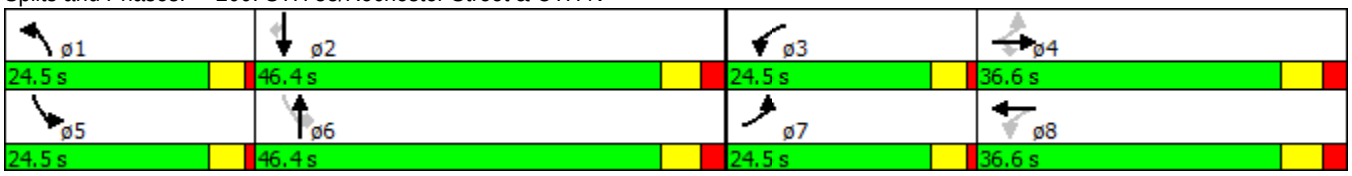

Movement	EBL	EBT	EBR	WBL	WBT	WBR	NBL	NBT	NBR	SBL	SBT	SBR
Lane Configurations												
Volume (veh/h)	185	375	360	35	350	165	280	425	75	190	415	60
Number	7	4	14	3	8	18	1	6	16	5	2	12
Initial Q (Qb), veh	0	0	0	0	0	0	0	0	0	0	0	0
Ped-Bike Adj(A_pbT)	1.00		1.00	1.00		1.00	1.00		1.00	1.00		1.00
Parking Bus, Adj	1.00	1.00	1.00	1.00	1.00	1.00	1.00	1.00	1.00	1.00	1.00	1.00
Adj Sat Flow, veh/h/ln	1810	1810	1810	1810	1810	1900	1727	1727	1727	1776	1776	1776
Adj Flow Rate, veh/h	228	463	222	43	432	204	346	525	46	235	512	37
Adj No. of Lanes	1	1	1	1	2	0	2	2	1	1	2	1
Peak Hour Factor	0.81	0.81	0.81	0.81	0.81	0.81	0.81	0.81	0.81	0.81	0.81	0.81
Percent Heavy Veh, %	5	5	5	5	5	5	10	10	10	7	7	7
Cap, veh/h	326	561	477	209	536	251	419	925	414	399	913	408
Arrive On Green	0.12	0.31	0.31	0.04	0.24	0.24	0.13	0.28	0.28	0.12	0.27	0.27
Sat Flow, veh/h	1723	1810	1538	1723	2276	1065	3191	3282	1468	1691	3374	1509
Grp Volume(v), veh/h	228	463	222	43	325	311	346	525	46	235	512	37
Grp Sat Flow(s),veh/h/ln	1723	1810	1538	1723	1719	1622	1596	1641	1468	1691	1687	1509
Q Serve(g_s), s	8.6	21.4	10.5	1.7	16.1	16.3	9.5	12.3	2.1	8.7	11.8	1.7
Cycle Q Clear(g_c), s	8.6	21.4	10.5	1.7	16.1	16.3	9.5	12.3	2.1	8.7	11.8	1.7
Prop In Lane	1.00		1.00	1.00		0.66	1.00		1.00	1.00		1.00
Lane Grp Cap(c), veh/h	326	561	477	209	405	382	419	925	414	399	913	408
V/C Ratio(X)	0.70	0.83	0.47	0.21	0.80	0.81	0.83	0.57	0.11	0.59	0.56	0.09
Avail Cap(c_a), veh/h	504	602	512	516	572	540	708	1457	652	571	1498	670
HCM Platoon Ratio	1.00	1.00	1.00	1.00	1.00	1.00	1.00	1.00	1.00	1.00	1.00	1.00
Upstream Filter(I)	1.00	1.00	1.00	1.00	1.00	1.00	1.00	1.00	1.00	1.00	1.00	1.00
Uniform Delay (d), s/veh	22.8	28.8	25.1	25.3	32.5	32.6	38.1	27.7	24.0	19.9	28.3	24.6
Incr Delay (d2), s/veh	1.0	7.9	0.3	0.2	3.6	4.3	1.6	0.9	0.2	0.5	0.6	0.1
Initial Q Delay(d3),s/veh	0.0	0.0	0.0	0.0	0.0	0.0	0.0	0.0	0.0	0.0	0.0	0.0
%ile BackOfQ(50%),veh/ln	4.1	11.9	4.5	0.8	8.0	7.7	4.3	5.7	0.9	4.0	5.6	0.7
LnGrp Delay(d),s/veh	23.8	36.7	25.3	25.4	36.1	36.8	39.7	28.5	24.2	20.4	28.9	24.7
LnGrp LOS	C	D	C	C	D	D	D	C	C	C	C	C
Approach Vol, veh/h		913			679			917			784	
Approach Delay, s/veh		30.7			35.7			32.5			26.2	
Approach LOS		C			D			C			C	

Timer	1	2	3	4	5	6	7	8
Assigned Phs	1	2	3	4	5	6	7	8
Phs Duration (G+Y+Rc), s	16.3	30.8	8.5	34.5	15.3	31.8	15.2	27.8
Change Period (Y+Rc), s	4.5	6.4	4.5	6.6	4.5	6.4	4.5	6.6
Max Green Setting (Gmax), s	20.0	40.0	20.0	30.0	20.0	40.0	20.0	30.0
Max Q Clear Time (g_c+I1), s	11.5	13.8	3.7	23.4	10.7	14.3	10.6	18.3
Green Ext Time (p_c), s	0.3	10.6	0.0	2.2	0.1	10.5	0.1	2.9

Intersection Summary	
HCM 2010 Ctrl Delay	31.2
HCM 2010 LOS	C

Notes

User approved pedestrian interval to be less than phase max green.

Lane Group	EBL	EBT	EBR	WBL	WBT	WBR	NBL	NBT	NBR	SBL	SBT	SBR
Lane Configurations												
Volume (vph)	1	610	30	90	590	10	60	1	270	40	1	1
Ideal Flow (vphpl)	1900	1900	1900	1900	1900	1900	1900	1900	1900	1900	1900	1900
Lane Width (ft)	12	12	12	12	12	12	12	12	12	12	12	12
Grade (%)		0%			0%			0%			0%	
Storage Length (ft)	200		0	100		0	0		100	0		0
Storage Lanes	1		0	1		0	0		1	0		0
Taper Length (ft)	100			100			100			100		
Right Turn on Red			No			No			No			No
Link Speed (mph)		40			40			25			25	
Link Distance (ft)		1050			1554			303			468	
Travel Time (s)		17.9			26.5			8.3			12.8	
Confl. Peds. (#/hr)												
Confl. Bikes (#/hr)												
Peak Hour Factor	0.72	0.72	0.72	0.72	0.72	0.72	0.72	0.72	0.72	0.72	0.72	0.72
Growth Factor	100%	100%	100%	100%	100%	100%	100%	100%	50%	100%	100%	100%
Heavy Vehicles (%)	2%	2%	2%	5%	5%	5%	12%	12%	12%	2%	2%	2%
Bus Blockages (#/hr)	0	0	0	0	0	0	0	0	0	0	0	0
Parking (#/hr)												
Mid-Block Traffic (%)		0%			0%			0%			0%	
Shared Lane Traffic (%)												
Lane Group Flow (vph)	1	889	0	125	833	0	0	84	188	0	58	0
Turn Type	Perm	NA		pm+pt	NA		Perm	NA	Perm	Perm	NA	
Protected Phases		6		5	2			8			4	
Permitted Phases	6			2			8		8	4		
Detector Phase	6	6		5	2		8	8	8	4	4	
Switch Phase												
Minimum Initial (s)	15.0	15.0		6.0	7.0		6.0	6.0	6.0	6.0	6.0	
Minimum Split (s)	25.7	25.7		11.7	25.7		24.0	24.0	24.0	24.0	24.0	
Total Split (s)	65.7	65.7		30.7	65.7		34.0	34.0	34.0	34.0	34.0	
Total Split (%)	50.4%	50.4%		23.5%	50.4%		26.1%	26.1%	26.1%	26.1%	26.1%	
Maximum Green (s)	60.0	60.0		25.0	60.0		30.0	30.0	30.0	30.0	30.0	
Yellow Time (s)	4.5	4.5		4.5	4.5		3.0	3.0	3.0	3.0	3.0	
All-Red Time (s)	1.2	1.2		1.2	1.2		1.0	1.0	1.0	1.0	1.0	
Lost Time Adjust (s)	0.0	0.0		0.0	0.0			0.0	0.0		0.0	
Total Lost Time (s)	5.7	5.7		5.7	5.7			4.0	4.0		4.0	
Lead/Lag	Lag	Lag		Lead								
Lead-Lag Optimize?												
Vehicle Extension (s)	5.5	5.5		4.5	5.5		3.0	3.0	3.0	3.0	3.0	
Minimum Gap (s)	2.0	2.0		0.2	2.0		1.5	1.5	1.5	1.5	1.5	
Time Before Reduce (s)	0.0	0.0		0.0	0.0		0.0	0.0	0.0	0.0	0.0	
Time To Reduce (s)	0.0	0.0		0.0	0.0		0.0	0.0	0.0	0.0	0.0	
Recall Mode	Min	Min		None	Min		None	None	None	None	None	
Walk Time (s)	6.0	6.0			6.0		6.0	6.0	6.0	6.0	6.0	
Flash Dont Walk (s)	14.0	14.0			14.0		14.0	14.0	14.0	14.0	14.0	
Pedestrian Calls (#/hr)	0	0			0		0	0	0	0	0	
v/c Ratio	0.00	0.86		0.40	0.63			0.39	0.74		0.25	
Control Delay	14.0	31.7		9.9	10.7			44.8	60.0		41.0	
Queue Delay	0.0	0.0		0.0	0.0			0.0	0.0		0.0	

Lane Group	EBL	EBT	EBR	WBL	WBT	WBR	NBL	NBT	NBR	SBL	SBT	SBR
Total Delay	14.0	31.7		9.9	10.7			44.8	60.0		41.0	
Queue Length 50th (ft)	0	481		21	241			51	123		34	
Queue Length 95th (ft)	3	580		40	308			81	161		59	
Internal Link Dist (ft)		970			1474			223			388	
Turn Bay Length (ft)	200			100					100			
Base Capacity (vph)	364	1039		494	1531			343	404		367	
Starvation Cap Reductn	0	0		0	0			0	0		0	
Spillback Cap Reductn	0	0		0	0			0	0		0	
Storage Cap Reductn	0	0		0	0			0	0		0	
Reduced v/c Ratio	0.00	0.86		0.25	0.54			0.24	0.47		0.16	

Intersection Summary

Area Type: Other
Cycle Length: 130.4
Actuated Cycle Length: 107.5
Natural Cycle: 90
Control Type: Actuated-Uncoordinated
Description: Runs Free. Ped PB. No Xwalks.

Splits and Phases: 300: HS Dwy/Fairwinds Boulevard & CTH N

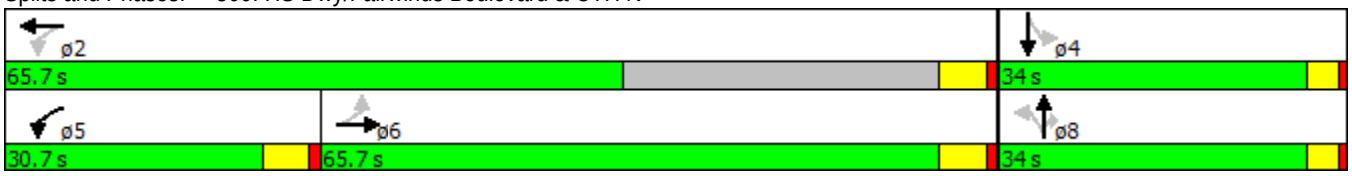

Movement	EBL	EBT	EBR	WBL	WBT	WBR	NBL	NBT	NBR	SBL	SBT	SBR
Lane Configurations												
Volume (veh/h)	1	610	30	90	590	10	60	1	270	40	1	1
Number	1	6	16	5	2	12	3	8	18	7	4	14
Initial Q (Qb), veh	0	0	0	0	0	0	0	0	0	0	0	0
Ped-Bike Adj(A_pbT)	1.00		1.00	1.00		1.00	1.00		1.00	1.00		1.00
Parking Bus, Adj	1.00	1.00	1.00	1.00	1.00	1.00	1.00	1.00	1.00	1.00	1.00	1.00
Adj Sat Flow, veh/h/ln	1863	1863	1900	1810	1810	1900	1900	1696	1696	1900	1863	1900
Adj Flow Rate, veh/h	1	847	42	125	819	14	83	1	188	56	1	1
Adj No. of Lanes	1	1	0	1	1	0	0	1	1	0	1	0
Peak Hour Factor	0.72	0.72	0.72	0.72	0.72	0.72	0.72	0.72	0.72	0.72	0.72	0.72
Percent Heavy Veh, %	2	2	2	5	5	5	12	12	12	2	2	2
Cap, veh/h	405	1053	52	329	1290	22	317	3	236	216	4	2
Arrive On Green	0.60	0.60	0.60	0.06	0.73	0.73	0.16	0.16	0.16	0.16	0.16	0.16
Sat Flow, veh/h	656	1760	87	1723	1774	30	1447	20	1442	835	24	15
Grp Volume(v), veh/h	1	0	889	125	0	833	84	0	188	58	0	0
Grp Sat Flow(s),veh/h/ln	656	0	1847	1723	0	1804	1467	0	1442	874	0	0
Q Serve(g_s), s	0.1	0.0	33.0	2.2	0.0	20.7	0.0	0.0	11.1	3.8	0.0	0.0
Cycle Q Clear(g_c), s	9.4	0.0	33.0	2.2	0.0	20.7	4.1	0.0	11.1	7.9	0.0	0.0
Prop In Lane	1.00		0.05	1.00		0.02	0.99		1.00	0.97		0.02
Lane Grp Cap(c), veh/h	405	0	1105	329	0	1312	321	0	236	223	0	0
V/C Ratio(X)	0.00	0.00	0.80	0.38	0.00	0.64	0.26	0.00	0.80	0.26	0.00	0.00
Avail Cap(c_a), veh/h	457	0	1251	704	0	1312	546	0	488	433	0	0
HCM Platoon Ratio	1.00	1.00	1.00	1.00	1.00	1.00	1.00	1.00	1.00	1.00	1.00	1.00
Upstream Filter(I)	1.00	0.00	1.00	1.00	0.00	1.00	1.00	0.00	1.00	1.00	0.00	0.00
Uniform Delay (d), s/veh	11.4	0.0	13.8	13.5	0.0	6.1	32.7	0.0	35.6	36.0	0.0	0.0
Incr Delay (d2), s/veh	0.0	0.0	4.9	1.2	0.0	1.7	0.4	0.0	6.1	0.6	0.0	0.0
Initial Q Delay(d3),s/veh	0.0	0.0	0.0	0.0	0.0	0.0	0.0	0.0	0.0	0.0	0.0	0.0
%ile BackOfQ(50%),veh/ln	0.0	0.0	18.0	1.6	0.0	10.8	1.9	0.0	4.8	1.3	0.0	0.0
LnGrp Delay(d),s/veh	11.4	0.0	18.7	14.7	0.0	7.8	33.1	0.0	41.7	36.6	0.0	0.0
LnGrp LOS	B		B	B		A	C		D	D		
Approach Vol, veh/h		890			958			272			58	
Approach Delay, s/veh		18.7			8.7			39.1			36.6	
Approach LOS		B			A			D			D	

Timer	1	2	3	4	5	6	7	8
Assigned Phs		2		4	5	6		8
Phs Duration (G+Y+Rc), s		70.1		18.5	11.4	58.7		18.5
Change Period (Y+Rc), s		* 5.7		4.0	* 5.7	* 5.7		4.0
Max Green Setting (Gmax), s		* 60		30.0	* 25	* 60		30.0
Max Q Clear Time (g_c+I1), s		22.7		9.9	4.2	35.0		13.1
Green Ext Time (p_c), s		31.2		1.5	0.6	17.9		1.4

Intersection Summary	
HCM 2010 Ctrl Delay	17.3
HCM 2010 LOS	B

Notes

* HCM 2010 computational engine requires equal clearance times for the phases crossing the barrier.

Lane Group	WBL	WBR	NBT	NBR	SBL	SBT
Lane Configurations						
Volume (vph)	180	85	645	145	95	685
Ideal Flow (vphpl)	1900	1900	1900	1900	1900	1900
Lane Width (ft)	12	12	12	12	12	12
Grade (%)	0%		0%			0%
Storage Length (ft)	0	0		225	390	
Storage Lanes	1	1		1	1	
Taper Length (ft)	100				100	
Link Speed (mph)	25		35			35
Link Distance (ft)	580		2325			691
Travel Time (s)	15.8		45.3			13.5
Confl. Peds. (#/hr)						
Confl. Bikes (#/hr)						
Peak Hour Factor	0.92	0.92	0.92	0.92	0.92	0.92
Growth Factor	100%	100%	100%	100%	100%	100%
Heavy Vehicles (%)	2%	2%	3%	3%	4%	4%
Bus Blockages (#/hr)	0	0	0	0	0	0
Parking (#/hr)						
Mid-Block Traffic (%)	0%		0%			0%
Shared Lane Traffic (%)						
Lane Group Flow (vph)	196	92	701	158	103	745
Sign Control	Stop		Free			Free

Intersection Summary	
Area Type:	Other
Control Type: Unsignalized	

Intersection	
Int Delay, s/veh	4

Movement	WBL	WBR	NBT	NBR	SBL	SBT
Vol, veh/h	180	85	645	145	95	685
Conflicting Peds, #/hr	0	0	0	0	0	0
Sign Control	Stop	Stop	Free	Free	Free	Free
RT Channelized	-	None	-	None	-	None
Storage Length	0	0	-	225	390	-
Veh in Median Storage, #	2	-	0	-	-	0
Grade, %	0	-	0	-	-	0
Peak Hour Factor	92	92	92	92	92	92
Heavy Vehicles, %	2	2	3	3	4	4
Mvmt Flow	196	92	701	158	103	745

Major/Minor	Minor1		Major1		Major2	
Conflicting Flow All	1280	351	0	0	701	0
Stage 1	701	-	-	-	-	-
Stage 2	579	-	-	-	-	-
Critical Hdwy	6.84	6.94	-	-	4.18	-
Critical Hdwy Stg 1	5.84	-	-	-	-	-
Critical Hdwy Stg 2	5.84	-	-	-	-	-
Follow-up Hdwy	3.52	3.32	-	-	2.24	-
Pot Cap-1 Maneuver	~ 158	645	-	-	879	-
Stage 1	453	-	-	-	-	-
Stage 2	524	-	-	-	-	-
Platoon blocked, %			-	-		-
Mov Cap-1 Maneuver	~ 139	645	-	-	879	-
Mov Cap-2 Maneuver	334	-	-	-	-	-
Stage 1	453	-	-	-	-	-
Stage 2	463	-	-	-	-	-

Approach	WB	NB	SB
HCM Control Delay, s	24	0	1.2
HCM LOS	C		

Minor Lane/Major Mvmt	NBT	NBR	WBLn1	WBLn2	SBL	SBT
Capacity (veh/h)	-	-	334	645	879	-
HCM Lane V/C Ratio	-	-	0.586	0.143	0.117	-
HCM Control Delay (s)	-	-	29.9	11.5	9.6	-
HCM Lane LOS	-	-	D	B	A	-
HCM 95th %tile Q(veh)	-	-	3.5	0.5	0.4	-

Notes

~: Volume exceeds capacity $: Delay exceeds 300s +: Computation Not Defined *: All major volume in platoon

Lane Group	EBL	EBT	EBR	WBL	WBT	WBR	NBL	NBT	NBR	SBL	SBT	SBR
Lane Configurations												
Volume (vph)	120	230	295	95	355	195	360	475	80	175	495	195
Ideal Flow (vphpl)	1900	1900	1900	1900	1900	1900	1900	1900	1900	1900	1900	1900
Lane Width (ft)	12	12	12	12	12	12	12	12	12	12	12	12
Grade (%)		0%			0%			0%			0%	
Storage Length (ft)	210		430	215		0	260		55	240		90
Storage Lanes	1		1	1		0	2		1	1		1
Taper Length (ft)	100			100			100			100		
Right Turn on Red			No			No			No			No
Link Speed (mph)		40			40			35			35	
Link Distance (ft)		705			1339			1052			2325	
Travel Time (s)		12.0			22.8			20.5			45.3	
Confl. Peds. (#/hr)												
Confl. Bikes (#/hr)												
Peak Hour Factor	0.93	0.93	0.93	0.93	0.93	0.93	0.93	0.93	0.93	0.93	0.93	0.93
Growth Factor	100%	100%	50%	100%	100%	100%	100%	100%	50%	100%	100%	50%
Heavy Vehicles (%)	3%	3%	3%	1%	1%	1%	2%	2%	2%	3%	3%	3%
Bus Blockages (#/hr)	0	0	0	0	0	0	0	0	0	0	0	0
Parking (#/hr)												
Mid-Block Traffic (%)		0%			0%			0%			0%	
Shared Lane Traffic (%)												
Lane Group Flow (vph)	129	247	159	102	592	0	387	511	43	188	532	105
Turn Type	pm+pt	NA	Perm	pm+pt	NA		Prot	NA	Perm	D.P+P	NA	Perm
Protected Phases	7	4		3	8		1	6		5	2	
Permitted Phases	4		4	8					6	6		2
Detector Phase	7	4	4	3	8		1	6	6	5	2	2
Switch Phase												
Minimum Initial (s)	6.0	8.0	8.0	6.0	8.0		8.0	15.0	15.0	6.0	15.0	15.0
Minimum Split (s)	10.5	48.6	48.6	10.5	50.6		12.5	45.4	45.4	10.5	50.4	50.4
Total Split (s)	24.5	36.6	36.6	24.5	36.6		24.5	46.4	46.4	24.5	46.4	46.4
Total Split (%)	18.6%	27.7%	27.7%	18.6%	27.7%		18.6%	35.2%	35.2%	18.6%	35.2%	35.2%
Maximum Green (s)	20.0	30.0	30.0	20.0	30.0		20.0	40.0	40.0	20.0	40.0	40.0
Yellow Time (s)	3.5	4.0	4.0	3.5	4.0		3.5	3.9	3.9	3.5	3.9	3.9
All-Red Time (s)	1.0	2.6	2.6	1.0	2.6		1.0	2.5	2.5	1.0	2.5	2.5
Lost Time Adjust (s)	0.0	0.0	0.0	0.0	0.0		0.0	0.0	0.0	0.0	0.0	0.0
Total Lost Time (s)	4.5	6.6	6.6	4.5	6.6		4.5	6.4	6.4	4.5	6.4	6.4
Lead/Lag	Lead	Lag	Lag	Lead	Lag		Lead	Lag	Lag	Lead	Lag	Lag
Lead-Lag Optimize?												
Vehicle Extension (s)	1.5	1.5	1.5	1.5	1.5		1.5	4.3	4.3	1.5	3.4	3.4
Minimum Gap (s)	1.5	1.5	1.5	1.5	1.5		1.5	2.0	2.0	1.5	2.0	2.0
Time Before Reduce (s)	20.0	30.0	30.0	20.0	30.0		20.0	19.0	19.0	20.0	20.0	20.0
Time To Reduce (s)	0.0	0.0	0.0	0.0	0.0		0.0	21.0	21.0	0.0	20.0	20.0
Recall Mode	None	None	None	None	None		None	Min	Min	None	Min	Min
Walk Time (s)		7.0	7.0		7.0			7.0	7.0		7.0	7.0
Flash Dont Walk (s)		35.0	35.0		37.0			32.0	32.0		37.0	37.0
Pedestrian Calls (#/hr)		0	0		0			0	0		0	0
v/c Ratio	0.41	0.48	0.36	0.23	0.77		0.69	0.50	0.09	0.45	0.63	0.28
Control Delay	21.8	32.8	31.4	19.2	40.5		43.6	29.0	26.4	18.1	35.0	32.3
Queue Delay	0.0	0.0	0.0	0.0	0.0		0.0	0.0	0.0	0.0	0.0	0.0

Lane Group	EBL	EBT	EBR	WBL	WBT	WBR	NBL	NBT	NBR	SBL	SBT	SBR
Total Delay	21.8	32.8	31.4	19.2	40.5		43.6	29.0	26.4	18.1	35.0	32.3
Queue Length 50th (ft)	44	118	73	34	162		105	121	17	58	137	47
Queue Length 95th (ft)	96	227	153	78	266		187	213	51	123	238	111
Internal Link Dist (ft)		625			1259			972			2245	
Turn Bay Length (ft)	210		430	215			260		55	240		90
Base Capacity (vph)	490	657	558	622	1193		807	1664	744	584	1648	737
Starvation Cap Reductn	0	0	0	0	0		0	0	0	0	0	0
Spillback Cap Reductn	0	0	0	0	0		0	0	0	0	0	0
Storage Cap Reductn	0	0	0	0	0		0	0	0	0	0	0
Reduced v/c Ratio	0.26	0.38	0.28	0.16	0.50		0.48	0.31	0.06	0.32	0.32	0.14

Intersection Summary

Area Type: Other
Cycle Length: 132
Actuated Cycle Length: 88.2
Natural Cycle: 125
Control Type: Actuated-Uncoordinated
Description: Runs Free. PB all app. Ped interval reduced to max green for HCM output.

Splits and Phases: 200: STH 83/Rochester Street & CTH N

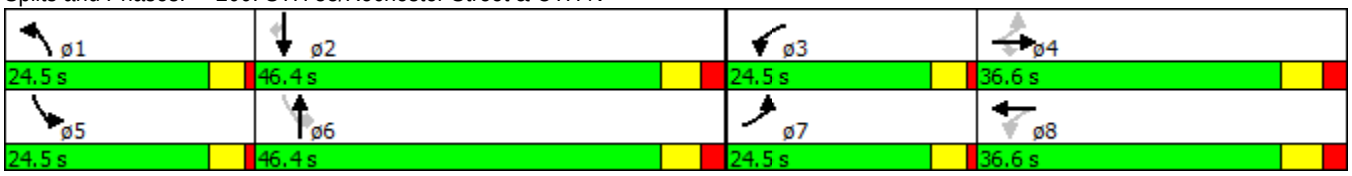

Movement	EBL	EBT	EBR	WBL	WBT	WBR	NBL	NBT	NBR	SBL	SBT	SBR
Lane Configurations												
Volume (veh/h)	120	230	295	95	355	195	360	475	80	175	495	195
Number	7	4	14	3	8	18	1	6	16	5	2	12
Initial Q (Qb), veh	0	0	0	0	0	0	0	0	0	0	0	0
Ped-Bike Adj(A_pbT)	1.00		1.00	1.00		1.00	1.00		1.00	1.00		1.00
Parking Bus, Adj	1.00	1.00	1.00	1.00	1.00	1.00	1.00	1.00	1.00	1.00	1.00	1.00
Adj Sat Flow, veh/h/ln	1845	1845	1845	1881	1881	1900	1863	1863	1863	1845	1845	1845
Adj Flow Rate, veh/h	129	247	159	102	382	210	387	511	43	188	532	105
Adj No. of Lanes	1	1	1	1	2	0	2	2	1	1	2	1
Peak Hour Factor	0.93	0.93	0.93	0.93	0.93	0.93	0.93	0.93	0.93	0.93	0.93	0.93
Percent Heavy Veh, %	3	3	3	1	1	1	2	2	2	3	3	3
Cap, veh/h	269	419	356	316	486	264	477	1193	534	444	1023	457
Arrive On Green	0.08	0.23	0.23	0.07	0.22	0.22	0.14	0.34	0.34	0.09	0.29	0.29
Sat Flow, veh/h	1757	1845	1568	1792	2240	1214	3442	3539	1583	1757	3505	1568
Grp Volume(v), veh/h	129	247	159	102	304	288	387	511	43	188	532	105
Grp Sat Flow(s),veh/h/ln	1757	1845	1568	1792	1787	1667	1721	1770	1583	1757	1752	1568
Q Serve(g_s), s	4.5	9.6	7.0	3.5	12.8	13.1	8.7	8.9	1.5	5.5	10.1	4.1
Cycle Q Clear(g_c), s	4.5	9.6	7.0	3.5	12.8	13.1	8.7	8.9	1.5	5.5	10.1	4.1
Prop In Lane	1.00		1.00	1.00		0.73	1.00		1.00	1.00		1.00
Lane Grp Cap(c), veh/h	269	419	356	316	388	362	477	1193	534	444	1023	457
V/C Ratio(X)	0.48	0.59	0.45	0.32	0.78	0.80	0.81	0.43	0.08	0.42	0.52	0.23
Avail Cap(c_a), veh/h	573	692	588	644	671	626	861	1771	792	720	1754	785
HCM Platoon Ratio	1.00	1.00	1.00	1.00	1.00	1.00	1.00	1.00	1.00	1.00	1.00	1.00
Upstream Filter(I)	1.00	1.00	1.00	1.00	1.00	1.00	1.00	1.00	1.00	1.00	1.00	1.00
Uniform Delay (d), s/veh	22.8	27.6	26.6	22.2	29.5	29.6	33.4	20.5	18.0	15.2	23.6	21.5
Incr Delay (d2), s/veh	0.5	0.5	0.3	0.2	1.3	1.5	1.3	0.4	0.1	0.2	0.5	0.3
Initial Q Delay(d3),s/veh	0.0	0.0	0.0	0.0	0.0	0.0	0.0	0.0	0.0	0.0	0.0	0.0
%ile BackOfQ(50%),veh/ln	2.2	4.9	3.0	1.7	6.5	6.2	4.2	4.4	0.7	2.6	4.9	1.8
LnGrp Delay(d),s/veh	23.2	28.1	26.9	22.5	30.8	31.2	34.7	20.9	18.2	15.4	24.1	21.8
LnGrp LOS	C	C	C	C	C	C	C	C	B	B	C	C
Approach Vol, veh/h		535			694			941			825	
Approach Delay, s/veh		26.6			29.7			26.4			21.8	
Approach LOS		C			C			C			C	

Timer	1	2	3	4	5	6	7	8
Assigned Phs	1	2	3	4	5	6	7	8
Phs Duration (G+Y+Rc), s	15.6	29.7	9.9	24.7	12.0	33.4	10.7	24.0
Change Period (Y+Rc), s	4.5	6.4	4.5	6.6	4.5	6.4	4.5	6.6
Max Green Setting (Gmax), s	20.0	40.0	20.0	30.0	20.0	40.0	20.0	30.0
Max Q Clear Time (g_c+I1), s	10.7	12.1	5.5	11.6	7.5	10.9	6.5	15.1
Green Ext Time (p_c), s	0.4	11.2	0.1	2.4	0.1	11.4	0.1	2.3

Intersection Summary	
HCM 2010 Ctrl Delay	26.0
HCM 2010 LOS	C

Notes

User approved pedestrian interval to be less than phase max green.

Lane Group	EBL	EBT	EBR	WBL	WBT	WBR	NBL	NBT	NBR	SBL	SBT	SBR
Lane Configurations												
Volume (vph)	5	540	5	15	860	35	35	1	85	20	1	1
Ideal Flow (vphpl)	1900	1900	1900	1900	1900	1900	1900	1900	1900	1900	1900	1900
Lane Width (ft)	12	12	12	12	12	12	12	12	12	12	12	12
Grade (%)		0%			0%			0%			0%	
Storage Length (ft)	200		0	100		0	0		100	0		0
Storage Lanes	1		0	1		0	0		1	0		0
Taper Length (ft)	100			100			100			100		
Right Turn on Red			No			No			No			No
Link Speed (mph)		40			40			25			25	
Link Distance (ft)		1050			1554			303			468	
Travel Time (s)		17.9			26.5			8.3			12.8	
Confl. Peds. (#/hr)												
Confl. Bikes (#/hr)												
Peak Hour Factor	0.91	0.91	0.91	0.91	0.91	0.91	0.91	0.91	0.91	0.91	0.91	0.91
Growth Factor	100%	100%	100%	100%	100%	100%	100%	100%	50%	100%	100%	100%
Heavy Vehicles (%)	3%	3%	3%	1%	1%	1%	1%	1%	1%	5%	5%	5%
Bus Blockages (#/hr)	0	0	0	0	0	0	0	0	0	0	0	0
Parking (#/hr)												
Mid-Block Traffic (%)		0%			0%			0%			0%	
Shared Lane Traffic (%)												
Lane Group Flow (vph)	5	598	0	16	983	0	0	39	47	0	24	0
Turn Type	Perm	NA		pm+pt	NA		Perm	NA	Perm	Perm	NA	
Protected Phases		6		5	2			8			4	
Permitted Phases	6			2			8		8	4		
Detector Phase	6	6		5	2		8	8	8	4	4	
Switch Phase												
Minimum Initial (s)	15.0	15.0		6.0	7.0		6.0	6.0	6.0	6.0	6.0	
Minimum Split (s)	25.7	25.7		11.7	25.7		24.0	24.0	24.0	24.0	24.0	
Total Split (s)	65.7	65.7		30.7	65.7		34.0	34.0	34.0	34.0	34.0	
Total Split (%)	50.4%	50.4%		23.5%	50.4%		26.1%	26.1%	26.1%	26.1%	26.1%	
Maximum Green (s)	60.0	60.0		25.0	60.0		30.0	30.0	30.0	30.0	30.0	
Yellow Time (s)	4.5	4.5		4.5	4.5		3.0	3.0	3.0	3.0	3.0	
All-Red Time (s)	1.2	1.2		1.2	1.2		1.0	1.0	1.0	1.0	1.0	
Lost Time Adjust (s)	0.0	0.0		0.0	0.0			0.0	0.0		0.0	
Total Lost Time (s)	5.7	5.7		5.7	5.7			4.0	4.0		4.0	
Lead/Lag	Lag	Lag		Lead								
Lead-Lag Optimize?												
Vehicle Extension (s)	5.5	5.5		4.5	5.5		3.0	3.0	3.0	3.0	3.0	
Minimum Gap (s)	2.0	2.0		0.2	2.0		1.5	1.5	1.5	1.5	1.5	
Time Before Reduce (s)	0.0	0.0		0.0	0.0		0.0	0.0	0.0	0.0	0.0	
Time To Reduce (s)	0.0	0.0		0.0	0.0		0.0	0.0	0.0	0.0	0.0	
Recall Mode	Min	Min		None	Min		None	None	None	None	None	
Walk Time (s)	6.0	6.0			6.0		6.0	6.0	6.0	6.0	6.0	
Flash Dont Walk (s)	14.0	14.0			14.0		14.0	14.0	14.0	14.0	14.0	
Pedestrian Calls (#/hr)	0	0			0		0	0	0	0	0	
v/c Ratio	0.01	0.43		0.03	0.67			0.22	0.23		0.14	
Control Delay	5.4	6.8		2.7	7.8			31.4	30.8		30.0	
Queue Delay	0.0	0.0		0.0	0.0			0.0	0.0		0.0	

Lane Group	EBL	EBT	EBR	WBL	WBT	WBR	NBL	NBT	NBR	SBL	SBT	SBR
Total Delay	5.4	6.8		2.7	7.8			31.4	30.8		30.0	
Queue Length 50th (ft)	0	70		1	164			12	15		7	
Queue Length 95th (ft)	6	262		6	332			46	52		33	
Internal Link Dist (ft)		970			1474			223			388	
Turn Bay Length (ft)	200			100					100			
Base Capacity (vph)	437	1675		969	1870			683	813		654	
Starvation Cap Reductn	0	0		0	0			0	0		0	
Spillback Cap Reductn	0	0		0	0			0	0		0	
Storage Cap Reductn	0	0		0	0			0	0		0	
Reduced v/c Ratio	0.01	0.36		0.02	0.53			0.06	0.06		0.04	

Intersection Summary

Area Type: Other
Cycle Length: 130.4
Actuated Cycle Length: 62.3
Natural Cycle: 75
Control Type: Actuated-Uncoordinated
Description: Runs Free. Ped PB. No Xwalks.

Splits and Phases: 300: HS Dwy/Fairwinds Boulevard & CTH N

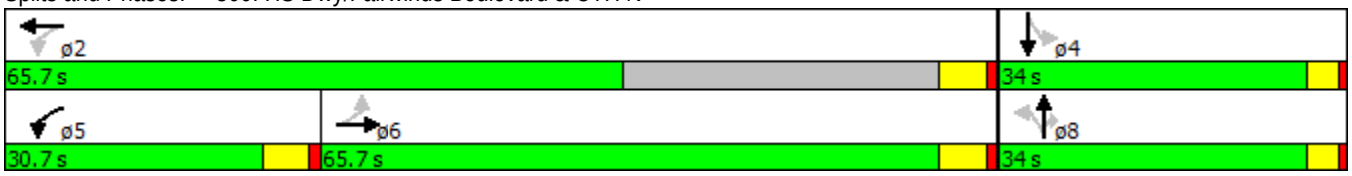

Movement	EBL	EBT	EBR	WBL	WBT	WBR	NBL	NBT	NBR	SBL	SBT	SBR
Lane Configurations												
Volume (veh/h)	5	540	5	15	860	35	35	1	85	20	1	1
Number	1	6	16	5	2	12	3	8	18	7	4	14
Initial Q (Qb), veh	0	0	0	0	0	0	0	0	0	0	0	0
Ped-Bike Adj(A_pbT)	1.00		1.00	1.00		1.00	1.00		1.00	1.00		1.00
Parking Bus, Adj	1.00	1.00	1.00	1.00	1.00	1.00	1.00	1.00	1.00	1.00	1.00	1.00
Adj Sat Flow, veh/h/ln	1845	1845	1900	1881	1881	1900	1900	1881	1881	1900	1810	1900
Adj Flow Rate, veh/h	5	593	5	16	945	38	38	1	47	22	1	1
Adj No. of Lanes	1	1	0	1	1	0	0	1	1	0	1	0
Peak Hour Factor	0.91	0.91	0.91	0.91	0.91	0.91	0.91	0.91	0.91	0.91	0.91	0.91
Percent Heavy Veh, %	3	3	3	1	1	1	1	1	1	5	5	5
Cap, veh/h	414	1251	11	582	1415	57	216	4	120	164	7	3
Arrive On Green	0.68	0.68	0.68	0.02	0.79	0.79	0.07	0.07	0.07	0.07	0.07	0.07
Sat Flow, veh/h	565	1827	15	1792	1796	72	1539	59	1599	890	99	43
Grp Volume(v), veh/h	5	0	598	16	0	983	39	0	47	24	0	0
Grp Sat Flow(s),veh/h/ln	565	0	1842	1792	0	1868	1598	0	1599	1032	0	0
Q Serve(g_s), s	0.3	0.0	10.7	0.2	0.0	16.7	0.0	0.0	2.0	1.0	0.0	0.0
Cycle Q Clear(g_c), s	9.6	0.0	10.7	0.2	0.0	16.7	1.5	0.0	2.0	2.4	0.0	0.0
Prop In Lane	1.00		0.01	1.00		0.04	0.97		1.00	0.92		0.04
Lane Grp Cap(c), veh/h	414	0	1261	582	0	1472	220	0	120	175	0	0
V/C Ratio(X)	0.01	0.00	0.47	0.03	0.00	0.67	0.18	0.00	0.39	0.14	0.00	0.00
Avail Cap(c_a), veh/h	506	0	1561	1174	0	1583	720	0	677	641	0	0
HCM Platoon Ratio	1.00	1.00	1.00	1.00	1.00	1.00	1.00	1.00	1.00	1.00	1.00	1.00
Upstream Filter(I)	1.00	0.00	1.00	1.00	0.00	1.00	1.00	0.00	1.00	1.00	0.00	0.00
Uniform Delay (d), s/veh	7.1	0.0	5.2	3.7	0.0	3.4	31.0	0.0	31.2	31.8	0.0	0.0
Incr Delay (d2), s/veh	0.0	0.0	0.8	0.0	0.0	1.7	0.4	0.0	2.1	0.4	0.0	0.0
Initial Q Delay(d3),s/veh	0.0	0.0	0.0	0.0	0.0	0.0	0.0	0.0	0.0	0.0	0.0	0.0
%ile BackOfQ(50%),veh/ln	0.0	0.0	5.6	0.1	0.0	8.9	0.7	0.0	0.9	0.5	0.0	0.0
LnGrp Delay(d),s/veh	7.2	0.0	6.0	3.7	0.0	5.0	31.3	0.0	33.3	32.1	0.0	0.0
LnGrp LOS	A		A	A		A	C		C	C		
Approach Vol, veh/h		603			999			86			24	
Approach Delay, s/veh		6.0			5.0			32.4			32.1	
Approach LOS		A			A			C			C	

Timer	1	2	3	4	5	6	7	8
Assigned Phs		2		4	5	6		8
Phs Duration (G+Y+Rc), s		61.5		9.3	7.3	54.2		9.3
Change Period (Y+Rc), s		* 5.7		4.0	* 5.7	* 5.7		4.0
Max Green Setting (Gmax), s		* 60		30.0	* 25	* 60		30.0
Max Q Clear Time (g_c+I1), s		18.7		4.4	2.2	12.7		4.0
Green Ext Time (p_c), s		32.2		0.5	0.0	35.8		0.5

Intersection Summary	
HCM 2010 Ctrl Delay	7.1
HCM 2010 LOS	A

Notes

* HCM 2010 computational engine requires equal clearance times for the phases crossing the barrier.

APPENDIX F

TRANSPORTATION SYSTEM IMPROVEMENTS WITH BUILD TRAFFIC OPERATIONAL ANALYSIS

F2. Horizon Year 2026 Build Traffic

Lane Group	WBL	WBR	NBT	NBR	SBL	SBT
Lane Configurations						
Volume (vph)	165	95	645	175	95	545
Ideal Flow (vphpl)	1900	1900	1900	1900	1900	1900
Lane Width (ft)	12	12	12	12	12	12
Grade (%)	0%		0%			0%
Storage Length (ft)	0	0		225	390	
Storage Lanes	1	1		1	1	
Taper Length (ft)	100				100	
Right Turn on Red		No		No		
Link Speed (mph)	25		35			35
Link Distance (ft)	580		2325			691
Travel Time (s)	15.8		45.3			13.5
Confl. Peds. (#/hr)						
Confl. Bikes (#/hr)						
Peak Hour Factor	0.88	0.88	0.88	0.88	0.88	0.88
Growth Factor	100%	50%	100%	50%	100%	100%
Heavy Vehicles (%)	25%	25%	5%	5%	7%	7%
Bus Blockages (#/hr)	0	0	0	0	0	0
Parking (#/hr)						
Mid-Block Traffic (%)	0%		0%			0%
Shared Lane Traffic (%)						
Lane Group Flow (vph)	188	54	733	99	108	619
Turn Type	Prot	Perm	NA	Perm	Perm	NA
Protected Phases	8		2			6
Permitted Phases		8		2	6	
Detector Phase	8	8	2	2	6	6
Switch Phase						
Minimum Initial (s)	10.0	10.0	15.0	15.0	15.0	15.0
Minimum Split (s)	16.0	16.0	21.0	21.0	21.0	21.0
Total Split (s)	35.0	35.0	55.0	55.0	55.0	55.0
Total Split (%)	38.9%	38.9%	61.1%	61.1%	61.1%	61.1%
Maximum Green (s)	29.0	29.0	49.0	49.0	49.0	49.0
Yellow Time (s)	4.0	4.0	4.0	4.0	4.0	4.0
All-Red Time (s)	2.0	2.0	2.0	2.0	2.0	2.0
Lost Time Adjust (s)	0.0	0.0	0.0	0.0	0.0	0.0
Total Lost Time (s)	6.0	6.0	6.0	6.0	6.0	6.0
Lead/Lag						
Lead-Lag Optimize?						
Vehicle Extension (s)	3.0	3.0	3.0	3.0	3.0	3.0
Minimum Gap (s)	3.0	3.0	3.0	3.0	3.0	3.0
Time Before Reduce (s)	0.0	0.0	0.0	0.0	0.0	0.0
Time To Reduce (s)	0.0	0.0	0.0	0.0	0.0	0.0
Recall Mode	None	None	C-Max	C-Max	C-Max	C-Max
Walk Time (s)	7.0	7.0	7.0	7.0		
Flash Dont Walk (s)	24.0	24.0	24.0	24.0		
Pedestrian Calls (#/hr)	0	0	0	0		
v/c Ratio	0.69	0.22	0.31	0.10	0.25	0.27
Control Delay	46.4	30.9	2.9	2.1	8.8	6.8
Queue Delay	0.0	0.0	0.0	0.0	0.0	0.0

Lane Group	WBL	WBR	NBT	NBR	SBL	SBT
Total Delay	46.4	30.9	2.9	2.1	8.8	6.8
Queue Length 50th (ft)	101	26	10	3	21	64
Queue Length 95th (ft)	152	52	83	m12	56	109
Internal Link Dist (ft)	500		2245			611
Turn Bay Length (ft)				225	390	
Base Capacity (vph)	465	416	2328	1041	434	2285
Starvation Cap Reductn	0	0	0	0	0	0
Spillback Cap Reductn	0	0	0	0	0	0
Storage Cap Reductn	0	0	0	0	0	0
Reduced v/c Ratio	0.40	0.13	0.31	0.10	0.25	0.27

Intersection Summary

Area Type: Other
Cycle Length: 90
Actuated Cycle Length: 90
Offset: 56 (62%), Referenced to phase 2:NBT and 6:SBTL, Start of Green
Natural Cycle: 40
Control Type: Actuated-Coordinated
Description: Proposed Signal. Assume ped PB, coordination, signal will go out of coord w/ped calls.Ped FDW reduced for HCM 2010 output.
m Volume for 95th percentile queue is metered by upstream signal.

Splits and Phases: 100: STH 83/Rochester Street & Black Bear Boulvard

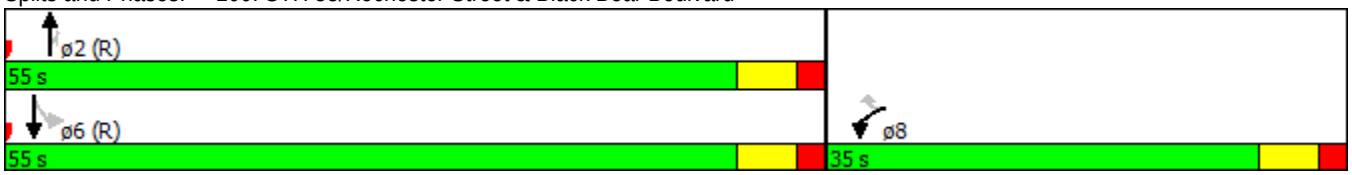

Movement	WBL	WBR	NBT	NBR	SBL	SBT
Lane Configurations						
Volume (veh/h)	165	95	645	175	95	545
Number	3	18	2	12	1	6
Initial Q (Qb), veh	0	0	0	0	0	0
Ped-Bike Adj(A_pbT)	1.00	1.00		1.00	1.00	
Parking Bus, Adj	1.00	1.00	1.00	1.00	1.00	1.00
Adj Sat Flow, veh/h/ln	1520	1520	1810	1810	1776	1776
Adj Flow Rate, veh/h	188	54	733	99	108	619
Adj No. of Lanes	1	1	2	1	1	2
Peak Hour Factor	0.88	0.88	0.88	0.88	0.88	0.88
Percent Heavy Veh, %	25	25	5	5	7	7
Cap, veh/h	225	201	2446	1094	526	2400
Arrive On Green	0.16	0.16	1.00	1.00	0.71	0.71
Sat Flow, veh/h	1448	1292	3529	1538	626	3463
Grp Volume(v), veh/h	188	54	733	99	108	619
Grp Sat Flow(s),veh/h/ln	1448	1292	1719	1538	626	1687
Q Serve(g_s), s	11.3	3.3	0.0	0.0	5.4	5.8
Cycle Q Clear(g_c), s	11.3	3.3	0.0	0.0	5.4	5.8
Prop In Lane	1.00	1.00		1.00	1.00	
Lane Grp Cap(c), veh/h	225	201	2446	1094	526	2400
V/C Ratio(X)	0.84	0.27	0.30	0.09	0.21	0.26
Avail Cap(c_a), veh/h	466	416	2446	1094	526	2400
HCM Platoon Ratio	1.00	1.00	2.00	2.00	1.00	1.00
Upstream Filter(I)	1.00	1.00	0.68	0.68	1.00	1.00
Uniform Delay (d), s/veh	36.9	33.5	0.0	0.0	4.5	4.6
Incr Delay (d2), s/veh	8.0	0.7	0.2	0.1	0.9	0.3
Initial Q Delay(d3),s/veh	0.0	0.0	0.0	0.0	0.0	0.0
%ile BackOfQ(95%),veh/ln	8.7	2.2	0.1	0.1	1.9	5.0
LnGrp Delay(d),s/veh	44.9	34.2	0.2	0.1	5.4	4.9
LnGrp LOS	D	C	A	A	A	A
Approach Vol, veh/h	242		832			727
Approach Delay, s/veh	42.5		0.2			4.9
Approach LOS	D		A			A

Timer	1	2	3	4	5	6	7	8
Assigned Phs		2				6		8
Phs Duration (G+Y+Rc), s		70.0				70.0		20.0
Change Period (Y+Rc), s		6.0				6.0		6.0
Max Green Setting (Gmax), s		49.0				49.0		29.0
Max Q Clear Time (g_c+I1), s		2.0				7.8		13.3
Green Ext Time (p_c), s		15.2				14.6		0.7

Intersection Summary	
HCM 2010 Ctrl Delay	7.8
HCM 2010 LOS	A

Notes

User approved pedestrian interval to be less than phase max green.

Lane Group	EBL	EBT	EBR	WBL	WBT	WBR	NBL	NBT	NBR	SBL	SBT	SBR
Lane Configurations												
Volume (vph)	205	415	375	35	380	175	300	440	75	205	435	70
Ideal Flow (vphpl)	1900	1900	1900	1900	1900	1900	1900	1900	1900	1900	1900	1900
Lane Width (ft)	12	12	12	12	12	12	12	12	12	12	12	12
Grade (%)		0%			0%			0%			0%	
Storage Length (ft)	210		430	215		0	260		55	240		90
Storage Lanes	1		1	1		0	2		1	1		1
Taper Length (ft)	100			100			100			100		
Right Turn on Red			No			No			No			No
Link Speed (mph)		40			40			35			35	
Link Distance (ft)		705			1339			1052			2325	
Travel Time (s)		12.0			22.8			20.5			45.3	
Confl. Peds. (#/hr)												
Confl. Bikes (#/hr)												
Peak Hour Factor	0.81	0.81	0.81	0.81	0.81	0.81	0.81	0.81	0.81	0.81	0.81	0.81
Growth Factor	100%	100%	50%	100%	100%	100%	100%	100%	50%	100%	100%	50%
Heavy Vehicles (%)	5%	5%	5%	5%	5%	5%	10%	10%	10%	7%	7%	7%
Bus Blockages (#/hr)	0	0	0	0	0	0	0	0	0	0	0	0
Parking (#/hr)												
Mid-Block Traffic (%)		0%			0%			0%			0%	
Shared Lane Traffic (%)												
Lane Group Flow (vph)	253	512	231	43	685	0	370	543	46	253	537	43
Turn Type	pm+pt	NA	Perm	pm+pt	NA		Prot	NA	Perm	D.P+P	NA	Perm
Protected Phases	7	4		3	8		1	6		5	2	
Permitted Phases	4		4	8					6	6		2
Detector Phase	7	4	4	3	8		1	6	6	5	2	2
Switch Phase												
Minimum Initial (s)	6.0	8.0	8.0	6.0	8.0		8.0	15.0	15.0	6.0	15.0	15.0
Minimum Split (s)	10.5	14.6	14.6	10.5	14.6		12.5	21.4	21.4	10.5	21.4	21.4
Total Split (s)	15.7	37.3	37.3	10.5	32.1		18.0	26.0	26.0	16.2	24.2	24.2
Total Split (%)	17.4%	41.4%	41.4%	11.7%	35.7%		20.0%	28.9%	28.9%	18.0%	26.9%	26.9%
Maximum Green (s)	11.2	30.7	30.7	6.0	25.5		13.5	19.6	19.6	11.7	17.8	17.8
Yellow Time (s)	3.5	4.0	4.0	3.5	4.0		3.5	3.9	3.9	3.5	3.9	3.9
All-Red Time (s)	1.0	2.6	2.6	1.0	2.6		1.0	2.5	2.5	1.0	2.5	2.5
Lost Time Adjust (s)	0.0	0.0	0.0	0.0	0.0		0.0	0.0	0.0	0.0	0.0	0.0
Total Lost Time (s)	4.5	6.6	6.6	4.5	6.6		4.5	6.4	6.4	4.5	6.4	6.4
Lead/Lag	Lead	Lag	Lag	Lead	Lag		Lead	Lag	Lag	Lead	Lag	Lag
Lead-Lag Optimize?												
Vehicle Extension (s)	1.5	1.5	1.5	1.5	1.5		1.5	4.3	4.3	1.5	3.4	3.4
Minimum Gap (s)	1.5	1.5	1.5	1.5	1.5		1.5	2.0	2.0	1.5	2.0	2.0
Time Before Reduce (s)	20.0	30.0	30.0	20.0	30.0		20.0	19.0	19.0	20.0	20.0	20.0
Time To Reduce (s)	0.0	0.0	0.0	0.0	0.0		0.0	21.0	21.0	0.0	20.0	20.0
Recall Mode	None	None	None	None	None		None	C-Max	C-Max	None	C-Max	C-Max
Walk Time (s)		7.0	7.0		7.0			7.0	7.0		7.0	7.0
Flash Dont Walk (s)		35.0	35.0		37.0			32.0	32.0		37.0	37.0
Pedestrian Calls (#/hr)		0	0		0			0	0		0	0
v/c Ratio	0.78	0.80	0.43	0.16	0.83		0.82	0.63	0.12	0.70	0.66	0.12
Control Delay	26.6	26.9	18.3	14.9	41.2		53.7	34.6	29.1	29.5	29.9	23.7
Queue Delay	0.0	0.0	0.0	0.0	0.0		0.0	0.0	0.0	0.0	0.0	0.0

Lane Group	EBL	EBT	EBR	WBL	WBT	WBR	NBL	NBT	NBR	SBL	SBT	SBR
Total Delay	26.6	26.9	18.3	14.9	41.2		53.7	34.6	29.1	29.5	29.9	23.7
Queue Length 50th (ft)	45	225	76	13	187		105	151	21	72	159	16
Queue Length 95th (ft)	m65	m259	m88	27	217		136	185	45	142	125	33
Internal Link Dist (ft)		625			1259			972			2245	
Turn Bay Length (ft)	210		430	215			260		55	240		90
Base Capacity (vph)	329	641	544	261	928		477	862	385	378	814	364
Starvation Cap Reductn	0	0	0	0	0		0	0	0	0	0	0
Spillback Cap Reductn	0	0	0	0	0		0	0	0	0	0	0
Storage Cap Reductn	0	0	0	0	0		0	0	0	0	0	0
Reduced v/c Ratio	0.77	0.80	0.42	0.16	0.74		0.78	0.63	0.12	0.67	0.66	0.12

Intersection Summary

Area Type: Other
Cycle Length: 90
Actuated Cycle Length: 90
Offset: 0 (0%), Referenced to phase 2:SBT and 6:NBSB, Start of Green
Natural Cycle: 80
Control Type: Actuated-Coordinated
Description: PB all app. Min splits reduced for coordination CL. Signal will go out of coord w/ped calls. SB LT FYA.
m Volume for 95th percentile queue is metered by upstream signal.

Splits and Phases: 200: STH 83/Rochester Street & CTH N

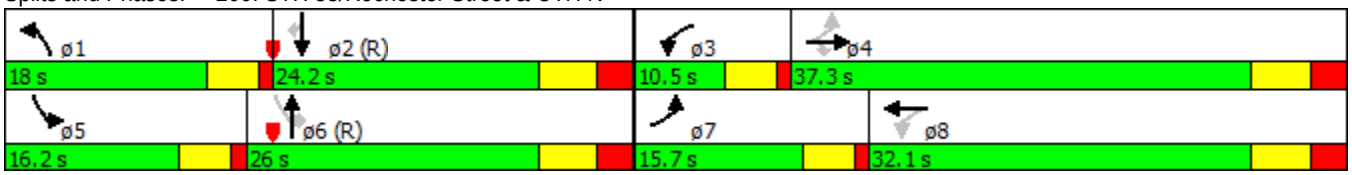

Movement	EBL	EBT	EBR	WBL	WBT	WBR	NBL	NBT	NBR	SBL	SBT	SBR
Lane Configurations												
Volume (veh/h)	205	415	375	35	380	175	300	440	75	205	435	70
Number	7	4	14	3	8	18	1	6	16	5	2	12
Initial Q (Qb), veh	0	0	0	0	0	0	0	0	0	0	0	0
Ped-Bike Adj(A_pbT)	1.00		1.00	1.00		1.00	1.00		1.00	1.00		1.00
Parking Bus, Adj	1.00	1.00	1.00	1.00	1.00	1.00	1.00	1.00	1.00	1.00	1.00	1.00
Adj Sat Flow, veh/h/ln	1810	1810	1810	1810	1810	1900	1727	1727	1727	1776	1776	1776
Adj Flow Rate, veh/h	253	512	231	43	469	216	370	543	46	253	537	43
Adj No. of Lanes	1	1	1	1	2	0	2	2	1	1	2	1
Peak Hour Factor	0.81	0.81	0.81	0.81	0.81	0.81	0.81	0.81	0.81	0.81	0.81	0.81
Percent Heavy Veh, %	5	5	5	5	5	5	10	10	10	7	7	7
Cap, veh/h	329	586	498	195	558	255	435	847	379	387	848	379
Arrive On Green	0.12	0.32	0.32	0.04	0.24	0.24	0.14	0.26	0.26	0.13	0.25	0.25
Sat Flow, veh/h	1723	1810	1538	1723	2294	1049	3191	3282	1468	1691	3374	1509
Grp Volume(v), veh/h	253	512	231	43	351	334	370	543	46	253	537	43
Grp Sat Flow(s),veh/h/ln	1723	1810	1538	1723	1719	1624	1596	1641	1468	1691	1687	1509
Q Serve(g_s), s	9.4	24.0	10.8	1.6	17.5	17.7	10.2	13.2	2.2	9.7	12.8	2.0
Cycle Q Clear(g_c), s	9.4	24.0	10.8	1.6	17.5	17.7	10.2	13.2	2.2	9.7	12.8	2.0
Prop In Lane	1.00		1.00	1.00		0.65	1.00		1.00	1.00		1.00
Lane Grp Cap(c), veh/h	329	586	498	195	418	395	435	847	379	387	848	379
V/C Ratio(X)	0.77	0.87	0.46	0.22	0.84	0.85	0.85	0.64	0.12	0.65	0.63	0.11
Avail Cap(c_a), veh/h	329	617	525	234	487	460	479	847	379	387	848	379
HCM Platoon Ratio	1.00	1.00	1.00	1.00	1.00	1.00	1.00	1.00	1.00	1.00	1.00	1.00
Upstream Filter(I)	1.00	1.00	1.00	1.00	1.00	1.00	1.00	1.00	1.00	0.94	0.94	0.94
Uniform Delay (d), s/veh	22.5	28.7	24.2	25.1	32.4	32.4	38.0	29.7	25.6	21.3	30.0	26.0
Incr Delay (d2), s/veh	9.6	12.0	0.2	0.2	9.6	10.8	11.6	3.7	0.7	2.9	3.4	0.6
Initial Q Delay(d3),s/veh	0.0	0.0	0.0	0.0	0.0	0.0	0.0	0.0	0.0	0.0	0.0	0.0
%ile BackOfQ(95%),veh/ln	9.2	20.0	8.1	1.4	14.4	14.0	8.9	10.5	1.7	8.2	10.3	1.6
LnGrp Delay(d),s/veh	32.1	40.7	24.5	25.3	41.9	43.2	49.6	33.4	26.2	24.2	33.4	26.5
LnGrp LOS	C	D	C	C	D	D	D	C	C	C	C	C
Approach Vol, veh/h		996			728			959			833	
Approach Delay, s/veh		34.8			41.5			39.3			30.2	
Approach LOS		C			D			D			C	

Timer	1	2	3	4	5	6	7	8
Assigned Phs	1	2	3	4	5	6	7	8
Phs Duration (G+Y+Rc), s	16.8	29.0	8.5	35.7	16.2	29.6	15.7	28.5
Change Period (Y+Rc), s	4.5	6.4	4.5	6.6	4.5	6.4	4.5	6.6
Max Green Setting (Gmax), s	13.5	17.8	6.0	30.7	11.7	19.6	11.2	25.5
Max Q Clear Time (g_c+I1), s	12.2	14.8	3.6	26.0	11.7	15.2	11.4	19.7
Green Ext Time (p_c), s	0.1	2.2	0.0	1.9	0.0	3.1	0.0	2.2

Intersection Summary	
HCM 2010 Ctrl Delay	36.3
HCM 2010 LOS	D

Notes

User approved pedestrian interval to be less than phase max green.

Lane Group	EBL	EBT	EBR	WBL	WBT	WBR	NBL	NBT	NBR	SBL	SBT	SBR
Lane Configurations												
Volume (vph)	1	680	35	90	650	10	65	1	275	40	1	1
Ideal Flow (vphpl)	1900	1900	1900	1900	1900	1900	1900	1900	1900	1900	1900	1900
Lane Width (ft)	12	12	12	12	12	12	12	12	12	12	12	12
Grade (%)		0%			0%			0%			0%	
Storage Length (ft)	200		0	100		0	0		100	0		0
Storage Lanes	1		0	1		0	0		1	0		0
Taper Length (ft)	100			100			100			100		
Right Turn on Red			No			No			No			No
Link Speed (mph)		40			40			25			25	
Link Distance (ft)		1050			1554			303			468	
Travel Time (s)		17.9			26.5			8.3			12.8	
Confl. Peds. (#/hr)												
Confl. Bikes (#/hr)												
Peak Hour Factor	0.72	0.72	0.72	0.72	0.72	0.72	0.72	0.72	0.72	0.72	0.72	0.72
Growth Factor	100%	100%	100%	100%	100%	100%	100%	100%	50%	100%	100%	100%
Heavy Vehicles (%)	2%	2%	2%	5%	5%	5%	12%	12%	12%	2%	2%	2%
Bus Blockages (#/hr)	0	0	0	0	0	0	0	0	0	0	0	0
Parking (#/hr)												
Mid-Block Traffic (%)		0%			0%			0%			0%	
Shared Lane Traffic (%)												
Lane Group Flow (vph)	1	993	0	125	917	0	0	91	191	0	58	0
Turn Type	Perm	NA		pm+pt	NA		Perm	NA	Perm	Perm	NA	
Protected Phases		6		5	2			8			4	
Permitted Phases	6			2			8		8	4		
Detector Phase	6	6		5	2		8	8	8	4	4	
Switch Phase												
Minimum Initial (s)	15.0	15.0		6.0	7.0		6.0	6.0	6.0	6.0	6.0	
Minimum Split (s)	25.7	25.7		11.7	25.7		24.0	24.0	24.0	24.0	24.0	
Total Split (s)	54.0	54.0		12.0	66.0		24.0	24.0	24.0	24.0	24.0	
Total Split (%)	60.0%	60.0%		13.3%	73.3%		26.7%	26.7%	26.7%	26.7%	26.7%	
Maximum Green (s)	48.3	48.3		6.3	60.3		20.0	20.0	20.0	20.0	20.0	
Yellow Time (s)	4.5	4.5		4.5	4.5		3.0	3.0	3.0	3.0	3.0	
All-Red Time (s)	1.2	1.2		1.2	1.2		1.0	1.0	1.0	1.0	1.0	
Lost Time Adjust (s)	0.0	0.0		0.0	0.0			0.0	0.0		0.0	
Total Lost Time (s)	5.7	5.7		5.7	5.7			4.0	4.0		4.0	
Lead/Lag	Lag	Lag		Lead								
Lead-Lag Optimize?												
Vehicle Extension (s)	5.5	5.5		4.5	5.5		3.0	3.0	3.0	3.0	3.0	
Minimum Gap (s)	2.0	2.0		0.2	2.0		1.5	1.5	1.5	1.5	1.5	
Time Before Reduce (s)	0.0	0.0		0.0	0.0		0.0	0.0	0.0	0.0	0.0	
Time To Reduce (s)	0.0	0.0		0.0	0.0		0.0	0.0	0.0	0.0	0.0	
Recall Mode	C-Max	C-Max		None	C-Max		None	None	None	None	None	
Walk Time (s)	6.0	6.0			6.0		6.0	6.0	6.0	6.0	6.0	
Flash Dont Walk (s)	14.0	14.0			14.0		14.0	14.0	14.0	14.0	14.0	
Pedestrian Calls (#/hr)	0	0			0		0	0	0	0	0	
v/c Ratio	0.00	0.93		0.62	0.71			0.41	0.73		0.25	
Control Delay	10.0	35.1		36.8	9.3			37.4	51.0		32.7	
Queue Delay	0.0	0.0		0.0	0.0			0.0	0.0		0.0	

Lane Group	EBL	EBT	EBR	WBL	WBT	WBR	NBL	NBT	NBR	SBL	SBT	SBR
Total Delay	10.0	35.1		36.8	9.3			37.4	51.0		32.7	
Queue Length 50th (ft)	0	489		36	101			46	102		28	
Queue Length 95th (ft)	2	486		m63	102			69	129		48	
Internal Link Dist (ft)		970			1474			223			388	
Turn Bay Length (ft)	200			100					100			
Base Capacity (vph)	287	1069		200	1284			270	320		289	
Starvation Cap Reductn	0	0		0	0			0	0		0	
Spillback Cap Reductn	0	0		0	0			0	0		0	
Storage Cap Reductn	0	0		0	0			0	0		0	
Reduced v/c Ratio	0.00	0.93		0.63	0.71			0.34	0.60		0.20	

Intersection Summary

Area Type: Other
Cycle Length: 90
Actuated Cycle Length: 90
Offset: 75 (83%), Referenced to phase 2:WBTL and 6:EBTL, Start of Green
Natural Cycle: 90
Control Type: Actuated-Coordinated
Description: TOD plans in peak school hours, coord w/ STH83/CTH NN Ped PB. No Xwalks.
m Volume for 95th percentile queue is metered by upstream signal.

Splits and Phases: 300: HS Dwy/Fairwinds Boulevard & CTH N

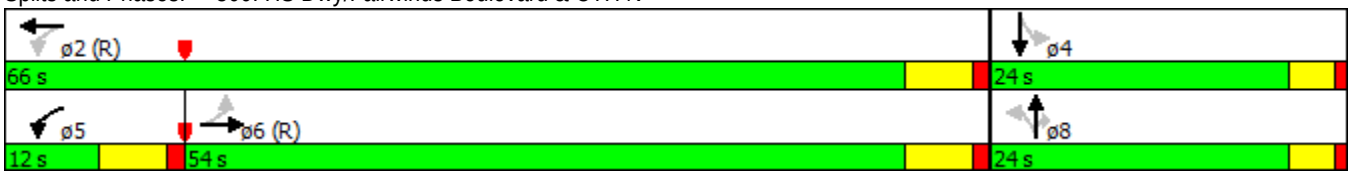

Movement	EBL	EBT	EBR	WBL	WBT	WBR	NBL	NBT	NBR	SBL	SBT	SBR
Lane Configurations												
Volume (veh/h)	1	680	35	90	650	10	65	1	275	40	1	1
Number	1	6	16	5	2	12	3	8	18	7	4	14
Initial Q (Qb), veh	0	0	0	0	0	0	0	0	0	0	0	0
Ped-Bike Adj(A_pbT)	1.00		1.00	1.00		1.00	1.00		1.00	1.00		1.00
Parking Bus, Adj	1.00	1.00	1.00	1.00	1.00	1.00	1.00	1.00	1.00	1.00	1.00	1.00
Adj Sat Flow, veh/h/ln	1863	1863	1900	1810	1810	1900	1900	1696	1696	1900	1863	1900
Adj Flow Rate, veh/h	1	944	49	125	903	14	90	1	191	56	1	1
Adj No. of Lanes	1	1	0	1	1	0	0	1	1	0	1	0
Peak Hour Factor	0.72	0.72	0.72	0.72	0.72	0.72	0.72	0.72	0.72	0.72	0.72	0.72
Percent Heavy Veh, %	2	2	2	5	5	5	12	12	12	2	2	2
Cap, veh/h	357	1063	55	270	1301	20	313	3	231	206	4	2
Arrive On Green	0.61	0.61	0.61	0.06	0.73	0.73	0.16	0.16	0.16	0.16	0.16	0.16
Sat Flow, veh/h	607	1756	91	1723	1777	28	1462	19	1442	795	23	14
Grp Volume(v), veh/h	1	0	993	125	0	917	91	0	191	58	0	0
Grp Sat Flow(s),veh/h/ln	607	0	1847	1723	0	1805	1481	0	1442	832	0	0
Q Serve(g_s), s	0.1	0.0	41.3	2.2	0.0	24.9	0.0	0.0	11.5	4.0	0.0	0.0
Cycle Q Clear(g_c), s	13.5	0.0	41.3	2.2	0.0	24.9	4.5	0.0	11.5	8.5	0.0	0.0
Prop In Lane	1.00		0.05	1.00		0.02	0.99		1.00	0.97		0.02
Lane Grp Cap(c), veh/h	357	0	1118	270	0	1322	316	0	231	212	0	0
V/C Ratio(X)	0.00	0.00	0.89	0.46	0.00	0.69	0.29	0.00	0.83	0.27	0.00	0.00
Avail Cap(c_a), veh/h	357	0	1118	281	0	1322	397	0	320	286	0	0
HCM Platoon Ratio	1.00	1.00	1.00	1.00	1.00	1.00	1.00	1.00	1.00	1.00	1.00	1.00
Upstream Filter(I)	1.00	0.00	1.00	1.00	0.00	1.00	1.00	0.00	1.00	1.00	0.00	0.00
Uniform Delay (d), s/veh	13.3	0.0	15.2	18.1	0.0	6.6	33.7	0.0	36.6	37.3	0.0	0.0
Incr Delay (d2), s/veh	0.0	0.0	10.6	2.1	0.0	3.0	0.5	0.0	12.0	0.7	0.0	0.0
Initial Q Delay(d3),s/veh	0.0	0.0	0.0	0.0	0.0	0.0	0.0	0.0	0.0	0.0	0.0	0.0
%ile BackOfQ(95%),veh/ln	0.0	0.0	32.0	3.7	0.0	19.0	3.7	0.0	9.2	2.5	0.0	0.0
LnGrp Delay(d),s/veh	13.4	0.0	25.8	20.2	0.0	9.6	34.2	0.0	48.6	38.0	0.0	0.0
LnGrp LOS	B		C	C		A	C		D	D		
Approach Vol, veh/h		994			1042			282			58	
Approach Delay, s/veh		25.7			10.9			43.9			38.0	
Approach LOS		C			B			D			D	

Timer	1	2	3	4	5	6	7	8
Assigned Phs		2		4	5	6		8
Phs Duration (G+Y+Rc), s		71.6		18.4	11.4	60.2		18.4
Change Period (Y+Rc), s		* 5.7		4.0	* 5.7	* 5.7		4.0
Max Green Setting (Gmax), s		* 60		20.0	* 6.3	* 48		20.0
Max Q Clear Time (g_c+I1), s		26.9		10.5	4.2	43.3		13.5
Green Ext Time (p_c), s		30.3		1.1	0.1	4.8		0.8

Intersection Summary	
HCM 2010 Ctrl Delay	21.7
HCM 2010 LOS	C

Notes

* HCM 2010 computational engine requires equal clearance times for the phases crossing the barrier.

Lane Group	WBL	WBR	NBT	NBR	SBL	SBT
Lane Configurations						
Volume (vph)	180	85	695	145	95	745
Ideal Flow (vphpl)	1900	1900	1900	1900	1900	1900
Lane Width (ft)	12	12	12	12	12	12
Grade (%)	0%		0%			0%
Storage Length (ft)	0	0		225	390	
Storage Lanes	1	1		1	1	
Taper Length (ft)	100				100	
Right Turn on Red		No		No		
Link Speed (mph)	25		35			35
Link Distance (ft)	580		2325			691
Travel Time (s)	15.8		45.3			13.5
Confl. Peds. (#/hr)						
Confl. Bikes (#/hr)						
Peak Hour Factor	0.92	0.92	0.92	0.92	0.92	0.92
Growth Factor	100%	50%	100%	50%	100%	100%
Heavy Vehicles (%)	2%	2%	3%	3%	4%	4%
Bus Blockages (#/hr)	0	0	0	0	0	0
Parking (#/hr)						
Mid-Block Traffic (%)	0%		0%			0%
Shared Lane Traffic (%)						
Lane Group Flow (vph)	196	46	755	79	103	810
Turn Type	Prot	Perm	NA	Perm	Perm	NA
Protected Phases	8		2			6
Permitted Phases		8		2	6	
Detector Phase	8	8	2	2	6	6
Switch Phase						
Minimum Initial (s)	10.0	10.0	15.0	15.0	15.0	15.0
Minimum Split (s)	16.0	16.0	21.0	21.0	21.0	21.0
Total Split (s)	28.0	28.0	47.0	47.0	47.0	47.0
Total Split (%)	37.3%	37.3%	62.7%	62.7%	62.7%	62.7%
Maximum Green (s)	22.0	22.0	41.0	41.0	41.0	41.0
Yellow Time (s)	4.0	4.0	4.0	4.0	4.0	4.0
All-Red Time (s)	2.0	2.0	2.0	2.0	2.0	2.0
Lost Time Adjust (s)	0.0	0.0	0.0	0.0	0.0	0.0
Total Lost Time (s)	6.0	6.0	6.0	6.0	6.0	6.0
Lead/Lag						
Lead-Lag Optimize?						
Vehicle Extension (s)	3.0	3.0	3.0	3.0	3.0	3.0
Minimum Gap (s)	3.0	3.0	3.0	3.0	3.0	3.0
Time Before Reduce (s)	0.0	0.0	0.0	0.0	0.0	0.0
Time To Reduce (s)	0.0	0.0	0.0	0.0	0.0	0.0
Recall Mode	None	None	C-Max	C-Max	C-Max	C-Max
Walk Time (s)	7.0	7.0	7.0	7.0		
Flash Dont Walk (s)	24.0	24.0	24.0	24.0		
Pedestrian Calls (#/hr)	0	0	0	0		
v/c Ratio	0.60	0.16	0.33	0.08	0.24	0.36
Control Delay	35.4	25.4	5.4	5.2	8.1	6.8
Queue Delay	0.0	0.0	0.0	0.0	0.0	0.0

Lane Group	WBL	WBR	NBT	NBR	SBL	SBT
Total Delay	35.4	25.4	5.4	5.2	8.1	6.8
Queue Length 50th (ft)	85	18	64	12	17	75
Queue Length 95th (ft)	137	42	m84	m24	48	130
Internal Link Dist (ft)	500		2245			611
Turn Bay Length (ft)				225	390	
Base Capacity (vph)	519	464	2296	1027	425	2274
Starvation Cap Reductn	0	0	0	0	0	0
Spillback Cap Reductn	0	0	0	0	0	0
Storage Cap Reductn	0	0	0	0	0	0
Reduced v/c Ratio	0.38	0.10	0.33	0.08	0.24	0.36

Intersection Summary

Area Type: Other
Cycle Length: 75
Actuated Cycle Length: 75
Offset: 34 (45%), Referenced to phase 2:NBT and 6:SBTL, Start of Green
Natural Cycle: 40
Control Type: Actuated-Coordinated
Description: Proposed Signal. Assume ped PB, coordination, signal will go out of coord w/ped calls.Ped FDW reduced for HCM 2010 output.
m Volume for 95th percentile queue is metered by upstream signal.

Splits and Phases: 100: STH 83/Rochester Street & Black Bear Boulvard

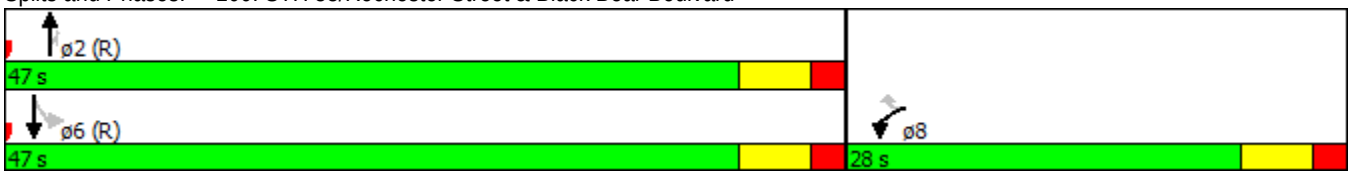

Movement	WBL	WBR	NBT	NBR	SBL	SBT
Lane Configurations						
Volume (veh/h)	180	85	695	145	95	745
Number	3	18	2	12	1	6
Initial Q (Qb), veh	0	0	0	0	0	0
Ped-Bike Adj(A_pbT)	1.00	1.00		1.00	1.00	
Parking Bus, Adj	1.00	1.00	1.00	1.00	1.00	1.00
Adj Sat Flow, veh/h/ln	1863	1863	1845	1845	1827	1827
Adj Flow Rate, veh/h	196	46	755	79	103	810
Adj No. of Lanes	1	1	2	1	1	2
Peak Hour Factor	0.92	0.92	0.92	0.92	0.92	0.92
Percent Heavy Veh, %	2	2	3	3	4	4
Cap, veh/h	248	222	2453	1098	546	2430
Arrive On Green	0.14	0.14	1.00	1.00	0.70	0.70
Sat Flow, veh/h	1774	1583	3597	1568	643	3563
Grp Volume(v), veh/h	196	46	755	79	103	810
Grp Sat Flow(s),veh/h/ln	1774	1583	1752	1568	643	1736
Q Serve(g_s), s	8.0	1.9	0.0	0.0	4.3	6.8
Cycle Q Clear(g_c), s	8.0	1.9	0.0	0.0	4.3	6.8
Prop In Lane	1.00	1.00		1.00	1.00	
Lane Grp Cap(c), veh/h	248	222	2453	1098	546	2430
V/C Ratio(X)	0.79	0.21	0.31	0.07	0.19	0.33
Avail Cap(c_a), veh/h	520	464	2453	1098	546	2430
HCM Platoon Ratio	1.00	1.00	2.00	2.00	1.00	1.00
Upstream Filter(I)	1.00	1.00	0.87	0.87	1.00	1.00
Uniform Delay (d), s/veh	31.2	28.6	0.0	0.0	4.0	4.4
Incr Delay (d2), s/veh	5.5	0.5	0.3	0.1	0.8	0.4
Initial Q Delay(d3),s/veh	0.0	0.0	0.0	0.0	0.0	0.0
%ile BackOfQ(95%),veh/ln	7.7	1.6	0.2	0.1	1.5	6.1
LnGrp Delay(d),s/veh	36.7	29.0	0.3	0.1	4.8	4.8
LnGrp LOS	D	C	A	A	A	A
Approach Vol, veh/h	242		834			913
Approach Delay, s/veh	35.3		0.3			4.8
Approach LOS	D		A			A

Timer	1	2	3	4	5	6	7	8
Assigned Phs		2				6		8
Phs Duration (G+Y+Rc), s		58.5				58.5		16.5
Change Period (Y+Rc), s		6.0				6.0		6.0
Max Green Setting (Gmax), s		41.0				41.0		22.0
Max Q Clear Time (g_c+I1), s		2.0				8.8		10.0
Green Ext Time (p_c), s		17.0				15.6		0.6

Intersection Summary	
HCM 2010 Ctrl Delay	6.6
HCM 2010 LOS	A

Notes

User approved pedestrian interval to be less than phase max green.

Lane Group	EBL	EBT	EBR	WBL	WBT	WBR	NBL	NBT	NBR	SBL	SBT	SBR
Lane Configurations												
Volume (vph)	130	255	310	100	385	210	380	500	80	190	520	215
Ideal Flow (vphpl)	1900	1900	1900	1900	1900	1900	1900	1900	1900	1900	1900	1900
Lane Width (ft)	12	12	12	12	12	12	12	12	12	12	12	12
Grade (%)		0%			0%			0%			0%	
Storage Length (ft)	210		430	215		0	260		55	240		90
Storage Lanes	1		1	1		0	2		1	1		1
Taper Length (ft)	100			100			100			100		
Right Turn on Red			No			No			No			No
Link Speed (mph)		40			40			35			35	
Link Distance (ft)		705			1339			1052			2325	
Travel Time (s)		12.0			22.8			20.5			45.3	
Confl. Peds. (#/hr)												
Confl. Bikes (#/hr)												
Peak Hour Factor	0.93	0.93	0.93	0.93	0.93	0.93	0.93	0.93	0.93	0.93	0.93	0.93
Growth Factor	100%	100%	50%	100%	100%	100%	100%	100%	50%	100%	100%	50%
Heavy Vehicles (%)	3%	3%	3%	1%	1%	1%	2%	2%	2%	3%	3%	3%
Bus Blockages (#/hr)	0	0	0	0	0	0	0	0	0	0	0	0
Parking (#/hr)												
Mid-Block Traffic (%)		0%			0%			0%			0%	
Shared Lane Traffic (%)												
Lane Group Flow (vph)	140	274	167	108	640	0	409	538	43	204	559	116
Turn Type	pm+pt	NA	Perm	pm+pt	NA		Prot	NA	Perm	D.P+P	NA	Perm
Protected Phases	7	4		3	8		1	6		5	2	
Permitted Phases	4		4	8					6	6		2
Detector Phase	7	4	4	3	8		1	6	6	5	2	2
Switch Phase												
Minimum Initial (s)	6.0	8.0	8.0	6.0	8.0		8.0	15.0	15.0	6.0	15.0	15.0
Minimum Split (s)	10.5	14.6	14.6	10.5	14.6		12.5	21.4	21.4	10.5	21.4	21.4
Total Split (s)	10.5	24.1	24.1	10.5	24.1		16.3	28.1	28.1	12.3	24.1	24.1
Total Split (%)	14.0%	32.1%	32.1%	14.0%	32.1%		21.7%	37.5%	37.5%	16.4%	32.1%	32.1%
Maximum Green (s)	6.0	17.5	17.5	6.0	17.5		11.8	21.7	21.7	7.8	17.7	17.7
Yellow Time (s)	3.5	4.0	4.0	3.5	4.0		3.5	3.9	3.9	3.5	3.9	3.9
All-Red Time (s)	1.0	2.6	2.6	1.0	2.6		1.0	2.5	2.5	1.0	2.5	2.5
Lost Time Adjust (s)	0.0	0.0	0.0	0.0	0.0		0.0	0.0	0.0	0.0	0.0	0.0
Total Lost Time (s)	4.5	6.6	6.6	4.5	6.6		4.5	6.4	6.4	4.5	6.4	6.4
Lead/Lag	Lead	Lag	Lag	Lead	Lag		Lead	Lag	Lag	Lead	Lag	Lag
Lead-Lag Optimize?												
Vehicle Extension (s)	1.5	1.5	1.5	1.5	1.5		1.5	4.3	4.3	1.5	3.4	3.4
Minimum Gap (s)	1.5	1.5	1.5	1.5	1.5		1.5	2.0	2.0	1.5	2.0	2.0
Time Before Reduce (s)	20.0	30.0	30.0	20.0	30.0		20.0	19.0	19.0	20.0	20.0	20.0
Time To Reduce (s)	0.0	0.0	0.0	0.0	0.0		0.0	21.0	21.0	0.0	20.0	20.0
Recall Mode	None	None	None	None	None		None	C-Max	C-Max	None	C-Max	C-Max
Walk Time (s)		7.0	7.0		7.0			7.0	7.0		7.0	7.0
Flash Dont Walk (s)		35.0	35.0		37.0			32.0	32.0		37.0	37.0
Pedestrian Calls (#/hr)		0	0		0			0	0		0	0
v/c Ratio	0.58	0.68	0.49	0.32	0.86		0.80	0.45	0.08	0.47	0.56	0.26
Control Delay	25.7	35.0	30.2	17.6	41.4		43.9	22.4	20.1	12.1	21.4	19.2
Queue Delay	0.0	0.0	0.0	0.0	0.0		0.0	0.0	0.0	0.0	0.0	0.0

Lane Group	EBL	EBT	EBR	WBL	WBT	WBR	NBL	NBT	NBR	SBL	SBT	SBR
Total Delay	25.7	35.0	30.2	17.6	41.4		43.9	22.4	20.1	12.1	21.4	19.2
Queue Length 50th (ft)	32	119	70	31	148		94	109	15	42	131	33
Queue Length 95th (ft)	85	157	103	62	#228		#155	156	37	64	115	55
Internal Link Dist (ft)		625			1259			972			2245	
Turn Bay Length (ft)	210		430	215			260		55	240		90
Base Capacity (vph)	243	430	365	339	789		540	1190	533	446	1002	448
Starvation Cap Reductn	0	0	0	0	0		0	0	0	0	0	0
Spillback Cap Reductn	0	0	0	0	0		0	0	0	0	0	0
Storage Cap Reductn	0	0	0	0	0		0	0	0	0	0	0
Reduced v/c Ratio	0.58	0.64	0.46	0.32	0.81		0.76	0.45	0.08	0.46	0.56	0.26

Intersection Summary

Area Type: Other
Cycle Length: 75
Actuated Cycle Length: 75
Offset: 0 (0%), Referenced to phase 2:SBT and 6:NBSB, Start of Green
Natural Cycle: 70
Control Type: Actuated-Coordinated
Description: PB all app. Min splits reduced for coordination CL. Signal will go out of coord w/ped calls. SB LT FYA.
95th percentile volume exceeds capacity, queue may be longer.
Queue shown is maximum after two cycles.

Splits and Phases: 200: STH 83/Rochester Street & CTH N

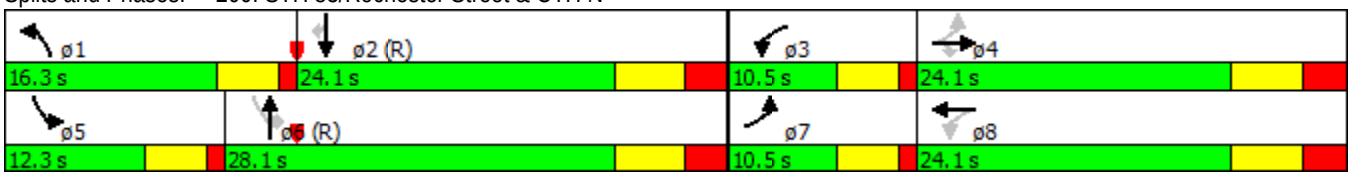

Movement	EBL	EBT	EBR	WBL	WBT	WBR	NBL	NBT	NBR	SBL	SBT	SBR
Lane Configurations												
Volume (veh/h)	130	255	310	100	385	210	380	500	80	190	520	215
Number	7	4	14	3	8	18	1	6	16	5	2	12
Initial Q (Qb), veh	0	0	0	0	0	0	0	0	0	0	0	0
Ped-Bike Adj(A_pbT)	1.00		1.00	1.00		1.00	1.00		1.00	1.00		1.00
Parking Bus, Adj	1.00	1.00	1.00	1.00	1.00	1.00	1.00	1.00	1.00	1.00	1.00	1.00
Adj Sat Flow, veh/h/ln	1845	1845	1845	1881	1881	1900	1863	1863	1863	1845	1845	1845
Adj Flow Rate, veh/h	140	274	167	108	414	226	409	538	43	204	559	116
Adj No. of Lanes	1	1	1	1	2	0	2	2	1	1	2	1
Peak Hour Factor	0.93	0.93	0.93	0.93	0.93	0.93	0.93	0.93	0.93	0.93	0.93	0.93
Percent Heavy Veh, %	3	3	3	1	1	1	2	2	2	3	3	3
Cap, veh/h	265	415	353	310	486	262	493	1088	487	427	935	418
Arrive On Green	0.08	0.22	0.22	0.07	0.22	0.22	0.14	0.31	0.31	0.10	0.27	0.27
Sat Flow, veh/h	1757	1845	1568	1792	2243	1211	3442	3539	1583	1757	3505	1568
Grp Volume(v), veh/h	140	274	167	108	329	311	409	538	43	204	559	116
Grp Sat Flow(s),veh/h/ln	1757	1845	1568	1792	1787	1667	1721	1770	1583	1757	1752	1568
Q Serve(g_s), s	4.6	10.1	6.9	3.4	13.3	13.5	8.7	9.3	1.4	5.8	10.4	4.4
Cycle Q Clear(g_c), s	4.6	10.1	6.9	3.4	13.3	13.5	8.7	9.3	1.4	5.8	10.4	4.4
Prop In Lane	1.00		1.00	1.00		0.73	1.00		1.00	1.00		1.00
Lane Grp Cap(c), veh/h	265	415	353	310	387	361	493	1088	487	427	935	418
V/C Ratio(X)	0.53	0.66	0.47	0.35	0.85	0.86	0.83	0.49	0.09	0.48	0.60	0.28
Avail Cap(c_a), veh/h	265	430	366	325	417	389	541	1088	487	429	935	418
HCM Platoon Ratio	1.00	1.00	1.00	1.00	1.00	1.00	1.00	1.00	1.00	1.00	1.00	1.00
Upstream Filter(I)	1.00	1.00	1.00	1.00	1.00	1.00	1.00	1.00	1.00	0.92	0.92	0.92
Uniform Delay (d), s/veh	21.6	26.5	25.2	20.9	28.2	28.3	31.2	21.2	18.5	15.5	24.0	21.8
Incr Delay (d2), s/veh	1.0	2.7	0.4	0.2	13.5	15.7	8.7	1.6	0.4	0.3	2.6	1.5
Initial Q Delay(d3),s/veh	0.0	0.0	0.0	0.0	0.0	0.0	0.0	0.0	0.0	0.0	0.0	0.0
%ile BackOfQ(95%),veh/ln	4.1	9.3	5.4	3.1	12.6	12.4	8.2	8.4	1.2	5.0	9.0	3.7
LnGrp Delay(d),s/veh	22.6	29.2	25.6	21.2	41.7	43.9	40.0	22.8	18.8	15.8	26.6	23.3
LnGrp LOS	C	C	C	C	D	D	D	C	B	B	C	C
Approach Vol, veh/h		581			748			990			879	
Approach Delay, s/veh		26.6			39.7			29.7			23.6	
Approach LOS		C			D			C			C	

Timer	1	2	3	4	5	6	7	8
Assigned Phs	1	2	3	4	5	6	7	8
Phs Duration (G+Y+Rc), s	15.3	26.4	9.9	23.5	12.2	29.5	10.5	22.8
Change Period (Y+Rc), s	4.5	6.4	4.5	6.6	4.5	6.4	4.5	6.6
Max Green Setting (Gmax), s	11.8	17.7	6.0	17.5	7.8	21.7	6.0	17.5
Max Q Clear Time (g_c+I1), s	10.7	12.4	5.4	12.1	7.8	11.3	6.6	15.5
Green Ext Time (p_c), s	0.1	3.7	0.0	1.6	0.0	6.5	0.0	0.8

Intersection Summary	
HCM 2010 Ctrl Delay	29.8
HCM 2010 LOS	C

Notes

User approved pedestrian interval to be less than phase max green.

Lane Group	EBL	EBT	EBR	WBL	WBT	WBR	NBL	NBT	NBR	SBL	SBT	SBR
Lane Configurations												
Volume (vph)	10	585	10	15	930	35	35	1	90	20	1	1
Ideal Flow (vphpl)	1900	1900	1900	1900	1900	1900	1900	1900	1900	1900	1900	1900
Lane Width (ft)	12	12	12	12	12	12	12	12	12	12	12	12
Grade (%)		0%			0%			0%			0%	
Storage Length (ft)	200		0	100		0	0		100	0		0
Storage Lanes	1		0	1		0	0		1	0		0
Taper Length (ft)	100			100			100			100		
Right Turn on Red			No			No			No			No
Link Speed (mph)		40			40			25			25	
Link Distance (ft)		1050			1554			303			468	
Travel Time (s)		17.9			26.5			8.3			12.8	
Confl. Peds. (#/hr)												
Confl. Bikes (#/hr)												
Peak Hour Factor	0.91	0.91	0.91	0.91	0.91	0.91	0.91	0.91	0.91	0.91	0.91	0.91
Growth Factor	100%	100%	100%	100%	100%	100%	100%	100%	50%	100%	100%	100%
Heavy Vehicles (%)	3%	3%	3%	1%	1%	1%	1%	1%	1%	5%	5%	5%
Bus Blockages (#/hr)	0	0	0	0	0	0	0	0	0	0	0	0
Parking (#/hr)												
Mid-Block Traffic (%)		0%			0%			0%			0%	
Shared Lane Traffic (%)												
Lane Group Flow (vph)	11	654	0	16	1060	0	0	39	49	0	24	0
Turn Type	Perm	NA		pm+pt	NA		Perm	NA	Perm	Perm	NA	
Protected Phases		6		5	2			8			4	
Permitted Phases	6			2			8		8	4		
Detector Phase	6	6		5	2		8	8	8	4	4	
Switch Phase												
Minimum Initial (s)	15.0	15.0		6.0	7.0		6.0	6.0	6.0	6.0	6.0	
Minimum Split (s)	25.7	25.7		11.7	25.7		24.0	24.0	24.0	24.0	24.0	
Total Split (s)	39.0	39.0		12.0	51.0		24.0	24.0	24.0	24.0	24.0	
Total Split (%)	52.0%	52.0%		16.0%	68.0%		32.0%	32.0%	32.0%	32.0%	32.0%	
Maximum Green (s)	33.3	33.3		6.3	45.3		20.0	20.0	20.0	20.0	20.0	
Yellow Time (s)	4.5	4.5		4.5	4.5		3.0	3.0	3.0	3.0	3.0	
All-Red Time (s)	1.2	1.2		1.2	1.2		1.0	1.0	1.0	1.0	1.0	
Lost Time Adjust (s)	0.0	0.0		0.0	0.0			0.0	0.0		0.0	
Total Lost Time (s)	5.7	5.7		5.7	5.7			4.0	4.0		4.0	
Lead/Lag	Lag	Lag		Lead								
Lead-Lag Optimize?												
Vehicle Extension (s)	5.5	5.5		4.5	5.5		3.0	3.0	3.0	3.0	3.0	
Minimum Gap (s)	2.0	2.0		0.2	2.0		1.5	1.5	1.5	1.5	1.5	
Time Before Reduce (s)	0.0	0.0		0.0	0.0		0.0	0.0	0.0	0.0	0.0	
Time To Reduce (s)	0.0	0.0		0.0	0.0		0.0	0.0	0.0	0.0	0.0	
Recall Mode	C-Max	C-Max		None	C-Max		None	None	None	None	None	
Walk Time (s)	6.0	6.0			6.0		6.0	6.0	6.0	6.0	6.0	
Flash Dont Walk (s)	14.0	14.0			14.0		14.0	14.0	14.0	14.0	14.0	
Pedestrian Calls (#/hr)	0	0			0		0	0	0	0	0	
v/c Ratio	0.03	0.46		0.03	0.70			0.28	0.29		0.18	
Control Delay	5.4	6.6		0.9	6.0			35.2	34.8		32.8	
Queue Delay	0.0	0.0		0.0	0.0			0.0	0.0		0.0	

Lane Group	EBL	EBT	EBR	WBL	WBT	WBR	NBL	NBT	NBR	SBL	SBT	SBR
Total Delay	5.4	6.6		0.9	6.0			35.2	34.8		32.8	
Queue Length 50th (ft)	1	81		0	106			17	22		10	
Queue Length 95th (ft)	9	289		m1	120			43	51		31	
Internal Link Dist (ft)		970			1474			223			388	
Turn Bay Length (ft)	200			100					100			
Base Capacity (vph)	321	1425		575	1511			358	426		342	
Starvation Cap Reductn	0	0		0	0			0	0		0	
Spillback Cap Reductn	0	0		0	0			0	0		0	
Storage Cap Reductn	0	0		0	0			0	0		0	
Reduced v/c Ratio	0.03	0.46		0.03	0.70			0.11	0.12		0.07	

Intersection Summary

Area Type: Other
Cycle Length: 75
Actuated Cycle Length: 75
Offset: 11 (15%), Referenced to phase 2:WBTL and 6:EBTL, Start of Green
Natural Cycle: 80
Control Type: Actuated-Coordinated
Description: TOD plans in peak school hours, coord w/ STH83/CTH NN Ped PB. No Xwalks.
m Volume for 95th percentile queue is metered by upstream signal.

Splits and Phases: 300: HS Dwy/Fairwinds Boulevard & CTH N

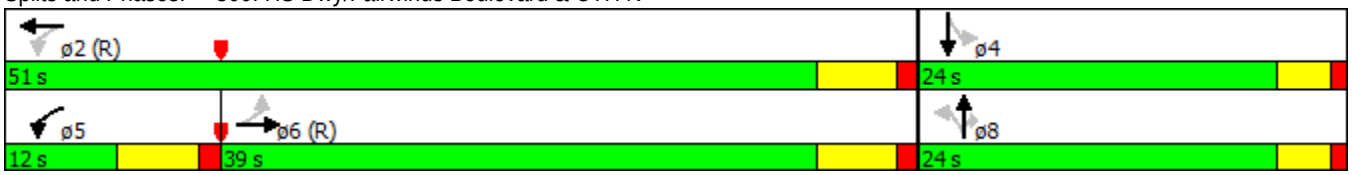

Movement	EBL	EBT	EBR	WBL	WBT	WBR	NBL	NBT	NBR	SBL	SBT	SBR
Lane Configurations												
Volume (veh/h)	10	585	10	15	930	35	35	1	90	20	1	1
Number	1	6	16	5	2	12	3	8	18	7	4	14
Initial Q (Qb), veh	0	0	0	0	0	0	0	0	0	0	0	0
Ped-Bike Adj(A_pbT)	1.00		1.00	1.00		1.00	1.00		1.00	1.00		1.00
Parking Bus, Adj	1.00	1.00	1.00	1.00	1.00	1.00	1.00	1.00	1.00	1.00	1.00	1.00
Adj Sat Flow, veh/h/ln	1845	1845	1900	1881	1881	1900	1900	1881	1881	1900	1810	1900
Adj Flow Rate, veh/h	11	643	11	16	1022	38	38	1	49	22	1	1
Adj No. of Lanes	1	1	0	1	1	0	0	1	1	0	1	0
Peak Hour Factor	0.91	0.91	0.91	0.91	0.91	0.91	0.91	0.91	0.91	0.91	0.91	0.91
Percent Heavy Veh, %	3	3	3	1	1	1	1	1	1	5	5	5
Cap, veh/h	377	1265	22	555	1439	54	207	4	116	155	7	3
Arrive On Green	0.70	0.70	0.70	0.02	0.80	0.80	0.07	0.07	0.07	0.07	0.07	0.07
Sat Flow, veh/h	525	1808	31	1792	1802	67	1547	59	1599	875	97	42
Grp Volume(v), veh/h	11	0	654	16	0	1060	39	0	49	24	0	0
Grp Sat Flow(s),veh/h/ln	525	0	1839	1792	0	1869	1606	0	1599	1014	0	0
Q Serve(g_s), s	0.7	0.0	12.4	0.2	0.0	19.8	0.0	0.0	2.2	1.1	0.0	0.0
Cycle Q Clear(g_c), s	13.1	0.0	12.4	0.2	0.0	19.8	1.5	0.0	2.2	2.6	0.0	0.0
Prop In Lane	1.00		0.02	1.00		0.04	0.97		1.00	0.92		0.04
Lane Grp Cap(c), veh/h	377	0	1287	555	0	1493	211	0	116	165	0	0
V/C Ratio(X)	0.03	0.00	0.51	0.03	0.00	0.71	0.18	0.00	0.42	0.15	0.00	0.00
Avail Cap(c_a), veh/h	377	0	1287	665	0	1493	489	0	426	425	0	0
HCM Platoon Ratio	1.00	1.00	1.00	1.00	1.00	1.00	1.00	1.00	1.00	1.00	1.00	1.00
Upstream Filter(I)	1.00	0.00	1.00	1.00	0.00	1.00	1.00	0.00	1.00	1.00	0.00	0.00
Uniform Delay (d), s/veh	8.3	0.0	5.2	3.8	0.0	3.5	33.0	0.0	33.3	33.9	0.0	0.0
Incr Delay (d2), s/veh	0.1	0.0	1.4	0.0	0.0	2.9	0.4	0.0	2.5	0.4	0.0	0.0
Initial Q Delay(d3),s/veh	0.0	0.0	0.0	0.0	0.0	0.0	0.0	0.0	0.0	0.0	0.0	0.0
%ile BackOfQ(95%),veh/ln	0.2	0.0	10.9	0.2	0.0	16.3	1.4	0.0	1.9	0.9	0.0	0.0
LnGrp Delay(d),s/veh	8.4	0.0	6.7	3.8	0.0	6.4	33.4	0.0	35.8	34.3	0.0	0.0
LnGrp LOS	A		A	A		A	C		D	C		
Approach Vol, veh/h		665			1076			88			24	
Approach Delay, s/veh		6.7			6.4			34.7			34.3	
Approach LOS		A			A			C			C	

Timer	1	2	3	4	5	6	7	8
Assigned Phs		2		4	5	6		8
Phs Duration (G+Y+Rc), s		65.6		9.4	7.4	58.2		9.4
Change Period (Y+Rc), s		* 5.7		4.0	* 5.7	* 5.7		4.0
Max Green Setting (Gmax), s		* 45		20.0	* 6.3	* 33		20.0
Max Q Clear Time (g_c+I1), s		21.8		4.6	2.2	15.1		4.2
Green Ext Time (p_c), s		21.0		0.4	0.0	16.6		0.4

Intersection Summary	
HCM 2010 Ctrl Delay	8.2
HCM 2010 LOS	A

Notes

* HCM 2010 computational engine requires equal clearance times for the phases crossing the barrier.

APPENDIX G

TRANSPORTATION SYSTEM IMPROVEMENTS WITH TOTAL TRAFFIC OPERATIONAL ANALYSIS

G1. Base Year 2016 Total Traffic

Lane Group	EBL	EBT	EBR	WBL	WBT	WBR	NBL	NBT	NBR	SBL	SBT	SBR
Lane Configurations												
Volume (vph)	25	1	40	165	1	95	15	600	175	95	500	10
Ideal Flow (vphpl)	1900	1900	1900	1900	1900	1900	1900	1900	1900	1900	1900	1900
Lane Width (ft)	12	12	12	12	12	12	12	12	12	12	12	12
Grade (%)		0%			0%			0%			0%	
Storage Length (ft)	100		0	0		0	340		225	390		0
Storage Lanes	1		0	1		0	1		1	1		0
Taper Length (ft)	100			100			100			100		
Right Turn on Red			No			No			No			No
Link Speed (mph)		30			25			35			35	
Link Distance (ft)		527			580			2325			691	
Travel Time (s)		12.0			15.8			45.3			13.5	
Confl. Peds. (#/hr)												
Confl. Bikes (#/hr)												
Peak Hour Factor	0.88	0.88	0.88	0.88	0.88	0.88	0.88	0.88	0.88	0.88	0.88	0.88
Growth Factor	100%	100%	100%	100%	100%	100%	100%	100%	50%	100%	100%	100%
Heavy Vehicles (%)	2%	2%	2%	25%	25%	25%	5%	5%	5%	7%	7%	7%
Bus Blockages (#/hr)	0	0	0	0	0	0	0	0	0	0	0	0
Parking (#/hr)												
Mid-Block Traffic (%)		0%			0%			0%			0%	
Shared Lane Traffic (%)												
Lane Group Flow (vph)	28	46	0	188	109	0	17	682	99	108	579	0
Turn Type	Perm	NA		Perm	NA		Perm	NA	Perm	Perm	NA	
Protected Phases		4			8			2			6	
Permitted Phases	4			8			2		2	6		
Detector Phase	4	4		8	8		2	2	2	6	6	
Switch Phase												
Minimum Initial (s)	10.0	10.0		10.0	10.0		15.0	15.0	15.0	15.0	15.0	
Minimum Split (s)	16.0	16.0		16.0	16.0		21.0	21.0	21.0	21.0	21.0	
Total Split (s)	40.0	40.0		40.0	40.0		50.0	50.0	50.0	50.0	50.0	
Total Split (%)	44.4%	44.4%		44.4%	44.4%		55.6%	55.6%	55.6%	55.6%	55.6%	
Maximum Green (s)	34.0	34.0		34.0	34.0		44.0	44.0	44.0	44.0	44.0	
Yellow Time (s)	4.0	4.0		4.0	4.0		4.0	4.0	4.0	4.0	4.0	
All-Red Time (s)	2.0	2.0		2.0	2.0		2.0	2.0	2.0	2.0	2.0	
Lost Time Adjust (s)	0.0	0.0		0.0	0.0		0.0	0.0	0.0	0.0	0.0	
Total Lost Time (s)	6.0	6.0		6.0	6.0		6.0	6.0	6.0	6.0	6.0	
Lead/Lag												
Lead-Lag Optimize?												
Vehicle Extension (s)	3.0	3.0		3.0	3.0		3.0	3.0	3.0	3.0	3.0	
Minimum Gap (s)	3.0	3.0		3.0	3.0		3.0	3.0	3.0	3.0	3.0	
Time Before Reduce (s)	0.0	0.0		0.0	0.0		0.0	0.0	0.0	0.0	0.0	
Time To Reduce (s)	0.0	0.0		0.0	0.0		0.0	0.0	0.0	0.0	0.0	
Recall Mode	None	None		None	None		C-Max	C-Max	C-Max	C-Max	C-Max	
Walk Time (s)	7.0	7.0		7.0	7.0		7.0	7.0	7.0	7.0	7.0	
Flash Dont Walk (s)	24.0	24.0		24.0	24.0		24.0	24.0	24.0	24.0	24.0	
Pedestrian Calls (#/hr)	0	0		0	0		0	0	0	0	0	
v/c Ratio	0.09	0.12		0.73	0.36		0.03	0.31	0.10	0.25	0.27	
Control Delay	24.4	24.9		47.7	30.3		4.7	4.8	4.1	11.2	8.7	
Queue Delay	0.0	0.0		0.0	0.0		0.0	0.0	0.0	0.0	0.0	

Lane Group	EBL	EBT	EBR	WBL	WBT	WBR	NBL	NBT	NBR	SBL	SBT	SBR
Total Delay	24.4	24.9		47.7	30.3		4.7	4.8	4.1	11.2	8.7	
Queue Length 50th (ft)	13	21		99	52		1	16	5	24	68	
Queue Length 95th (ft)	29	41		147	84		m4	149	m29	67	123	
Internal Link Dist (ft)		447			500			2245			611	
Turn Bay Length (ft)	100						340		225	390		
Base Capacity (vph)	483	600		417	488		492	2182	976	424	2135	
Starvation Cap Reductn	0	0		0	0		0	0	0	0	0	
Spillback Cap Reductn	0	0		0	0		0	0	0	0	0	
Storage Cap Reductn	0	0		0	0		0	0	0	0	0	
Reduced v/c Ratio	0.06	0.08		0.45	0.22		0.03	0.31	0.10	0.25	0.27	

Intersection Summary

Area Type: Other
Cycle Length: 90
Actuated Cycle Length: 90
Offset: 55 (61%), Referenced to phase 2:NBTL and 6:SBTL, Start of Green
Natural Cycle: 40
Control Type: Actuated-Coordinated
Description: Proposed Signal. Assume ped PB, coordination, signal will go out of coord w/ped calls.Ped FDW reduced for HCM 2010 output.
m Volume for 95th percentile queue is metered by upstream signal.

Splits and Phases: 100: STH 83/Rochester Street & Black Bear Boulvard

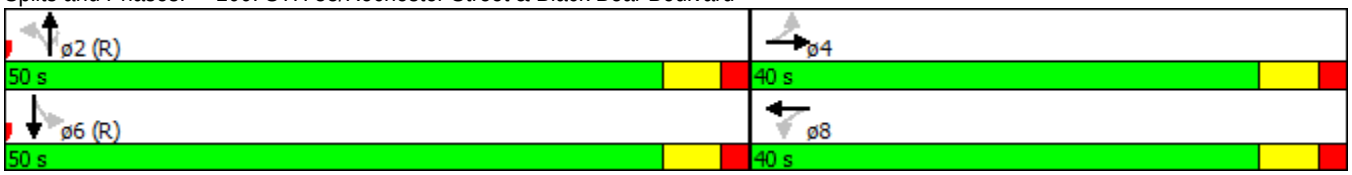

Movement	EBL	EBT	EBR	WBL	WBT	WBR	NBL	NBT	NBR	SBL	SBT	SBR
Lane Configurations												
Volume (veh/h)	25	1	40	165	1	95	15	600	175	95	500	10
Number	7	4	14	3	8	18	5	2	12	1	6	16
Initial Q (Qb), veh	0	0	0	0	0	0	0	0	0	0	0	0
Ped-Bike Adj(A_pbT)	1.00		1.00	1.00		1.00	1.00		1.00	1.00		1.00
Parking Bus, Adj	1.00	1.00	1.00	1.00	1.00	1.00	1.00	1.00	1.00	1.00	1.00	1.00
Adj Sat Flow, veh/h/ln	1863	1863	1900	1520	1520	1900	1810	1810	1810	1776	1776	1900
Adj Flow Rate, veh/h	28	1	45	188	1	108	17	682	99	108	568	11
Adj No. of Lanes	1	1	0	1	1	0	1	2	1	1	2	0
Peak Hour Factor	0.88	0.88	0.88	0.88	0.88	0.88	0.88	0.88	0.88	0.88	0.88	0.88
Percent Heavy Veh, %	2	2	2	25	25	25	5	5	5	7	7	7
Cap, veh/h	280	8	353	306	3	291	538	2199	984	390	2165	42
Arrive On Green	0.23	0.23	0.23	0.23	0.23	0.23	0.21	0.21	0.21	0.64	0.64	0.64
Sat Flow, veh/h	1279	35	1554	1105	12	1282	808	3438	1538	657	3386	66
Grp Volume(v), veh/h	28	0	46	188	0	109	17	682	99	108	283	296
Grp Sat Flow(s),veh/h/ln	1279	0	1589	1105	0	1294	808	1719	1538	657	1687	1764
Q Serve(g_s), s	1.7	0.0	2.1	14.7	0.0	6.4	1.6	15.1	4.7	9.4	6.5	6.5
Cycle Q Clear(g_c), s	8.1	0.0	2.1	16.8	0.0	6.4	8.1	15.1	4.7	24.4	6.5	6.5
Prop In Lane	1.00		0.98	1.00		0.99	1.00		1.00	1.00		0.04
Lane Grp Cap(c), veh/h	280	0	361	306	0	294	538	2199	984	390	1079	1128
V/C Ratio(X)	0.10	0.00	0.13	0.62	0.00	0.37	0.03	0.31	0.10	0.28	0.26	0.26
Avail Cap(c_a), veh/h	472	0	600	472	0	489	538	2199	984	390	1079	1128
HCM Platoon Ratio	1.00	1.00	1.00	1.00	1.00	1.00	0.33	0.33	0.33	1.00	1.00	1.00
Upstream Filter(I)	1.00	0.00	1.00	1.00	0.00	1.00	0.74	0.74	0.74	1.00	1.00	1.00
Uniform Delay (d), s/veh	32.8	0.0	27.7	34.3	0.0	29.3	18.7	18.7	14.6	15.0	7.0	7.0
Incr Delay (d2), s/veh	0.2	0.0	0.2	2.0	0.0	0.8	0.1	0.3	0.2	1.8	0.6	0.6
Initial Q Delay(d3),s/veh	0.0	0.0	0.0	0.0	0.0	0.0	0.0	0.0	0.0	0.0	0.0	0.0
%ile BackOfQ(50%),veh/ln	0.6	0.0	0.9	4.7	0.0	2.3	0.4	7.3	2.0	1.9	3.2	3.3
LnGrp Delay(d),s/veh	32.9	0.0	27.8	36.4	0.0	30.1	18.8	19.0	14.8	16.8	7.6	7.6
LnGrp LOS	C		C	D		C	B	B	B	B	A	A
Approach Vol, veh/h		74			297			798			687	
Approach Delay, s/veh		29.8			34.1			18.5			9.0	
Approach LOS		C			C			B			A	

Timer	1	2	3	4	5	6	7	8
Assigned Phs		2		4		6		8
Phs Duration (G+Y+Rc), s		63.6		26.4		63.6		26.4
Change Period (Y+Rc), s		6.0		6.0		6.0		6.0
Max Green Setting (Gmax), s		44.0		34.0		44.0		34.0
Max Q Clear Time (g_c+I1), s		17.1		10.1		26.4		18.8
Green Ext Time (p_c), s		11.1		2.0		9.0		1.7

Intersection Summary	
HCM 2010 Ctrl Delay	17.9
HCM 2010 LOS	B

Notes

User approved pedestrian interval to be less than phase max green.

Lane Group	EBL	EBT	EBR	WBL	WBT	WBR	NBL	NBT	NBR	SBL	SBT	SBR
Lane Configurations												
Volume (vph)	185	385	365	35	355	170	285	435	75	205	440	60
Ideal Flow (vphpl)	1900	1900	1900	1900	1900	1900	1900	1900	1900	1900	1900	1900
Lane Width (ft)	12	12	12	12	12	12	12	12	12	12	12	12
Grade (%)		0%			0%			0%			0%	
Storage Length (ft)	210		430	215		0	260		55	240		90
Storage Lanes	1		1	1		0	2		1	1		1
Taper Length (ft)	100			100			100			100		
Right Turn on Red			No			No			No			No
Link Speed (mph)		40			40			35			35	
Link Distance (ft)		705			1339			1052			2325	
Travel Time (s)		12.0			22.8			20.5			45.3	
Confl. Peds. (#/hr)												
Confl. Bikes (#/hr)												
Peak Hour Factor	0.81	0.81	0.81	0.81	0.81	0.81	0.81	0.81	0.81	0.81	0.81	0.81
Growth Factor	100%	100%	50%	100%	100%	100%	100%	100%	50%	100%	100%	50%
Heavy Vehicles (%)	5%	5%	5%	5%	5%	5%	10%	10%	10%	7%	7%	7%
Bus Blockages (#/hr)	0	0	0	0	0	0	0	0	0	0	0	0
Parking (#/hr)												
Mid-Block Traffic (%)		0%			0%			0%			0%	
Shared Lane Traffic (%)												
Lane Group Flow (vph)	228	475	225	43	648	0	352	537	46	253	543	37
Turn Type	pm+pt	NA	Perm	pm+pt	NA		Prot	NA	Perm	D.P+P	NA	Perm
Protected Phases	7	4		3	8		1	6		5	2	
Permitted Phases	4		4	8					6	6		2
Detector Phase	7	4	4	3	8		1	6	6	5	2	2
Switch Phase												
Minimum Initial (s)	6.0	8.0	8.0	6.0	8.0		8.0	15.0	15.0	6.0	15.0	15.0
Minimum Split (s)	10.5	14.6	14.6	10.5	14.6		12.5	21.4	21.4	10.5	21.4	21.4
Total Split (s)	14.0	36.0	36.0	10.5	32.5		18.0	27.9	27.9	15.6	25.5	25.5
Total Split (%)	15.6%	40.0%	40.0%	11.7%	36.1%		20.0%	31.0%	31.0%	17.3%	28.3%	28.3%
Maximum Green (s)	9.5	29.4	29.4	6.0	25.9		13.5	21.5	21.5	11.1	19.1	19.1
Yellow Time (s)	3.5	4.0	4.0	3.5	4.0		3.5	3.9	3.9	3.5	3.9	3.9
All-Red Time (s)	1.0	2.6	2.6	1.0	2.6		1.0	2.5	2.5	1.0	2.5	2.5
Lost Time Adjust (s)	0.0	0.0	0.0	0.0	0.0		0.0	0.0	0.0	0.0	0.0	0.0
Total Lost Time (s)	4.5	6.6	6.6	4.5	6.6		4.5	6.4	6.4	4.5	6.4	6.4
Lead/Lag	Lead	Lag	Lag	Lead	Lag		Lead	Lag	Lag	Lead	Lag	Lag
Lead-Lag Optimize?												
Vehicle Extension (s)	1.5	1.5	1.5	1.5	1.5		1.5	4.3	4.3	1.5	3.4	3.4
Minimum Gap (s)	1.5	1.5	1.5	1.5	1.5		1.5	2.0	2.0	1.5	2.0	2.0
Time Before Reduce (s)	20.0	30.0	30.0	20.0	30.0		20.0	19.0	19.0	20.0	20.0	20.0
Time To Reduce (s)	0.0	0.0	0.0	0.0	0.0		0.0	21.0	21.0	0.0	20.0	20.0
Recall Mode	None	None	None	None	None		None	C-Max	C-Max	None	C-Max	C-Max
Walk Time (s)		7.0	7.0		7.0			7.0	7.0		7.0	7.0
Flash Dont Walk (s)		35.0	35.0		37.0			32.0	32.0		37.0	37.0
Pedestrian Calls (#/hr)		0	0		0			0	0		0	0
v/c Ratio	0.75	0.79	0.44	0.16	0.80		0.80	0.57	0.11	0.67	0.61	0.09
Control Delay	28.2	31.0	22.6	15.5	39.2		51.8	31.4	27.2	25.5	27.4	22.7
Queue Delay	0.0	0.0	0.0	0.0	0.0		0.0	0.0	0.0	0.0	0.0	0.0

Lane Group	EBL	EBT	EBR	WBL	WBT	WBR	NBL	NBT	NBR	SBL	SBT	SBR
Total Delay	28.2	31.0	22.6	15.5	39.2		51.8	31.4	27.2	25.5	27.4	22.7
Queue Length 50th (ft)	50	204	73	13	175		100	143	20	75	160	13
Queue Length 95th (ft)	m82	284	m104	28	203		129	177	44	136	128	30
Internal Link Dist (ft)		625			1259			972			2245	
Turn Bay Length (ft)	210		430	215			260		55	240		90
Base Capacity (vph)	305	608	516	265	941		477	946	423	395	890	398
Starvation Cap Reductn	0	0	0	0	0		0	0	0	0	0	0
Spillback Cap Reductn	0	0	0	0	0		0	0	0	0	0	0
Storage Cap Reductn	0	0	0	0	0		0	0	0	0	0	0
Reduced v/c Ratio	0.75	0.78	0.44	0.16	0.69		0.74	0.57	0.11	0.64	0.61	0.09

Intersection Summary

Area Type: Other
Cycle Length: 90
Actuated Cycle Length: 90
Offset: 89 (99%), Referenced to phase 2:SBT and 6:NBSB, Start of Green
Natural Cycle: 80
Control Type: Actuated-Coordinated
Description: PB all app. Min splits reduced for coordination CL. Signal will go out of coord w/ped calls. SB LT FYA.
m Volume for 95th percentile queue is metered by upstream signal.

Splits and Phases: 200: STH 83/Rochester Street & CTH N

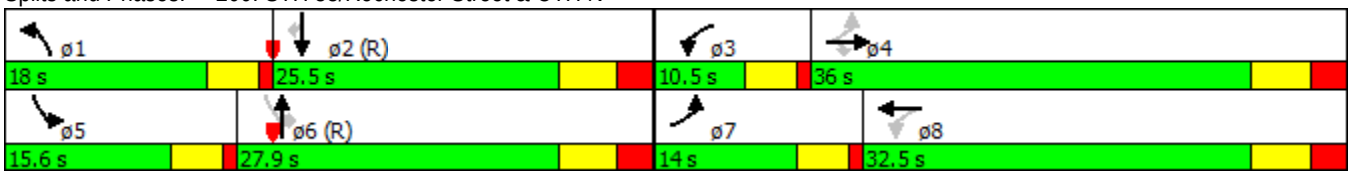

Movement	EBL	EBT	EBR	WBL	WBT	WBR	NBL	NBT	NBR	SBL	SBT	SBR
Lane Configurations												
Volume (veh/h)	185	385	365	35	355	170	285	435	75	205	440	60
Number	7	4	14	3	8	18	1	6	16	5	2	12
Initial Q (Qb), veh	0	0	0	0	0	0	0	0	0	0	0	0
Ped-Bike Adj(A_pbT)	1.00		1.00	1.00		1.00	1.00		1.00	1.00		1.00
Parking Bus, Adj	1.00	1.00	1.00	1.00	1.00	1.00	1.00	1.00	1.00	1.00	1.00	1.00
Adj Sat Flow, veh/h/ln	1810	1810	1810	1810	1810	1900	1727	1727	1727	1776	1776	1776
Adj Flow Rate, veh/h	228	475	225	43	438	210	352	537	46	253	543	37
Adj No. of Lanes	1	1	1	1	2	0	2	2	1	1	2	1
Peak Hour Factor	0.81	0.81	0.81	0.81	0.81	0.81	0.81	0.81	0.81	0.81	0.81	0.81
Percent Heavy Veh, %	5	5	5	5	5	5	10	10	10	7	7	7
Cap, veh/h	299	536	455	188	530	252	419	959	429	410	960	429
Arrive On Green	0.11	0.30	0.30	0.04	0.23	0.23	0.13	0.29	0.29	0.12	0.28	0.28
Sat Flow, veh/h	1723	1810	1538	1723	2263	1075	3191	3282	1468	1691	3374	1509
Grp Volume(v), veh/h	228	475	225	43	332	316	352	537	46	253	543	37
Grp Sat Flow(s),veh/h/ln	1723	1810	1538	1723	1719	1620	1596	1641	1468	1691	1687	1509
Q Serve(g_s), s	8.8	22.6	10.9	1.7	16.5	16.7	9.7	12.5	2.1	9.3	12.4	1.6
Cycle Q Clear(g_c), s	8.8	22.6	10.9	1.7	16.5	16.7	9.7	12.5	2.1	9.3	12.4	1.6
Prop In Lane	1.00		1.00	1.00		0.66	1.00		1.00	1.00		1.00
Lane Grp Cap(c), veh/h	299	536	455	188	403	380	419	959	429	410	960	429
V/C Ratio(X)	0.76	0.89	0.49	0.23	0.82	0.83	0.84	0.56	0.11	0.62	0.57	0.09
Avail Cap(c_a), veh/h	299	591	502	228	495	466	479	959	429	410	960	429
HCM Platoon Ratio	1.00	1.00	1.00	1.00	1.00	1.00	1.00	1.00	1.00	1.00	1.00	1.00
Upstream Filter(I)	1.00	1.00	1.00	1.00	1.00	1.00	1.00	1.00	1.00	0.93	0.93	0.93
Uniform Delay (d), s/veh	23.7	30.2	26.1	25.7	32.7	32.8	38.2	26.9	23.3	19.3	27.5	23.6
Incr Delay (d2), s/veh	10.0	13.3	0.3	0.2	7.5	8.7	10.2	2.4	0.5	1.9	2.2	0.4
Initial Q Delay(d3),s/veh	0.0	0.0	0.0	0.0	0.0	0.0	0.0	0.0	0.0	0.0	0.0	0.0
%ile BackOfQ(50%),veh/ln	4.9	13.2	4.6	0.8	8.7	8.4	4.8	5.9	0.9	4.4	6.0	0.7
LnGrp Delay(d),s/veh	33.7	43.6	26.4	26.0	40.2	41.4	48.4	29.3	23.8	21.3	29.7	24.0
LnGrp LOS	C	D	C	C	D	D	D	C	C	C	C	C
Approach Vol, veh/h		928			691			935			833	
Approach Delay, s/veh		37.0			39.9			36.2			26.9	
Approach LOS		D			D			D			C	

Timer	1	2	3	4	5	6	7	8
Assigned Phs	1	2	3	4	5	6	7	8
Phs Duration (G+Y+Rc), s	16.3	32.0	8.5	33.2	15.6	32.7	14.0	27.7
Change Period (Y+Rc), s	4.5	6.4	4.5	6.6	4.5	6.4	4.5	6.6
Max Green Setting (Gmax), s	13.5	19.1	6.0	29.4	11.1	21.5	9.5	25.9
Max Q Clear Time (g_c+I1), s	11.7	14.4	3.7	24.6	11.3	14.5	10.8	18.7
Green Ext Time (p_c), s	0.1	3.3	0.0	1.9	0.0	4.6	0.0	2.4

Intersection Summary	
HCM 2010 Ctrl Delay	34.9
HCM 2010 LOS	C

Notes

User approved pedestrian interval to be less than phase max green.

Lane Group	EBL	EBT	EBR	WBL	WBT	WBR	NBL	NBT	NBR	SBL	SBT	SBR
Lane Configurations												
Volume (vph)	5	610	30	90	590	20	60	1	270	55	1	5
Ideal Flow (vphpl)	1900	1900	1900	1900	1900	1900	1900	1900	1900	1900	1900	1900
Lane Width (ft)	12	12	12	12	12	12	12	12	12	12	12	12
Grade (%)		0%			0%			0%			0%	
Storage Length (ft)	200		0	100		0	0		100	0		0
Storage Lanes	1		0	1		0	0		1	0		0
Taper Length (ft)	100			100			100			100		
Right Turn on Red			No			No			No			No
Link Speed (mph)		40			40			25			25	
Link Distance (ft)		1050			1554			303			468	
Travel Time (s)		17.9			26.5			8.3			12.8	
Confl. Peds. (#/hr)												
Confl. Bikes (#/hr)												
Peak Hour Factor	0.72	0.72	0.72	0.72	0.72	0.72	0.72	0.72	0.72	0.72	0.72	0.72
Growth Factor	100%	100%	100%	100%	100%	100%	100%	100%	50%	100%	100%	100%
Heavy Vehicles (%)	2%	2%	2%	5%	5%	5%	12%	12%	12%	2%	2%	2%
Bus Blockages (#/hr)	0	0	0	0	0	0	0	0	0	0	0	0
Parking (#/hr)												
Mid-Block Traffic (%)		0%			0%			0%			0%	
Shared Lane Traffic (%)												
Lane Group Flow (vph)	7	889	0	125	847	0	0	84	188	0	84	0
Turn Type	Perm	NA		pm+pt	NA		Perm	NA	Perm	Perm	NA	
Protected Phases		6		5	2			8			4	
Permitted Phases	6			2			8		8	4		
Detector Phase	6	6		5	2		8	8	8	4	4	
Switch Phase												
Minimum Initial (s)	15.0	15.0		6.0	7.0		6.0	6.0	6.0	6.0	6.0	
Minimum Split (s)	25.7	25.7		11.7	25.7		24.0	24.0	24.0	24.0	24.0	
Total Split (s)	54.0	54.0		12.0	66.0		24.0	24.0	24.0	24.0	24.0	
Total Split (%)	60.0%	60.0%		13.3%	73.3%		26.7%	26.7%	26.7%	26.7%	26.7%	
Maximum Green (s)	48.3	48.3		6.3	60.3		20.0	20.0	20.0	20.0	20.0	
Yellow Time (s)	4.5	4.5		4.5	4.5		3.0	3.0	3.0	3.0	3.0	
All-Red Time (s)	1.2	1.2		1.2	1.2		1.0	1.0	1.0	1.0	1.0	
Lost Time Adjust (s)	0.0	0.0		0.0	0.0			0.0	0.0		0.0	
Total Lost Time (s)	5.7	5.7		5.7	5.7			4.0	4.0		4.0	
Lead/Lag	Lag	Lag		Lead								
Lead-Lag Optimize?												
Vehicle Extension (s)	5.5	5.5		4.5	5.5		3.0	3.0	3.0	3.0	3.0	
Minimum Gap (s)	2.0	2.0		0.2	2.0		1.5	1.5	1.5	1.5	1.5	
Time Before Reduce (s)	0.0	0.0		0.0	0.0		0.0	0.0	0.0	0.0	0.0	
Time To Reduce (s)	0.0	0.0		0.0	0.0		0.0	0.0	0.0	0.0	0.0	
Recall Mode	C-Max	C-Max		None	C-Max		None	None	None	None	None	
Walk Time (s)	6.0	6.0			6.0		6.0	6.0	6.0	6.0	6.0	
Flash Dont Walk (s)	14.0	14.0			14.0		14.0	14.0	14.0	14.0	14.0	
Pedestrian Calls (#/hr)	0	0			0		0	0	0	0	0	
v/c Ratio	0.02	0.83		0.48	0.66			0.39	0.73		0.37	
Control Delay	9.8	25.1		16.6	5.2			36.6	50.9		35.9	
Queue Delay	0.0	0.0		0.0	0.0			0.0	0.0		0.0	

Lane Group	EBL	EBT	EBR	WBL	WBT	WBR	NBL	NBT	NBR	SBL	SBT	SBR
Total Delay	9.8	25.1		16.6	5.2			36.6	50.9		35.9	
Queue Length 50th (ft)	2	388		6	71			42	101		42	
Queue Length 95th (ft)	7	401		m25	32			64	127		64	
Internal Link Dist (ft)		970			1474			223			388	
Turn Bay Length (ft)	200			100					100			
Base Capacity (vph)	337	1072		261	1283			271	320		284	
Starvation Cap Reductn	0	0		0	0			0	0		0	
Spillback Cap Reductn	0	0		0	0			0	0		0	
Storage Cap Reductn	0	0		0	0			0	0		0	
Reduced v/c Ratio	0.02	0.83		0.48	0.66			0.31	0.59		0.30	

Intersection Summary

Area Type: Other
Cycle Length: 90
Actuated Cycle Length: 90
Offset: 82 (91%), Referenced to phase 2:WBTL and 6:EBTL, Start of Green
Natural Cycle: 90
Control Type: Actuated-Coordinated
Description: TOD plans in peak school hours, coord w/ STH83/CTH NN Ped PB. No Xwalks.
m Volume for 95th percentile queue is metered by upstream signal.

Splits and Phases: 300: HS Dwy/Fairwinds Boulevard & CTH N

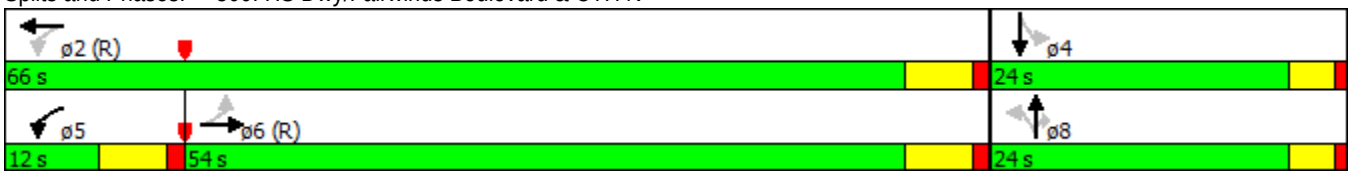

Movement	EBL	EBT	EBR	WBL	WBT	WBR	NBL	NBT	NBR	SBL	SBT	SBR
Lane Configurations												
Volume (veh/h)	5	610	30	90	590	20	60	1	270	55	1	5
Number	1	6	16	5	2	12	3	8	18	7	4	14
Initial Q (Qb), veh	0	0	0	0	0	0	0	0	0	0	0	0
Ped-Bike Adj(A_pbT)	1.00		1.00	1.00		1.00	1.00		1.00	1.00		1.00
Parking Bus, Adj	1.00	1.00	1.00	1.00	1.00	1.00	1.00	1.00	1.00	1.00	1.00	1.00
Adj Sat Flow, veh/h/ln	1863	1863	1900	1810	1810	1900	1900	1696	1696	1900	1863	1900
Adj Flow Rate, veh/h	7	847	42	125	819	28	83	1	188	76	1	7
Adj No. of Lanes	1	1	0	1	1	0	0	1	1	0	1	0
Peak Hour Factor	0.72	0.72	0.72	0.72	0.72	0.72	0.72	0.72	0.72	0.72	0.72	0.72
Percent Heavy Veh, %	2	2	2	5	5	5	12	12	12	2	2	2
Cap, veh/h	402	1067	53	336	1276	44	308	3	229	198	6	12
Arrive On Green	0.61	0.61	0.61	0.06	0.73	0.73	0.16	0.16	0.16	0.16	0.16	0.16
Sat Flow, veh/h	648	1760	87	1723	1740	59	1440	20	1442	766	35	73
Grp Volume(v), veh/h	7	0	889	125	0	847	84	0	188	84	0	0
Grp Sat Flow(s),veh/h/ln	648	0	1847	1723	0	1799	1461	0	1442	874	0	0
Q Serve(g_s), s	0.5	0.0	32.9	2.2	0.0	21.3	0.0	0.0	11.4	5.6	0.0	0.0
Cycle Q Clear(g_c), s	10.4	0.0	32.9	2.2	0.0	21.3	4.4	0.0	11.4	9.9	0.0	0.0
Prop In Lane	1.00		0.05	1.00		0.03	0.99		1.00	0.90		0.08
Lane Grp Cap(c), veh/h	402	0	1120	336	0	1320	311	0	229	215	0	0
V/C Ratio(X)	0.02	0.00	0.79	0.37	0.00	0.64	0.27	0.00	0.82	0.39	0.00	0.00
Avail Cap(c_a), veh/h	402	0	1120	347	0	1320	393	0	320	292	0	0
HCM Platoon Ratio	1.00	1.00	1.00	1.00	1.00	1.00	1.00	1.00	1.00	1.00	1.00	1.00
Upstream Filter(I)	1.00	0.00	1.00	1.00	0.00	1.00	1.00	0.00	1.00	1.00	0.00	0.00
Uniform Delay (d), s/veh	11.5	0.0	13.4	13.1	0.0	6.0	33.7	0.0	36.6	37.8	0.0	0.0
Incr Delay (d2), s/veh	0.1	0.0	5.8	1.2	0.0	2.4	0.5	0.0	11.2	1.2	0.0	0.0
Initial Q Delay(d3),s/veh	0.0	0.0	0.0	0.0	0.0	0.0	0.0	0.0	0.0	0.0	0.0	0.0
%ile BackOfQ(50%),veh/ln	0.1	0.0	18.4	1.6	0.0	11.2	1.9	0.0	5.3	2.1	0.0	0.0
LnGrp Delay(d),s/veh	11.6	0.0	19.3	14.3	0.0	8.4	34.1	0.0	47.8	38.9	0.0	0.0
LnGrp LOS	B		B	B		A	C		D	D		
Approach Vol, veh/h		896			972			272			84	
Approach Delay, s/veh		19.2			9.2			43.6			38.9	
Approach LOS		B			A			D			D	

Timer	1	2	3	4	5	6	7	8
Assigned Phs		2		4	5	6		8
Phs Duration (G+Y+Rc), s		71.7		18.3	11.4	60.3		18.3
Change Period (Y+Rc), s		* 5.7		4.0	* 5.7	* 5.7		4.0
Max Green Setting (Gmax), s		* 60		20.0	* 6.3	* 48		20.0
Max Q Clear Time (g_c+I1), s		23.3		11.9	4.2	34.9		13.4
Green Ext Time (p_c), s		31.2		1.1	0.1	12.4		0.9

Intersection Summary	
HCM 2010 Ctrl Delay	18.6
HCM 2010 LOS	B

Notes

* HCM 2010 computational engine requires equal clearance times for the phases crossing the barrier.

Lane Group	EBL	EBT	EBR	WBL	WBT	WBR	NBL	NBT	NBR	SBL	SBT	SBR
Lane Configurations												
Volume (vph)	30	1	45	180	1	85	55	645	145	95	685	40
Ideal Flow (vphpl)	1900	1900	1900	1900	1900	1900	1900	1900	1900	1900	1900	1900
Lane Width (ft)	12	12	12	12	12	12	12	12	12	12	12	12
Grade (%)		0%			0%			0%			0%	
Storage Length (ft)	100		0	0		0	340		225	390		0
Storage Lanes	1		0	1		0	1		1	1		0
Taper Length (ft)	100			100			100			100		
Right Turn on Red			No			No			No			No
Link Speed (mph)		30			25			35			35	
Link Distance (ft)		527			580			2325			691	
Travel Time (s)		12.0			15.8			45.3			13.5	
Confl. Peds. (#/hr)												
Confl. Bikes (#/hr)												
Peak Hour Factor	0.92	0.92	0.92	0.92	0.92	0.92	0.92	0.92	0.92	0.92	0.92	0.92
Growth Factor	100%	100%	100%	100%	100%	100%	100%	100%	50%	100%	100%	100%
Heavy Vehicles (%)	2%	2%	2%	2%	2%	2%	3%	3%	3%	4%	4%	4%
Bus Blockages (#/hr)	0	0	0	0	0	0	0	0	0	0	0	0
Parking (#/hr)												
Mid-Block Traffic (%)		0%			0%			0%			0%	
Shared Lane Traffic (%)												
Lane Group Flow (vph)	33	50	0	196	93	0	60	701	79	103	788	0
Turn Type	Perm	NA		Perm	NA		Perm	NA	Perm	Perm	NA	
Protected Phases		4			8			2			6	
Permitted Phases	4			8			2		2	6		
Detector Phase	4	4		8	8		2	2	2	6	6	
Switch Phase												
Minimum Initial (s)	10.0	10.0		10.0	10.0		15.0	15.0	15.0	15.0	15.0	
Minimum Split (s)	16.0	16.0		16.0	16.0		21.0	21.0	21.0	21.0	21.0	
Total Split (s)	33.0	33.0		33.0	33.0		42.0	42.0	42.0	42.0	42.0	
Total Split (%)	44.0%	44.0%		44.0%	44.0%		56.0%	56.0%	56.0%	56.0%	56.0%	
Maximum Green (s)	27.0	27.0		27.0	27.0		36.0	36.0	36.0	36.0	36.0	
Yellow Time (s)	4.0	4.0		4.0	4.0		4.0	4.0	4.0	4.0	4.0	
All-Red Time (s)	2.0	2.0		2.0	2.0		2.0	2.0	2.0	2.0	2.0	
Lost Time Adjust (s)	0.0	0.0		0.0	0.0		0.0	0.0	0.0	0.0	0.0	
Total Lost Time (s)	6.0	6.0		6.0	6.0		6.0	6.0	6.0	6.0	6.0	
Lead/Lag												
Lead-Lag Optimize?												
Vehicle Extension (s)	3.0	3.0		3.0	3.0		3.0	3.0	3.0	3.0	3.0	
Minimum Gap (s)	3.0	3.0		3.0	3.0		3.0	3.0	3.0	3.0	3.0	
Time Before Reduce (s)	0.0	0.0		0.0	0.0		0.0	0.0	0.0	0.0	0.0	
Time To Reduce (s)	0.0	0.0		0.0	0.0		0.0	0.0	0.0	0.0	0.0	
Recall Mode	None	None		None	None		C-Max	C-Max	C-Max	C-Max	C-Max	
Walk Time (s)	7.0	7.0		7.0	7.0		7.0	7.0	7.0	7.0	7.0	
Flash Dont Walk (s)	24.0	24.0		24.0	24.0		24.0	24.0	24.0	24.0	24.0	
Pedestrian Calls (#/hr)	0	0		0	0		0	0	0	0	0	
v/c Ratio	0.12	0.14		0.66	0.27		0.16	0.32	0.08	0.24	0.37	
Control Delay	21.8	22.2		36.9	24.3		5.8	5.5	4.7	9.9	8.5	
Queue Delay	0.0	0.0		0.0	0.0		0.0	0.0	0.0	0.0	0.0	

Lane Group	EBL	EBT	EBR	WBL	WBT	WBR	NBL	NBT	NBR	SBL	SBT	SBR
Total Delay	21.8	22.2		36.9	24.3		5.8	5.5	4.7	9.9	8.5	
Queue Length 50th (ft)	12	19		84	36		8	57	9	19	83	
Queue Length 95th (ft)	30	40		132	65		m24	m98	m26	57	152	
Internal Link Dist (ft)		447			500			2245			611	
Turn Bay Length (ft)	100						340		225	390		
Base Capacity (vph)	467	572		485	571		382	2174	972	423	2136	
Starvation Cap Reductn	0	0		0	0		0	0	0	0	0	
Spillback Cap Reductn	0	0		0	0		0	0	0	0	0	
Storage Cap Reductn	0	0		0	0		0	0	0	0	0	
Reduced v/c Ratio	0.07	0.09		0.40	0.16		0.16	0.32	0.08	0.24	0.37	

Intersection Summary

Area Type: Other
Cycle Length: 75
Actuated Cycle Length: 75
Offset: 29 (39%), Referenced to phase 2:NBTL and 6:SBTL, Start of Green
Natural Cycle: 40
Control Type: Actuated-Coordinated
Description: Proposed Signal. Assume ped PB, coordination, signal will go out of coord w/ped calls.Ped FDW reduced for HCM 2010 output.
m Volume for 95th percentile queue is metered by upstream signal.

Splits and Phases: 100: STH 83/Rochester Street & Black Bear Boulvard

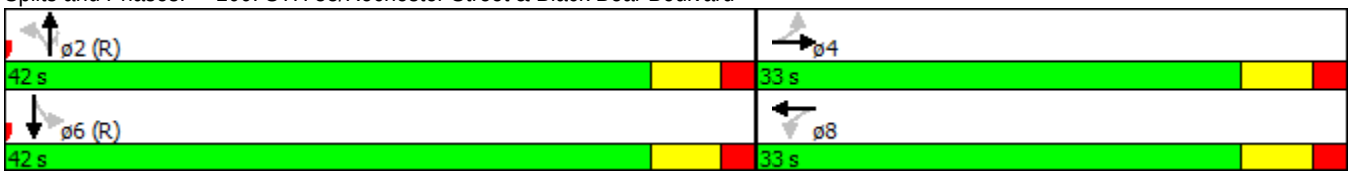

Movement	EBL	EBT	EBR	WBL	WBT	WBR	NBL	NBT	NBR	SBL	SBT	SBR
Lane Configurations												
Volume (veh/h)	30	1	45	180	1	85	55	645	145	95	685	40
Number	7	4	14	3	8	18	5	2	12	1	6	16
Initial Q (Qb), veh	0	0	0	0	0	0	0	0	0	0	0	0
Ped-Bike Adj(A_pbT)	1.00		1.00	1.00		1.00	1.00		1.00	1.00		1.00
Parking Bus, Adj	1.00	1.00	1.00	1.00	1.00	1.00	1.00	1.00	1.00	1.00	1.00	1.00
Adj Sat Flow, veh/h/ln	1863	1863	1900	1863	1863	1900	1845	1845	1845	1827	1827	1900
Adj Flow Rate, veh/h	33	1	49	196	1	92	60	701	79	103	745	43
Adj No. of Lanes	1	1	0	1	1	0	1	2	1	1	2	0
Peak Hour Factor	0.92	0.92	0.92	0.92	0.92	0.92	0.92	0.92	0.92	0.92	0.92	0.92
Percent Heavy Veh, %	2	2	2	2	2	2	3	3	3	4	4	4
Cap, veh/h	303	7	325	343	4	327	452	2213	990	523	2106	122
Arrive On Green	0.21	0.21	0.21	0.21	0.21	0.21	1.00	1.00	1.00	0.63	0.63	0.63
Sat Flow, veh/h	1298	32	1556	1349	17	1569	678	3505	1568	676	3336	192
Grp Volume(v), veh/h	33	0	50	196	0	93	60	701	79	103	387	401
Grp Sat Flow(s),veh/h/ln	1298	0	1588	1349	0	1586	678	1752	1568	676	1736	1793
Q Serve(g_s), s	1.6	0.0	1.9	10.4	0.0	3.7	1.3	0.0	0.0	5.0	7.9	8.0
Cycle Q Clear(g_c), s	5.3	0.0	1.9	12.3	0.0	3.7	9.2	0.0	0.0	5.0	7.9	8.0
Prop In Lane	1.00		0.98	1.00		0.99	1.00		1.00	1.00		0.11
Lane Grp Cap(c), veh/h	303	0	331	343	0	331	452	2213	990	523	1096	1132
V/C Ratio(X)	0.11	0.00	0.15	0.57	0.00	0.28	0.13	0.32	0.08	0.20	0.35	0.35
Avail Cap(c_a), veh/h	499	0	572	547	0	571	452	2213	990	523	1096	1132
HCM Platoon Ratio	1.00	1.00	1.00	1.00	1.00	1.00	2.00	2.00	2.00	1.00	1.00	1.00
Upstream Filter(I)	1.00	0.00	1.00	1.00	0.00	1.00	0.89	0.89	0.89	1.00	1.00	1.00
Uniform Delay (d), s/veh	27.2	0.0	24.3	29.3	0.0	25.0	0.8	0.0	0.0	6.0	6.6	6.6
Incr Delay (d2), s/veh	0.2	0.0	0.2	1.5	0.0	0.5	0.5	0.3	0.1	0.8	0.9	0.9
Initial Q Delay(d3),s/veh	0.0	0.0	0.0	0.0	0.0	0.0	0.0	0.0	0.0	0.0	0.0	0.0
%ile BackOfQ(95%),veh/ln	1.1	0.0	1.6	7.2	0.0	3.0	0.5	0.2	0.1	1.9	7.3	7.5
LnGrp Delay(d),s/veh	27.4	0.0	24.5	30.8	0.0	25.4	1.3	0.3	0.1	6.9	7.5	7.4
LnGrp LOS	C		C	C		C	A	A	A	A	A	A
Approach Vol, veh/h		83			289			840			891	
Approach Delay, s/veh		25.6			29.1			0.4			7.4	
Approach LOS		C			C			A			A	

Timer	1	2	3	4	5	6	7	8
Assigned Phs		2		4		6		8
Phs Duration (G+Y+Rc), s		53.4		21.6		53.4		21.6
Change Period (Y+Rc), s		6.0		6.0		6.0		6.0
Max Green Setting (Gmax), s		36.0		27.0		36.0		27.0
Max Q Clear Time (g_c+I1), s		11.2		7.3		10.0		14.3
Green Ext Time (p_c), s		12.9		1.5		13.2		1.3

Intersection Summary	
HCM 2010 Ctrl Delay	8.3
HCM 2010 LOS	A

Notes

User approved pedestrian interval to be less than phase max green.

Lane Group	EBL	EBT	EBR	WBL	WBT	WBR	NBL	NBT	NBR	SBL	SBT	SBR
Lane Configurations												
Volume (vph)	120	240	305	95	370	215	370	510	80	190	525	195
Ideal Flow (vphpl)	1900	1900	1900	1900	1900	1900	1900	1900	1900	1900	1900	1900
Lane Width (ft)	12	12	12	12	12	12	12	12	12	12	12	12
Grade (%)		0%			0%			0%			0%	
Storage Length (ft)	210		430	215		0	260		55	240		90
Storage Lanes	1		1	1		0	2		1	1		1
Taper Length (ft)	100			100			100			100		
Right Turn on Red			No			No			No			No
Link Speed (mph)		40			40			35			35	
Link Distance (ft)		705			1339			1052			2325	
Travel Time (s)		12.0			22.8			20.5			45.3	
Confl. Peds. (#/hr)												
Confl. Bikes (#/hr)												
Peak Hour Factor	0.93	0.93	0.93	0.93	0.93	0.93	0.93	0.93	0.93	0.93	0.93	0.93
Growth Factor	100%	100%	50%	100%	100%	100%	100%	100%	50%	100%	100%	50%
Heavy Vehicles (%)	3%	3%	3%	1%	1%	1%	2%	2%	2%	3%	3%	3%
Bus Blockages (#/hr)	0	0	0	0	0	0	0	0	0	0	0	0
Parking (#/hr)												
Mid-Block Traffic (%)		0%			0%			0%			0%	
Shared Lane Traffic (%)												
Lane Group Flow (vph)	129	258	164	102	629	0	398	548	43	204	565	105
Turn Type	pm+pt	NA	Perm	pm+pt	NA		Prot	NA	Perm	D.P+P	NA	Perm
Protected Phases	7	4		3	8		1	6		5	2	
Permitted Phases	4		4	8					6	6		2
Detector Phase	7	4	4	3	8		1	6	6	5	2	2
Switch Phase												
Minimum Initial (s)	6.0	8.0	8.0	6.0	8.0		8.0	15.0	15.0	6.0	15.0	15.0
Minimum Split (s)	10.5	14.6	14.6	10.5	14.6		12.5	21.4	21.4	10.5	21.4	21.4
Total Split (s)	10.5	24.0	24.0	10.5	24.0		16.0	29.5	29.5	11.0	24.5	24.5
Total Split (%)	14.0%	32.0%	32.0%	14.0%	32.0%		21.3%	39.3%	39.3%	14.7%	32.7%	32.7%
Maximum Green (s)	6.0	17.4	17.4	6.0	17.4		11.5	23.1	23.1	6.5	18.1	18.1
Yellow Time (s)	3.5	4.0	4.0	3.5	4.0		3.5	3.9	3.9	3.5	3.9	3.9
All-Red Time (s)	1.0	2.6	2.6	1.0	2.6		1.0	2.5	2.5	1.0	2.5	2.5
Lost Time Adjust (s)	0.0	0.0	0.0	0.0	0.0		0.0	0.0	0.0	0.0	0.0	0.0
Total Lost Time (s)	4.5	6.6	6.6	4.5	6.6		4.5	6.4	6.4	4.5	6.4	6.4
Lead/Lag	Lead	Lag	Lag	Lead	Lag		Lead	Lag	Lag	Lead	Lag	Lag
Lead-Lag Optimize?												
Vehicle Extension (s)	1.5	1.5	1.5	1.5	1.5		1.5	4.3	4.3	1.5	3.4	3.4
Minimum Gap (s)	1.5	1.5	1.5	1.5	1.5		1.5	2.0	2.0	1.5	2.0	2.0
Time Before Reduce (s)	20.0	30.0	30.0	20.0	30.0		20.0	19.0	19.0	20.0	20.0	20.0
Time To Reduce (s)	0.0	0.0	0.0	0.0	0.0		0.0	21.0	21.0	0.0	20.0	20.0
Recall Mode	None	None	None	None	None		None	C-Max	C-Max	None	C-Max	C-Max
Walk Time (s)		7.0	7.0		7.0			7.0	7.0		7.0	7.0
Flash Dont Walk (s)		35.0	35.0		37.0			32.0	32.0		37.0	37.0
Pedestrian Calls (#/hr)		0	0		0			0	0		0	0
v/c Ratio	0.53	0.64	0.48	0.29	0.86		0.80	0.44	0.08	0.48	0.55	0.23
Control Delay	23.3	33.5	29.9	17.2	41.0		44.0	21.3	19.0	12.8	22.7	19.8
Queue Delay	0.0	0.0	0.0	0.0	0.0		0.0	0.0	0.0	0.0	0.0	0.0

Lane Group	EBL	EBT	EBR	WBL	WBT	WBR	NBL	NBT	NBR	SBL	SBT	SBR
Total Delay	23.3	33.5	29.9	17.2	41.0		44.0	21.3	19.0	12.8	22.7	19.8
Queue Length 50th (ft)	30	112	69	29	145		92	108	14	41	133	44
Queue Length 95th (ft)	75	140	98	59	#224		#152	155	36	63	180	62
Internal Link Dist (ft)		625			1259			972			2245	
Turn Bay Length (ft)	210		430	215			260		55	240		90
Base Capacity (vph)	243	428	363	350	783		526	1245	556	426	1020	456
Starvation Cap Reductn	0	0	0	0	0		0	0	0	0	0	0
Spillback Cap Reductn	0	0	0	0	0		0	0	0	0	0	0
Storage Cap Reductn	0	0	0	0	0		0	0	0	0	0	0
Reduced v/c Ratio	0.53	0.60	0.45	0.29	0.80		0.76	0.44	0.08	0.48	0.55	0.23

Intersection Summary

Area Type: Other
Cycle Length: 75
Actuated Cycle Length: 75
Offset: 2 (3%), Referenced to phase 2:SBT and 6:NBSB, Start of Green
Natural Cycle: 70
Control Type: Actuated-Coordinated
Description: PB all app. Min splits reduced for coordination CL. Signal will go out of coord w/ped calls. SB LT FYA.
95th percentile volume exceeds capacity, queue may be longer.
Queue shown is maximum after two cycles.

Splits and Phases: 200: STH 83/Rochester Street & CTH N

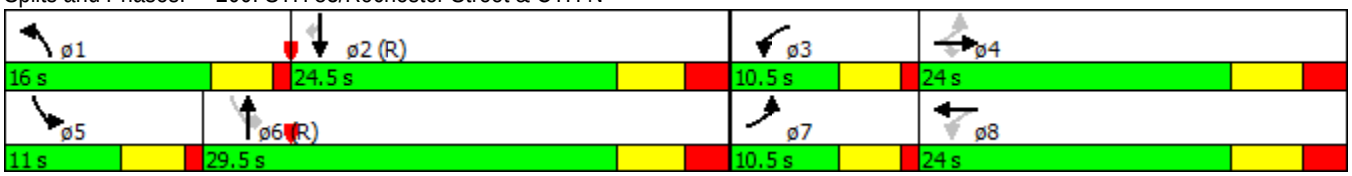

Movement	EBL	EBT	EBR	WBL	WBT	WBR	NBL	NBT	NBR	SBL	SBT	SBR
Lane Configurations												
Volume (veh/h)	120	240	305	95	370	215	370	510	80	190	525	195
Number	7	4	14	3	8	18	1	6	16	5	2	12
Initial Q (Qb), veh	0	0	0	0	0	0	0	0	0	0	0	0
Ped-Bike Adj(A_pbT)	1.00		1.00	1.00		1.00	1.00		1.00	1.00		1.00
Parking Bus, Adj	1.00	1.00	1.00	1.00	1.00	1.00	1.00	1.00	1.00	1.00	1.00	1.00
Adj Sat Flow, veh/h/ln	1845	1845	1845	1881	1881	1900	1863	1863	1863	1845	1845	1845
Adj Flow Rate, veh/h	129	258	164	102	398	231	398	548	43	204	565	105
Adj No. of Lanes	1	1	1	1	2	0	2	2	1	1	2	1
Peak Hour Factor	0.93	0.93	0.93	0.93	0.93	0.93	0.93	0.93	0.93	0.93	0.93	0.93
Percent Heavy Veh, %	3	3	3	1	1	1	2	2	2	3	3	3
Cap, veh/h	261	407	346	314	469	269	482	1164	521	416	965	432
Arrive On Green	0.08	0.22	0.22	0.07	0.21	0.21	0.14	0.33	0.33	0.09	0.28	0.28
Sat Flow, veh/h	1757	1845	1568	1792	2191	1256	3442	3539	1583	1757	3505	1568
Grp Volume(v), veh/h	129	258	164	102	324	305	398	548	43	204	565	105
Grp Sat Flow(s),veh/h/ln	1757	1845	1568	1792	1787	1660	1721	1770	1583	1757	1752	1568
Q Serve(g_s), s	4.2	9.5	6.8	3.2	13.0	13.3	8.4	9.2	1.4	5.8	10.4	3.9
Cycle Q Clear(g_c), s	4.2	9.5	6.8	3.2	13.0	13.3	8.4	9.2	1.4	5.8	10.4	3.9
Prop In Lane	1.00		1.00	1.00		0.76	1.00		1.00	1.00		1.00
Lane Grp Cap(c), veh/h	261	407	346	314	383	355	482	1164	521	416	965	432
V/C Ratio(X)	0.49	0.63	0.47	0.33	0.85	0.86	0.83	0.47	0.08	0.49	0.59	0.24
Avail Cap(c_a), veh/h	266	428	364	331	415	385	528	1164	521	416	965	432
HCM Platoon Ratio	1.00	1.00	1.00	1.00	1.00	1.00	1.00	1.00	1.00	1.00	1.00	1.00
Upstream Filter(I)	1.00	1.00	1.00	1.00	1.00	1.00	1.00	1.00	1.00	0.91	0.91	0.91
Uniform Delay (d), s/veh	21.7	26.5	25.4	21.0	28.3	28.4	31.4	20.0	17.4	15.3	23.5	21.1
Incr Delay (d2), s/veh	0.5	2.0	0.4	0.2	13.0	15.4	8.7	1.4	0.3	0.3	2.4	1.2
Initial Q Delay(d3),s/veh	0.0	0.0	0.0	0.0	0.0	0.0	0.0	0.0	0.0	0.0	0.0	0.0
%ile BackOfQ(95%),veh/ln	3.7	8.7	5.3	2.8	12.3	12.1	8.1	8.3	1.2	5.1	8.9	3.3
LnGrp Delay(d),s/veh	22.3	28.5	25.8	21.2	41.3	43.8	40.0	21.4	17.7	15.6	25.8	22.3
LnGrp LOS	C	C	C	C	D	D	D	C	B	B	C	C
Approach Vol, veh/h		551			731			989			874	
Approach Delay, s/veh		26.2			39.5			28.7			23.0	
Approach LOS		C			D			C			C	

Timer	1	2	3	4	5	6	7	8
Assigned Phs	1	2	3	4	5	6	7	8
Phs Duration (G+Y+Rc), s	15.0	27.0	9.8	23.2	11.0	31.1	10.3	22.7
Change Period (Y+Rc), s	4.5	6.4	4.5	6.6	4.5	6.4	4.5	6.6
Max Green Setting (Gmax), s	11.5	18.1	6.0	17.4	6.5	23.1	6.0	17.4
Max Q Clear Time (g_c+I1), s	10.4	12.4	5.2	11.5	7.8	11.2	6.2	15.3
Green Ext Time (p_c), s	0.1	4.0	0.0	1.6	0.0	7.2	0.0	0.8

Intersection Summary	
HCM 2010 Ctrl Delay	29.2
HCM 2010 LOS	C

Notes

User approved pedestrian interval to be less than phase max green.

Lane Group	EBL	EBT	EBR	WBL	WBT	WBR	NBL	NBT	NBR	SBL	SBT	SBR
Lane Configurations												
Volume (vph)	10	540	5	15	860	60	35	1	85	40	1	5
Ideal Flow (vphpl)	1900	1900	1900	1900	1900	1900	1900	1900	1900	1900	1900	1900
Lane Width (ft)	12	12	12	12	12	12	12	12	12	12	12	12
Grade (%)		0%			0%			0%			0%	
Storage Length (ft)	200		0	100		0	0		100	0		0
Storage Lanes	1		0	1		0	0		1	0		0
Taper Length (ft)	100			100			100			100		
Right Turn on Red			No			No			No			No
Link Speed (mph)		40			40			25			25	
Link Distance (ft)		1050			1554			303			468	
Travel Time (s)		17.9			26.5			8.3			12.8	
Confl. Peds. (#/hr)												
Confl. Bikes (#/hr)												
Peak Hour Factor	0.91	0.91	0.91	0.91	0.91	0.91	0.91	0.91	0.91	0.91	0.91	0.91
Growth Factor	100%	100%	100%	100%	100%	100%	100%	100%	50%	100%	100%	100%
Heavy Vehicles (%)	3%	3%	3%	1%	1%	1%	1%	1%	1%	5%	5%	5%
Bus Blockages (#/hr)	0	0	0	0	0	0	0	0	0	0	0	0
Parking (#/hr)												
Mid-Block Traffic (%)		0%			0%			0%			0%	
Shared Lane Traffic (%)												
Lane Group Flow (vph)	11	598	0	16	1011	0	0	39	47	0	50	0
Turn Type	Perm	NA		pm+pt	NA		Perm	NA	Perm	Perm	NA	
Protected Phases		6		5	2			8			4	
Permitted Phases	6			2			8		8	4		
Detector Phase	6	6		5	2		8	8	8	4	4	
Switch Phase												
Minimum Initial (s)	15.0	15.0		6.0	7.0		6.0	6.0	6.0	6.0	6.0	
Minimum Split (s)	25.7	25.7		11.7	25.7		24.0	24.0	24.0	24.0	24.0	
Total Split (s)	39.3	39.3		11.7	51.0		24.0	24.0	24.0	24.0	24.0	
Total Split (%)	52.4%	52.4%		15.6%	68.0%		32.0%	32.0%	32.0%	32.0%	32.0%	
Maximum Green (s)	33.6	33.6		6.0	45.3		20.0	20.0	20.0	20.0	20.0	
Yellow Time (s)	4.5	4.5		4.5	4.5		3.0	3.0	3.0	3.0	3.0	
All-Red Time (s)	1.2	1.2		1.2	1.2		1.0	1.0	1.0	1.0	1.0	
Lost Time Adjust (s)	0.0	0.0		0.0	0.0			0.0	0.0		0.0	
Total Lost Time (s)	5.7	5.7		5.7	5.7			4.0	4.0		4.0	
Lead/Lag	Lag	Lag		Lead								
Lead-Lag Optimize?												
Vehicle Extension (s)	5.5	5.5		4.5	5.5		3.0	3.0	3.0	3.0	3.0	
Minimum Gap (s)	2.0	2.0		0.2	2.0		1.5	1.5	1.5	1.5	1.5	
Time Before Reduce (s)	0.0	0.0		0.0	0.0		0.0	0.0	0.0	0.0	0.0	
Time To Reduce (s)	0.0	0.0		0.0	0.0		0.0	0.0	0.0	0.0	0.0	
Recall Mode	C-Max	C-Max		None	C-Max		None	None	None	None	None	
Walk Time (s)	6.0	6.0			6.0		6.0	6.0	6.0	6.0	6.0	
Flash Dont Walk (s)	14.0	14.0			14.0		14.0	14.0	14.0	14.0	14.0	
Pedestrian Calls (#/hr)	0	0			0		0	0	0	0	0	
v/c Ratio	0.03	0.42		0.03	0.68			0.24	0.27		0.35	
Control Delay	5.5	6.3		1.0	5.7			33.1	33.6		37.1	
Queue Delay	0.0	0.0		0.0	0.0			0.0	0.0		0.0	

Lane Group	EBL	EBT	EBR	WBL	WBT	WBR	NBL	NBT	NBR	SBL	SBT	SBR
Total Delay	5.5	6.3		1.0	5.7			33.1	33.6		37.1	
Queue Length 50th (ft)	1	72		0	103			17	21		22	
Queue Length 95th (ft)	9	256		m1	118			43	49		52	
Internal Link Dist (ft)		970			1474			223			388	
Turn Bay Length (ft)	200			100					100			
Base Capacity (vph)	350	1420		605	1493			396	426		344	
Starvation Cap Reductn	0	0		0	0			0	0		0	
Spillback Cap Reductn	0	0		0	0			0	0		0	
Storage Cap Reductn	0	0		0	0			0	0		0	
Reduced v/c Ratio	0.03	0.42		0.03	0.68			0.10	0.11		0.15	

Intersection Summary

Area Type: Other
Cycle Length: 75
Actuated Cycle Length: 75
Offset: 12 (16%), Referenced to phase 2:WBTL and 6:EBTL, Start of Green
Natural Cycle: 75
Control Type: Actuated-Coordinated
Description: TOD plans in peak school hours, coord w/ STH83/CTH NN Ped PB. No Xwalks.
m Volume for 95th percentile queue is metered by upstream signal.

Splits and Phases: 300: HS Dwy/Fairwinds Boulevard & CTH N

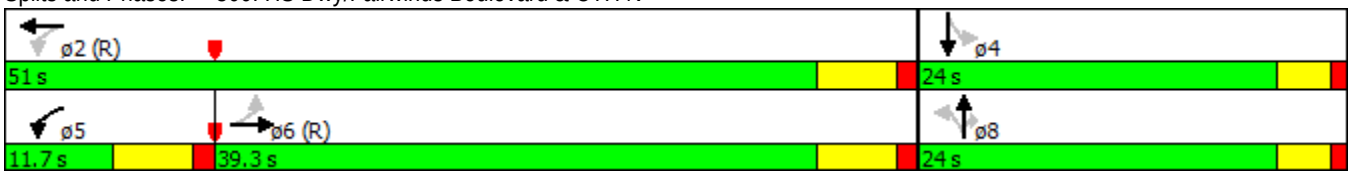

Movement	EBL	EBT	EBR	WBL	WBT	WBR	NBL	NBT	NBR	SBL	SBT	SBR
Lane Configurations												
Volume (veh/h)	10	540	5	15	860	60	35	1	85	40	1	5
Number	1	6	16	5	2	12	3	8	18	7	4	14
Initial Q (Qb), veh	0	0	0	0	0	0	0	0	0	0	0	0
Ped-Bike Adj(A_pbT)	1.00		1.00	1.00		1.00	1.00		1.00	1.00		1.00
Parking Bus, Adj	1.00	1.00	1.00	1.00	1.00	1.00	1.00	1.00	1.00	1.00	1.00	1.00
Adj Sat Flow, veh/h/ln	1845	1845	1900	1881	1881	1900	1900	1881	1881	1900	1810	1900
Adj Flow Rate, veh/h	11	593	5	16	945	66	38	1	47	44	1	5
Adj No. of Lanes	1	1	0	1	1	0	0	1	1	0	1	0
Peak Hour Factor	0.91	0.91	0.91	0.91	0.91	0.91	0.91	0.91	0.91	0.91	0.91	0.91
Percent Heavy Veh, %	3	3	3	1	1	1	1	1	1	5	5	5
Cap, veh/h	394	1264	11	586	1375	96	223	5	128	160	7	9
Arrive On Green	0.69	0.69	0.69	0.02	0.79	0.79	0.08	0.08	0.08	0.08	0.08	0.08
Sat Flow, veh/h	550	1827	15	1792	1738	121	1607	59	1599	877	93	108
Grp Volume(v), veh/h	11	0	598	16	0	1011	39	0	47	50	0	0
Grp Sat Flow(s),veh/h/ln	550	0	1842	1792	0	1860	1666	0	1599	1078	0	0
Q Serve(g_s), s	0.7	0.0	11.1	0.2	0.0	18.7	0.0	0.0	2.1	2.4	0.0	0.0
Cycle Q Clear(g_c), s	12.0	0.0	11.1	0.2	0.0	18.7	1.5	0.0	2.1	3.9	0.0	0.0
Prop In Lane	1.00		0.01	1.00		0.07	0.97		1.00	0.88		0.10
Lane Grp Cap(c), veh/h	394	0	1275	586	0	1471	228	0	128	176	0	0
V/C Ratio(X)	0.03	0.00	0.47	0.03	0.00	0.69	0.17	0.00	0.37	0.28	0.00	0.00
Avail Cap(c_a), veh/h	394	0	1275	688	0	1471	494	0	426	427	0	0
HCM Platoon Ratio	1.00	1.00	1.00	1.00	1.00	1.00	1.00	1.00	1.00	1.00	1.00	1.00
Upstream Filter(I)	1.00	0.00	1.00	1.00	0.00	1.00	1.00	0.00	1.00	1.00	0.00	0.00
Uniform Delay (d), s/veh	8.0	0.0	5.3	3.7	0.0	3.6	32.5	0.0	32.7	34.0	0.0	0.0
Incr Delay (d2), s/veh	0.1	0.0	1.2	0.0	0.0	2.6	0.4	0.0	1.8	0.9	0.0	0.0
Initial Q Delay(d3),s/veh	0.0	0.0	0.0	0.0	0.0	0.0	0.0	0.0	0.0	0.0	0.0	0.0
%ile BackOfQ(95%),veh/ln	0.2	0.0	9.9	0.2	0.0	15.6	1.4	0.0	1.8	1.9	0.0	0.0
LnGrp Delay(d),s/veh	8.2	0.0	6.5	3.7	0.0	6.2	32.8	0.0	34.5	34.8	0.0	0.0
LnGrp LOS	A		A	A		A	C		C	C		
Approach Vol, veh/h		609			1027			86			50	
Approach Delay, s/veh		6.5			6.2			33.7			34.8	
Approach LOS		A			A			C			C	

Timer	1	2	3	4	5	6	7	8
Assigned Phs		2		4	5	6		8
Phs Duration (G+Y+Rc), s		65.0		10.0	7.4	57.6		10.0
Change Period (Y+Rc), s		* 5.7		4.0	* 5.7	* 5.7		4.0
Max Green Setting (Gmax), s		* 45		20.0	* 6	* 34		20.0
Max Q Clear Time (g_c+I1), s		20.7		5.9	2.2	14.0		4.1
Green Ext Time (p_c), s		21.2		0.5	0.0	17.3		0.5

Intersection Summary	
HCM 2010 Ctrl Delay	8.5
HCM 2010 LOS	A

Notes

* HCM 2010 computational engine requires equal clearance times for the phases crossing the barrier.

APPENDIX G

TRANSPORTATION SYSTEM IMPROVEMENTS WITH TOTAL TRAFFIC OPERATIONAL ANALYSIS

G2. Horizon Year 2026 Total Traffic

Lane Group	EBL	EBT	EBR	WBL	WBT	WBR	NBL	NBT	NBR	SBL	SBT	SBR
Lane Configurations												
Volume (vph)	75	1	110	165	1	95	80	645	175	95	545	55
Ideal Flow (vphpl)	1900	1900	1900	1900	1900	1900	1900	1900	1900	1900	1900	1900
Lane Width (ft)	12	12	12	12	12	12	12	12	12	12	12	12
Grade (%)		0%			0%			0%			0%	
Storage Length (ft)	100		0	0		0	340		225	390		0
Storage Lanes	1		0	1		0	1		1	1		0
Taper Length (ft)	100			100			100			100		
Right Turn on Red			No			No			No			No
Link Speed (mph)		30			25			35			35	
Link Distance (ft)		527			580			2325			691	
Travel Time (s)		12.0			15.8			45.3			13.5	
Confl. Peds. (#/hr)												
Confl. Bikes (#/hr)												
Peak Hour Factor	0.88	0.88	0.88	0.88	0.88	0.88	0.88	0.88	0.88	0.88	0.88	0.88
Growth Factor	100%	100%	100%	100%	100%	100%	100%	100%	50%	100%	100%	100%
Heavy Vehicles (%)	2%	2%	2%	25%	25%	25%	5%	5%	5%	7%	7%	7%
Bus Blockages (#/hr)	0	0	0	0	0	0	0	0	0	0	0	0
Parking (#/hr)												
Mid-Block Traffic (%)		0%			0%			0%			0%	
Shared Lane Traffic (%)												
Lane Group Flow (vph)	85	126	0	188	109	0	91	733	99	108	681	0
Turn Type	Perm	NA		Perm	NA		Perm	NA	Perm	Perm	NA	
Protected Phases		4			8			2			6	
Permitted Phases	4			8			2		2	6		
Detector Phase	4	4		8	8		2	2	2	6	6	
Switch Phase												
Minimum Initial (s)	10.0	10.0		10.0	10.0		15.0	15.0	15.0	15.0	15.0	
Minimum Split (s)	16.0	16.0		16.0	16.0		21.0	21.0	21.0	21.0	21.0	
Total Split (s)	40.0	40.0		40.0	40.0		50.0	50.0	50.0	50.0	50.0	
Total Split (%)	44.4%	44.4%		44.4%	44.4%		55.6%	55.6%	55.6%	55.6%	55.6%	
Maximum Green (s)	34.0	34.0		34.0	34.0		44.0	44.0	44.0	44.0	44.0	
Yellow Time (s)	4.0	4.0		4.0	4.0		4.0	4.0	4.0	4.0	4.0	
All-Red Time (s)	2.0	2.0		2.0	2.0		2.0	2.0	2.0	2.0	2.0	
Lost Time Adjust (s)	0.0	0.0		0.0	0.0		0.0	0.0	0.0	0.0	0.0	
Total Lost Time (s)	6.0	6.0		6.0	6.0		6.0	6.0	6.0	6.0	6.0	
Lead/Lag												
Lead-Lag Optimize?												
Vehicle Extension (s)	3.0	3.0		3.0	3.0		3.0	3.0	3.0	3.0	3.0	
Minimum Gap (s)	3.0	3.0		3.0	3.0		3.0	3.0	3.0	3.0	3.0	
Time Before Reduce (s)	0.0	0.0		0.0	0.0		0.0	0.0	0.0	0.0	0.0	
Time To Reduce (s)	0.0	0.0		0.0	0.0		0.0	0.0	0.0	0.0	0.0	
Recall Mode	None	None		None	None		C-Max	C-Max	C-Max	C-Max	C-Max	
Walk Time (s)	7.0	7.0		7.0	7.0		7.0	7.0	7.0	7.0	7.0	
Flash Dont Walk (s)	24.0	24.0		24.0	24.0		24.0	24.0	24.0	24.0	24.0	
Pedestrian Calls (#/hr)	0	0		0	0		0	0	0	0	0	
v/c Ratio	0.27	0.33		0.75	0.35		0.22	0.34	0.10	0.28	0.33	
Control Delay	27.2	28.1		48.6	28.9		7.4	6.2	5.8	12.5	9.8	
Queue Delay	0.0	0.0		0.0	0.0		0.0	0.0	0.0	0.0	0.0	

Lane Group	EBL	EBT	EBR	WBL	WBT	WBR	NBL	NBT	NBR	SBL	SBT	SBR
Total Delay	27.2	28.1		48.6	28.9		7.4	6.2	5.8	12.5	9.8	
Queue Length 50th (ft)	39	59		99	51		9	36	9	25	87	
Queue Length 95th (ft)	66	90		147	82		m27	m141	m22	72	155	
Internal Link Dist (ft)		447			500			2245			611	
Turn Bay Length (ft)	100						340		225	390		
Base Capacity (vph)	483	598		388	488		423	2140	957	387	2071	
Starvation Cap Reductn	0	0		0	0		0	0	0	0	0	
Spillback Cap Reductn	0	0		0	0		0	0	0	0	0	
Storage Cap Reductn	0	0		0	0		0	0	0	0	0	
Reduced v/c Ratio	0.18	0.21		0.48	0.22		0.22	0.34	0.10	0.28	0.33	

Intersection Summary

Area Type: Other
Cycle Length: 90
Actuated Cycle Length: 90
Offset: 51 (57%), Referenced to phase 2:NBTL and 6:SBTL, Start of Green
Natural Cycle: 40
Control Type: Actuated-Coordinated
Description: Proposed Signal. Assume ped PB, coordination, signal will go out of coord w/ped calls.Ped FDW reduced for HCM 2010 output.
m Volume for 95th percentile queue is metered by upstream signal.

Splits and Phases: 100: STH 83/Rochester Street & Black Bear Boulvard

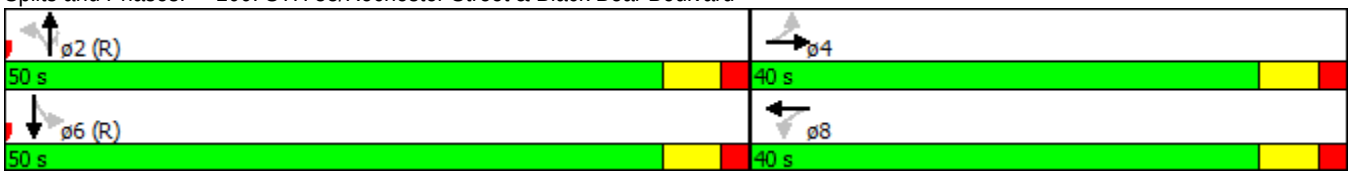

Movement	EBL	EBT	EBR	WBL	WBT	WBR	NBL	NBT	NBR	SBL	SBT	SBR
Lane Configurations												
Volume (veh/h)	75	1	110	165	1	95	80	645	175	95	545	55
Number	7	4	14	3	8	18	5	2	12	1	6	16
Initial Q (Qb), veh	0	0	0	0	0	0	0	0	0	0	0	0
Ped-Bike Adj(A_pbT)	1.00		1.00	1.00		1.00	1.00		1.00	1.00		1.00
Parking Bus, Adj	1.00	1.00	1.00	1.00	1.00	1.00	1.00	1.00	1.00	1.00	1.00	1.00
Adj Sat Flow, veh/h/ln	1863	1863	1900	1520	1520	1900	1810	1810	1810	1776	1776	1900
Adj Flow Rate, veh/h	85	1	125	188	1	108	91	733	99	108	619	62
Adj No. of Lanes	1	1	0	1	1	0	1	2	1	1	2	0
Peak Hour Factor	0.88	0.88	0.88	0.88	0.88	0.88	0.88	0.88	0.88	0.88	0.88	0.88
Percent Heavy Veh, %	2	2	2	25	25	25	5	5	5	7	7	7
Cap, veh/h	356	4	443	306	3	361	433	2011	899	330	1812	181
Arrive On Green	0.28	0.28	0.28	0.28	0.28	0.28	0.19	0.19	0.19	0.58	0.58	0.58
Sat Flow, veh/h	1279	13	1573	1028	12	1282	735	3438	1538	626	3098	310
Grp Volume(v), veh/h	85	0	126	188	0	109	91	733	99	108	337	344
Grp Sat Flow(s),veh/h/ln	1279	0	1585	1028	0	1294	735	1719	1538	626	1687	1721
Q Serve(g_s), s	5.0	0.0	5.6	15.7	0.0	5.9	9.8	16.7	4.8	11.3	9.3	9.3
Cycle Q Clear(g_c), s	11.0	0.0	5.6	21.3	0.0	5.9	19.1	16.7	4.8	27.9	9.3	9.3
Prop In Lane	1.00		0.99	1.00		0.99	1.00		1.00	1.00		0.18
Lane Grp Cap(c), veh/h	356	0	447	306	0	365	433	2011	899	330	986	1006
V/C Ratio(X)	0.24	0.00	0.28	0.61	0.00	0.30	0.21	0.36	0.11	0.33	0.34	0.34
Avail Cap(c_a), veh/h	479	0	599	405	0	489	433	2011	899	330	986	1006
HCM Platoon Ratio	1.00	1.00	1.00	1.00	1.00	1.00	0.33	0.33	0.33	1.00	1.00	1.00
Upstream Filter(I)	1.00	0.00	1.00	1.00	0.00	1.00	0.58	0.58	0.58	1.00	1.00	1.00
Uniform Delay (d), s/veh	29.6	0.0	25.2	33.5	0.0	25.3	26.9	21.8	17.0	19.6	9.7	9.7
Incr Delay (d2), s/veh	0.3	0.0	0.3	2.0	0.0	0.5	0.6	0.3	0.1	2.6	0.9	0.9
Initial Q Delay(d3),s/veh	0.0	0.0	0.0	0.0	0.0	0.0	0.0	0.0	0.0	0.0	0.0	0.0
%ile BackOfQ(50%),veh/ln	1.8	0.0	2.5	4.6	0.0	2.2	2.1	8.0	2.1	2.2	4.6	4.7
LnGrp Delay(d),s/veh	30.0	0.0	25.6	35.5	0.0	25.8	27.5	22.1	17.2	22.2	10.6	10.6
LnGrp LOS	C		C	D		C	C	C	B	C	B	B
Approach Vol, veh/h		211			297			923			789	
Approach Delay, s/veh		27.3			32.0			22.1			12.2	
Approach LOS		C			C			C			B	

Timer	1	2	3	4	5	6	7	8
Assigned Phs		2		4		6		8
Phs Duration (G+Y+Rc), s		58.6		31.4		58.6		31.4
Change Period (Y+Rc), s		6.0		6.0		6.0		6.0
Max Green Setting (Gmax), s		44.0		34.0		44.0		34.0
Max Q Clear Time (g_c+I1), s		21.1		13.0		29.9		23.3
Green Ext Time (p_c), s		12.3		2.7		9.0		2.1

Intersection Summary	
HCM 2010 Ctrl Delay	20.4
HCM 2010 LOS	C

Notes

User approved pedestrian interval to be less than phase max green.

Lane Group	EBL	EBT	EBR	WBL	WBT	WBR	NBL	NBT	NBR	SBL	SBT	SBR
Lane Configurations												
Volume (vph)	210	440	390	35	400	200	310	490	75	240	505	75
Ideal Flow (vphpl)	1900	1900	1900	1900	1900	1900	1900	1900	1900	1900	1900	1900
Lane Width (ft)	12	12	12	12	12	12	12	12	12	12	12	12
Grade (%)		0%			0%			0%			0%	
Storage Length (ft)	210		430	215		0	260		55	240		90
Storage Lanes	1		1	1		0	2		1	1		1
Taper Length (ft)	100			100			100			100		
Right Turn on Red			No			No			No			No
Link Speed (mph)		40			40			35			35	
Link Distance (ft)		705			1339			1052			2325	
Travel Time (s)		12.0			22.8			20.5			45.3	
Confl. Peds. (#/hr)												
Confl. Bikes (#/hr)												
Peak Hour Factor	0.81	0.81	0.81	0.81	0.81	0.81	0.81	0.81	0.81	0.81	0.81	0.81
Growth Factor	100%	100%	50%	100%	100%	100%	100%	100%	50%	100%	100%	50%
Heavy Vehicles (%)	5%	5%	5%	5%	5%	5%	10%	10%	10%	7%	7%	7%
Bus Blockages (#/hr)	0	0	0	0	0	0	0	0	0	0	0	0
Parking (#/hr)												
Mid-Block Traffic (%)		0%			0%			0%			0%	
Shared Lane Traffic (%)												
Lane Group Flow (vph)	259	543	241	43	741	0	383	605	46	296	623	46
Turn Type	pm+pt	NA	Perm	pm+pt	NA		Prot	NA	Perm	D.P+P	NA	Perm
Protected Phases	7	4		3	8		1	6		5	2	
Permitted Phases	4		4	8					6	6		2
Detector Phase	7	4	4	3	8		1	6	6	5	2	2
Switch Phase												
Minimum Initial (s)	6.0	8.0	8.0	6.0	8.0		8.0	15.0	15.0	6.0	15.0	15.0
Minimum Split (s)	10.5	14.6	14.6	10.5	14.6		12.5	21.4	21.4	10.5	21.4	21.4
Total Split (s)	14.0	36.0	36.0	10.5	32.5		17.0	28.5	28.5	15.0	26.5	26.5
Total Split (%)	15.6%	40.0%	40.0%	11.7%	36.1%		18.9%	31.7%	31.7%	16.7%	29.4%	29.4%
Maximum Green (s)	9.5	29.4	29.4	6.0	25.9		12.5	22.1	22.1	10.5	20.1	20.1
Yellow Time (s)	3.5	4.0	4.0	3.5	4.0		3.5	3.9	3.9	3.5	3.9	3.9
All-Red Time (s)	1.0	2.6	2.6	1.0	2.6		1.0	2.5	2.5	1.0	2.5	2.5
Lost Time Adjust (s)	0.0	0.0	0.0	0.0	0.0		0.0	0.0	0.0	0.0	0.0	0.0
Total Lost Time (s)	4.5	6.6	6.6	4.5	6.6		4.5	6.4	6.4	4.5	6.4	6.4
Lead/Lag	Lead	Lag	Lag	Lead	Lag		Lead	Lag	Lag	Lead	Lag	Lag
Lead-Lag Optimize?												
Vehicle Extension (s)	1.5	1.5	1.5	1.5	1.5		1.5	4.3	4.3	1.5	3.4	3.4
Minimum Gap (s)	1.5	1.5	1.5	1.5	1.5		1.5	2.0	2.0	1.5	2.0	2.0
Time Before Reduce (s)	20.0	30.0	30.0	20.0	30.0		20.0	19.0	19.0	20.0	20.0	20.0
Time To Reduce (s)	0.0	0.0	0.0	0.0	0.0		0.0	21.0	21.0	0.0	20.0	20.0
Recall Mode	None	None	None	None	None		None	C-Max	C-Max	None	C-Max	C-Max
Walk Time (s)		7.0	7.0		7.0			7.0	7.0		7.0	7.0
Flash Dont Walk (s)		35.0	35.0		37.0			32.0	32.0		37.0	37.0
Pedestrian Calls (#/hr)		0	0		0			0	0		0	0
v/c Ratio	0.91	0.86	0.45	0.18	0.86		0.88	0.68	0.12	0.88	0.74	0.12
Control Delay	44.8	34.2	22.5	15.7	42.9		61.6	34.6	27.3	47.0	32.6	23.4
Queue Delay	0.0	0.0	0.0	0.0	0.0		0.0	0.0	0.0	0.0	0.0	0.0

Lane Group	EBL	EBT	EBR	WBL	WBT	WBR	NBL	NBT	NBR	SBL	SBT	SBR
Total Delay	44.8	34.2	22.5	15.7	42.9		61.6	34.6	27.3	47.0	32.6	23.4
Queue Length 50th (ft)	74	264	87	13	203		111	167	20	101	188	17
Queue Length 95th (ft)	m#103	m#313	m102	28	236		#156	200	44	#191	147	36
Internal Link Dist (ft)		625			1259			972			2245	
Turn Bay Length (ft)	210		430	215			260		55	240		90
Base Capacity (vph)	285	630	535	233	939		442	888	397	337	847	379
Starvation Cap Reductn	0	0	0	0	0		0	0	0	0	0	0
Spillback Cap Reductn	0	0	0	0	0		0	0	0	0	0	0
Storage Cap Reductn	0	0	0	0	0		0	0	0	0	0	0
Reduced v/c Ratio	0.91	0.86	0.45	0.18	0.79		0.87	0.68	0.12	0.88	0.74	0.12

Intersection Summary

Area Type: Other
Cycle Length: 90
Actuated Cycle Length: 90
Offset: 88 (98%), Referenced to phase 2:SBT and 6:NBSB, Start of Green
Natural Cycle: 90
Control Type: Actuated-Coordinated
Description: PB all app. Min splits reduced for coordination CL. Signal will go out of coord w/ped calls. SB LT FYA.
95th percentile volume exceeds capacity, queue may be longer.
Queue shown is maximum after two cycles.
m Volume for 95th percentile queue is metered by upstream signal.

Splits and Phases: 200: STH 83/Rochester Street & CTH N

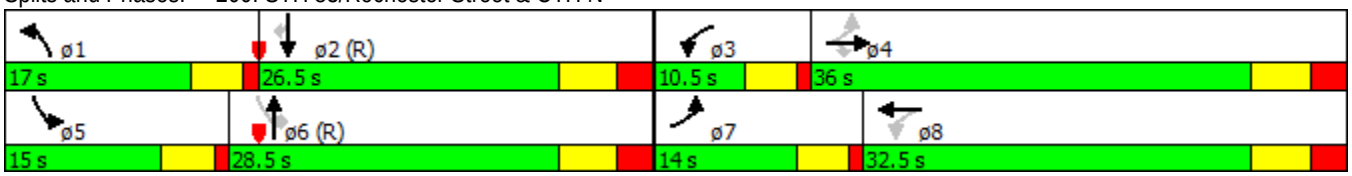

Movement	EBL	EBT	EBR	WBL	WBT	WBR	NBL	NBT	NBR	SBL	SBT	SBR
Lane Configurations												
Volume (veh/h)	210	440	390	35	400	200	310	490	75	240	505	75
Number	7	4	14	3	8	18	1	6	16	5	2	12
Initial Q (Qb), veh	0	0	0	0	0	0	0	0	0	0	0	0
Ped-Bike Adj(A_pbT)	1.00		1.00	1.00		1.00	1.00		1.00	1.00		1.00
Parking Bus, Adj	1.00	1.00	1.00	1.00	1.00	1.00	1.00	1.00	1.00	1.00	1.00	1.00
Adj Sat Flow, veh/h/ln	1810	1810	1810	1810	1810	1900	1727	1727	1727	1776	1776	1776
Adj Flow Rate, veh/h	259	543	241	43	494	247	383	605	46	296	623	46
Adj No. of Lanes	1	1	1	1	2	0	2	2	1	1	2	1
Peak Hour Factor	0.81	0.81	0.81	0.81	0.81	0.81	0.81	0.81	0.81	0.81	0.81	0.81
Percent Heavy Veh, %	5	5	5	5	5	5	10	10	10	7	7	7
Cap, veh/h	294	580	493	175	577	287	443	900	403	359	850	380
Arrive On Green	0.11	0.32	0.32	0.04	0.26	0.26	0.14	0.27	0.27	0.12	0.25	0.25
Sat Flow, veh/h	1723	1810	1538	1723	2226	1108	3191	3282	1468	1691	3374	1509
Grp Volume(v), veh/h	259	543	241	43	381	360	383	605	46	296	623	46
Grp Sat Flow(s),veh/h/ln	1723	1810	1538	1723	1719	1614	1596	1641	1468	1691	1687	1509
Q Serve(g_s), s	9.5	26.2	11.4	1.6	19.0	19.1	10.6	14.8	2.1	10.5	15.2	2.1
Cycle Q Clear(g_c), s	9.5	26.2	11.4	1.6	19.0	19.1	10.6	14.8	2.1	10.5	15.2	2.1
Prop In Lane	1.00		1.00	1.00		0.69	1.00		1.00	1.00		1.00
Lane Grp Cap(c), veh/h	294	580	493	175	446	418	443	900	403	359	850	380
V/C Ratio(X)	0.88	0.94	0.49	0.25	0.86	0.86	0.86	0.67	0.11	0.82	0.73	0.12
Avail Cap(c_a), veh/h	294	591	502	215	495	464	443	900	403	359	850	380
HCM Platoon Ratio	1.00	1.00	1.00	1.00	1.00	1.00	1.00	1.00	1.00	1.00	1.00	1.00
Upstream Filter(I)	1.00	1.00	1.00	1.00	1.00	1.00	1.00	1.00	1.00	0.91	0.91	0.91
Uniform Delay (d), s/veh	23.6	29.7	24.6	25.0	31.7	31.8	37.9	29.1	24.5	23.7	30.9	26.0
Incr Delay (d2), s/veh	24.2	21.8	0.3	0.3	11.7	12.9	15.5	4.0	0.6	12.6	5.1	0.6
Initial Q Delay(d3),s/veh	0.0	0.0	0.0	0.0	0.0	0.0	0.0	0.0	0.0	0.0	0.0	0.0
%ile BackOfQ(50%),veh/ln	3.9	16.6	4.9	0.8	10.4	10.0	5.6	7.1	0.9	3.7	7.7	0.9
LnGrp Delay(d),s/veh	47.8	51.5	24.9	25.2	43.4	44.7	53.4	33.1	25.0	36.2	36.0	26.6
LnGrp LOS	D	D	C	C	D	D	D	C	C	D	D	C
Approach Vol, veh/h		1043			784			1034			965	
Approach Delay, s/veh		44.4			43.0			40.2			35.6	
Approach LOS		D			D			D			D	

Timer	1	2	3	4	5	6	7	8
Assigned Phs	1	2	3	4	5	6	7	8
Phs Duration (G+Y+Rc), s	17.0	29.1	8.5	35.5	15.0	31.1	14.0	29.9
Change Period (Y+Rc), s	4.5	6.4	4.5	6.6	4.5	6.4	4.5	6.6
Max Green Setting (Gmax), s	12.5	20.1	6.0	29.4	10.5	22.1	9.5	25.9
Max Q Clear Time (g_c+I1), s	12.6	17.2	3.6	28.2	12.5	16.8	11.5	21.1
Green Ext Time (p_c), s	0.0	2.2	0.0	0.7	0.0	3.9	0.0	2.1

Intersection Summary	
HCM 2010 Ctrl Delay	40.8
HCM 2010 LOS	D

Notes

User approved pedestrian interval to be less than phase max green.

Lane Group	EBL	EBT	EBR	WBL	WBT	WBR	NBL	NBT	NBR	SBL	SBT	SBR
Lane Configurations												
Volume (vph)	5	685	35	90	655	40	65	1	275	80	1	10
Ideal Flow (vphpl)	1900	1900	1900	1900	1900	1900	1900	1900	1900	1900	1900	1900
Lane Width (ft)	12	12	12	12	12	12	12	12	12	12	12	12
Grade (%)		0%			0%			0%			0%	
Storage Length (ft)	200		0	100		0	0		100	0		0
Storage Lanes	1		0	1		0	0		1	0		0
Taper Length (ft)	100			100			100			100		
Right Turn on Red			No			No			No			No
Link Speed (mph)		40			40			25			25	
Link Distance (ft)		1050			1554			303			468	
Travel Time (s)		17.9			26.5			8.3			12.8	
Confl. Peds. (#/hr)												
Confl. Bikes (#/hr)												
Peak Hour Factor	0.72	0.72	0.72	0.72	0.72	0.72	0.72	0.72	0.72	0.72	0.72	0.72
Growth Factor	100%	100%	100%	100%	100%	100%	100%	100%	50%	100%	100%	100%
Heavy Vehicles (%)	2%	2%	2%	5%	5%	5%	12%	12%	12%	2%	2%	2%
Bus Blockages (#/hr)	0	0	0	0	0	0	0	0	0	0	0	0
Parking (#/hr)												
Mid-Block Traffic (%)		0%			0%			0%			0%	
Shared Lane Traffic (%)												
Lane Group Flow (vph)	7	1000	0	125	966	0	0	91	191	0	126	0
Turn Type	Perm	NA		pm+pt	NA		Perm	NA	Perm	Perm	NA	
Protected Phases		6		5	2			8			4	
Permitted Phases	6			2			8		8	4		
Detector Phase	6	6		5	2		8	8	8	4	4	
Switch Phase												
Minimum Initial (s)	15.0	15.0		6.0	7.0		6.0	6.0	6.0	6.0	6.0	
Minimum Split (s)	25.7	25.7		11.7	25.7		24.0	24.0	24.0	24.0	24.0	
Total Split (s)	54.0	54.0		12.0	66.0		24.0	24.0	24.0	24.0	24.0	
Total Split (%)	60.0%	60.0%		13.3%	73.3%		26.7%	26.7%	26.7%	26.7%	26.7%	
Maximum Green (s)	48.3	48.3		6.3	60.3		20.0	20.0	20.0	20.0	20.0	
Yellow Time (s)	4.5	4.5		4.5	4.5		3.0	3.0	3.0	3.0	3.0	
All-Red Time (s)	1.2	1.2		1.2	1.2		1.0	1.0	1.0	1.0	1.0	
Lost Time Adjust (s)	0.0	0.0		0.0	0.0			0.0	0.0		0.0	
Total Lost Time (s)	5.7	5.7		5.7	5.7			4.0	4.0		4.0	
Lead/Lag	Lag	Lag		Lead								
Lead-Lag Optimize?												
Vehicle Extension (s)	5.5	5.5		4.5	5.5		3.0	3.0	3.0	3.0	3.0	
Minimum Gap (s)	2.0	2.0		0.2	2.0		1.5	1.5	1.5	1.5	1.5	
Time Before Reduce (s)	0.0	0.0		0.0	0.0		0.0	0.0	0.0	0.0	0.0	
Time To Reduce (s)	0.0	0.0		0.0	0.0		0.0	0.0	0.0	0.0	0.0	
Recall Mode	C-Max	C-Max		None	C-Max		None	None	None	None	None	
Walk Time (s)	6.0	6.0			6.0		6.0	6.0	6.0	6.0	6.0	
Flash Dont Walk (s)	14.0	14.0			14.0		14.0	14.0	14.0	14.0	14.0	
Pedestrian Calls (#/hr)	0	0			0		0	0	0	0	0	
v/c Ratio	0.03	0.94		0.62	0.76			0.41	0.73		0.55	
Control Delay	10.2	36.1		37.0	8.0			37.2	51.0		42.2	
Queue Delay	0.0	0.0		0.0	0.0			0.0	0.0		0.0	

Lane Group	EBL	EBT	EBR	WBL	WBT	WBR	NBL	NBT	NBR	SBL	SBT	SBR
Total Delay	10.2	36.1		37.0	8.0			37.2	51.0		42.2	
Queue Length 50th (ft)	2	496		31	92			46	102		65	
Queue Length 95th (ft)	7	492		m51	53			69	129		90	
Internal Link Dist (ft)		970			1474			223			388	
Turn Bay Length (ft)	200			100					100			
Base Capacity (vph)	254	1069		200	1275			272	320		280	
Starvation Cap Reductn	0	0		0	0			0	0		0	
Spillback Cap Reductn	0	0		0	0			0	0		0	
Storage Cap Reductn	0	0		0	0			0	0		0	
Reduced v/c Ratio	0.03	0.94		0.63	0.76			0.33	0.60		0.45	

Intersection Summary

Area Type: Other
Cycle Length: 90
Actuated Cycle Length: 90
Offset: 81 (90%), Referenced to phase 2:WBTL and 6:EBTL, Start of Green
Natural Cycle: 90
Control Type: Actuated-Coordinated
Description: TOD plans in peak school hours, coord w/ STH83/CTH NN Ped PB. No Xwalks.
m Volume for 95th percentile queue is metered by upstream signal.

Splits and Phases: 300: HS Dwy/Fairwinds Boulevard & CTH N

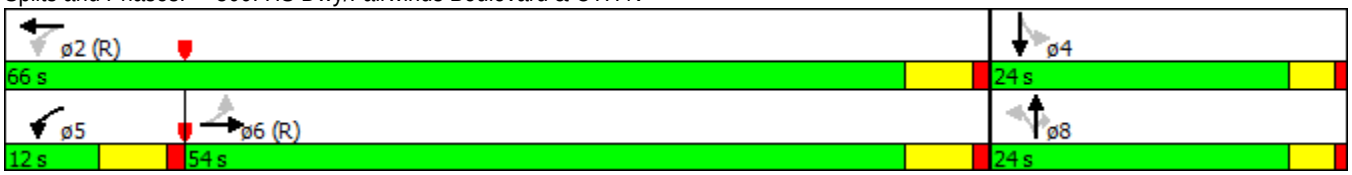

Movement	EBL	EBT	EBR	WBL	WBT	WBR	NBL	NBT	NBR	SBL	SBT	SBR
Lane Configurations												
Volume (veh/h)	5	685	35	90	655	40	65	1	275	80	1	10
Number	1	6	16	5	2	12	3	8	18	7	4	14
Initial Q (Qb), veh	0	0	0	0	0	0	0	0	0	0	0	0
Ped-Bike Adj(A_pbT)	1.00		1.00	1.00		1.00	1.00		1.00	1.00		1.00
Parking Bus, Adj	1.00	1.00	1.00	1.00	1.00	1.00	1.00	1.00	1.00	1.00	1.00	1.00
Adj Sat Flow, veh/h/ln	1863	1863	1900	1810	1810	1900	1900	1696	1696	1900	1863	1900
Adj Flow Rate, veh/h	7	951	49	125	910	56	90	1	191	111	1	14
Adj No. of Lanes	1	1	0	1	1	0	0	1	1	0	1	0
Peak Hour Factor	0.72	0.72	0.72	0.72	0.72	0.72	0.72	0.72	0.72	0.72	0.72	0.72
Percent Heavy Veh, %	2	2	2	5	5	5	12	12	12	2	2	2
Cap, veh/h	297	1027	53	241	1201	74	339	3	260	212	6	18
Arrive On Green	0.58	0.58	0.58	0.06	0.71	0.71	0.18	0.18	0.18	0.18	0.18	0.18
Sat Flow, veh/h	579	1756	90	1723	1687	104	1439	18	1442	761	34	99
Grp Volume(v), veh/h	7	0	1000	125	0	966	91	0	191	126	0	0
Grp Sat Flow(s),veh/h/ln	579	0	1847	1723	0	1791	1457	0	1442	894	0	0
Q Serve(g_s), s	0.7	0.0	44.1	2.3	0.0	30.3	0.0	0.0	11.3	8.6	0.0	0.0
Cycle Q Clear(g_c), s	19.6	0.0	44.1	2.3	0.0	30.3	4.8	0.0	11.3	13.3	0.0	0.0
Prop In Lane	1.00		0.05	1.00		0.06	0.99		1.00	0.88		0.11
Lane Grp Cap(c), veh/h	297	0	1080	241	0	1275	342	0	260	236	0	0
V/C Ratio(X)	0.02	0.00	0.93	0.52	0.00	0.76	0.27	0.00	0.73	0.53	0.00	0.00
Avail Cap(c_a), veh/h	297	0	1080	252	0	1275	396	0	320	288	0	0
HCM Platoon Ratio	1.00	1.00	1.00	1.00	1.00	1.00	1.00	1.00	1.00	1.00	1.00	1.00
Upstream Filter(I)	1.00	0.00	1.00	1.00	0.00	1.00	1.00	0.00	1.00	1.00	0.00	0.00
Uniform Delay (d), s/veh	17.8	0.0	16.9	20.1	0.0	8.1	32.2	0.0	34.9	37.6	0.0	0.0
Incr Delay (d2), s/veh	0.1	0.0	14.5	2.9	0.0	4.2	0.4	0.0	6.7	1.9	0.0	0.0
Initial Q Delay(d3),s/veh	0.0	0.0	0.0	0.0	0.0	0.0	0.0	0.0	0.0	0.0	0.0	0.0
%ile BackOfQ(50%),veh/ln	0.1	0.0	26.6	2.1	0.0	16.3	2.0	0.0	4.9	3.2	0.0	0.0
LnGrp Delay(d),s/veh	17.9	0.0	31.4	23.0	0.0	12.3	32.6	0.0	41.5	39.5	0.0	0.0
LnGrp LOS	B		C	C		B	C		D	D		
Approach Vol, veh/h		1007			1091			282			126	
Approach Delay, s/veh		31.3			13.6			38.6			39.5	
Approach LOS		C			B			D			D	

Timer	1	2	3	4	5	6	7	8
Assigned Phs		2		4	5	6		8
Phs Duration (G+Y+Rc), s		69.8		20.2	11.4	58.3		20.2
Change Period (Y+Rc), s		* 5.7		4.0	* 5.7	* 5.7		4.0
Max Green Setting (Gmax), s		* 60		20.0	* 6.3	* 48		20.0
Max Q Clear Time (g_c+I1), s		32.3		15.3	4.3	46.1		13.3
Green Ext Time (p_c), s		26.1		0.9	0.1	2.1		1.2

Intersection Summary	
HCM 2010 Ctrl Delay	24.8
HCM 2010 LOS	C

Notes

* HCM 2010 computational engine requires equal clearance times for the phases crossing the barrier.

Lane Group	EBL	EBT	EBR	WBL	WBT	WBR	NBL	NBT	NBR	SBL	SBT	SBR
Lane Configurations												
Volume (vph)	85	1	120	180	1	85	120	695	145	95	745	85
Ideal Flow (vphpl)	1900	1900	1900	1900	1900	1900	1900	1900	1900	1900	1900	1900
Lane Width (ft)	12	12	12	12	12	12	12	12	12	12	12	12
Grade (%)		0%			0%			0%			0%	
Storage Length (ft)	100		0	0		0	340		225	390		0
Storage Lanes	1		0	1		0	1		1	1		0
Taper Length (ft)	100			100			100			100		
Right Turn on Red			No			No			No			No
Link Speed (mph)		30			25			35			35	
Link Distance (ft)		527			580			2325			691	
Travel Time (s)		12.0			15.8			45.3			13.5	
Confl. Peds. (#/hr)												
Confl. Bikes (#/hr)												
Peak Hour Factor	0.92	0.92	0.92	0.92	0.92	0.92	0.92	0.92	0.92	0.92	0.92	0.92
Growth Factor	100%	100%	100%	100%	100%	100%	100%	100%	50%	100%	100%	100%
Heavy Vehicles (%)	2%	2%	2%	2%	2%	2%	3%	3%	3%	4%	4%	4%
Bus Blockages (#/hr)	0	0	0	0	0	0	0	0	0	0	0	0
Parking (#/hr)												
Mid-Block Traffic (%)		0%			0%			0%			0%	
Shared Lane Traffic (%)												
Lane Group Flow (vph)	92	131	0	196	93	0	130	755	79	103	902	0
Turn Type	Perm	NA		Perm	NA		Perm	NA	Perm	Perm	NA	
Protected Phases		4			8			2			6	
Permitted Phases	4			8			2		2	6		
Detector Phase	4	4		8	8		2	2	2	6	6	
Switch Phase												
Minimum Initial (s)	10.0	10.0		10.0	10.0		15.0	15.0	15.0	15.0	15.0	
Minimum Split (s)	16.0	16.0		16.0	16.0		21.0	21.0	21.0	21.0	21.0	
Total Split (s)	27.0	27.0		27.0	27.0		48.0	48.0	48.0	48.0	48.0	
Total Split (%)	36.0%	36.0%		36.0%	36.0%		64.0%	64.0%	64.0%	64.0%	64.0%	
Maximum Green (s)	21.0	21.0		21.0	21.0		42.0	42.0	42.0	42.0	42.0	
Yellow Time (s)	4.0	4.0		4.0	4.0		4.0	4.0	4.0	4.0	4.0	
All-Red Time (s)	2.0	2.0		2.0	2.0		2.0	2.0	2.0	2.0	2.0	
Lost Time Adjust (s)	0.0	0.0		0.0	0.0		0.0	0.0	0.0	0.0	0.0	
Total Lost Time (s)	6.0	6.0		6.0	6.0		6.0	6.0	6.0	6.0	6.0	
Lead/Lag												
Lead-Lag Optimize?												
Vehicle Extension (s)	3.0	3.0		3.0	3.0		3.0	3.0	3.0	3.0	3.0	
Minimum Gap (s)	3.0	3.0		3.0	3.0		3.0	3.0	3.0	3.0	3.0	
Time Before Reduce (s)	0.0	0.0		0.0	0.0		0.0	0.0	0.0	0.0	0.0	
Time To Reduce (s)	0.0	0.0		0.0	0.0		0.0	0.0	0.0	0.0	0.0	
Recall Mode	None	None		None	None		C-Max	C-Max	C-Max	C-Max	C-Max	
Walk Time (s)	7.0	7.0		7.0	7.0		7.0	7.0	7.0	7.0	7.0	
Flash Dont Walk (s)	24.0	24.0		24.0	24.0		24.0	24.0	24.0	24.0	24.0	
Pedestrian Calls (#/hr)	0	0		0	0		0	0	0	0	0	
v/c Ratio	0.33	0.38		0.72	0.27		0.39	0.35	0.08	0.26	0.42	
Control Delay	26.5	27.1		41.8	24.9		9.4	6.2	6.0	9.9	8.7	
Queue Delay	0.0	0.0		0.0	0.0		0.0	0.0	0.0	0.0	0.0	

Lane Group	EBL	EBT	EBR	WBL	WBT	WBR	NBL	NBT	NBR	SBL	SBT	SBR
Total Delay	26.5	27.1		41.8	24.9		9.4	6.2	6.0	9.9	8.7	
Queue Length 50th (ft)	36	52		84	36		22	67	0	20	102	
Queue Length 95th (ft)	70	92		143	69		m36	m92	m22	53	164	
Internal Link Dist (ft)		447			500			2245			611	
Turn Bay Length (ft)	100						340		225	390		
Base Capacity (vph)	363	443		351	444		330	2182	976	397	2128	
Starvation Cap Reductn	0	0		0	0		0	0	0	0	0	
Spillback Cap Reductn	0	0		0	0		0	0	0	0	0	
Storage Cap Reductn	0	0		0	0		0	0	0	0	0	
Reduced v/c Ratio	0.25	0.30		0.56	0.21		0.39	0.35	0.08	0.26	0.42	

Intersection Summary

Area Type: Other
Cycle Length: 75
Actuated Cycle Length: 75
Offset: 30 (40%), Referenced to phase 2:NBTL and 6:SBTL, Start of Green
Natural Cycle: 45
Control Type: Actuated-Coordinated
Description: Proposed Signal. Assume ped PB, coordination, signal will go out of coord w/ped calls.Ped FDW reduced for HCM 2010 output.
m Volume for 95th percentile queue is metered by upstream signal.

Splits and Phases: 100: STH 83/Rochester Street & Black Bear Boulvard

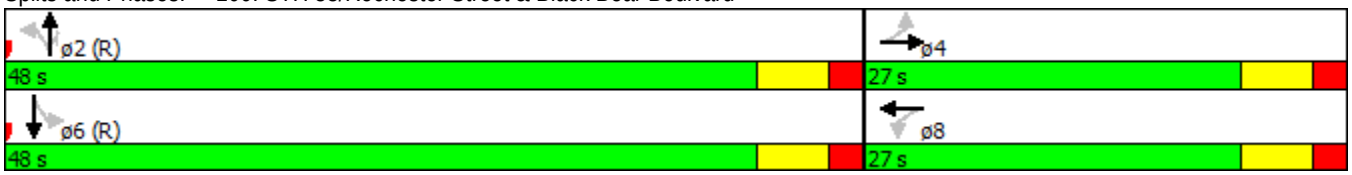

Movement	EBL	EBT	EBR	WBL	WBT	WBR	NBL	NBT	NBR	SBL	SBT	SBR
Lane Configurations												
Volume (veh/h)	85	1	120	180	1	85	120	695	145	95	745	85
Number	7	4	14	3	8	18	5	2	12	1	6	16
Initial Q (Qb), veh	0	0	0	0	0	0	0	0	0	0	0	0
Ped-Bike Adj(A_pbT)	1.00		1.00	1.00		1.00	1.00		1.00	1.00		1.00
Parking Bus, Adj	1.00	1.00	1.00	1.00	1.00	1.00	1.00	1.00	1.00	1.00	1.00	1.00
Adj Sat Flow, veh/h/ln	1863	1863	1900	1863	1863	1900	1845	1845	1845	1827	1827	1900
Adj Flow Rate, veh/h	92	1	130	196	1	92	130	755	79	103	810	92
Adj No. of Lanes	1	1	0	1	1	0	1	2	1	1	2	0
Peak Hour Factor	0.92	0.92	0.92	0.92	0.92	0.92	0.92	0.92	0.92	0.92	0.92	0.92
Percent Heavy Veh, %	2	2	2	2	2	2	3	3	3	4	4	4
Cap, veh/h	365	3	399	330	4	398	366	2055	919	473	1842	209
Arrive On Green	0.25	0.25	0.25	0.25	0.25	0.25	1.00	1.00	1.00	0.59	0.59	0.59
Sat Flow, veh/h	1298	12	1573	1254	17	1569	609	3505	1568	643	3143	357
Grp Volume(v), veh/h	92	0	131	196	0	93	130	755	79	103	447	455
Grp Sat Flow(s),veh/h/ln	1298	0	1585	1254	0	1586	609	1752	1568	643	1736	1764
Q Serve(g_s), s	4.5	0.0	5.0	11.3	0.0	3.5	6.2	0.0	0.0	5.9	10.8	10.8
Cycle Q Clear(g_c), s	8.0	0.0	5.0	16.3	0.0	3.5	16.9	0.0	0.0	5.9	10.8	10.8
Prop In Lane	1.00		0.99	1.00		0.99	1.00		1.00	1.00		0.20
Lane Grp Cap(c), veh/h	365	0	402	330	0	402	366	2055	919	473	1018	1034
V/C Ratio(X)	0.25	0.00	0.33	0.59	0.00	0.23	0.36	0.37	0.09	0.22	0.44	0.44
Avail Cap(c_a), veh/h	399	0	444	363	0	444	366	2055	919	473	1018	1034
HCM Platoon Ratio	1.00	1.00	1.00	1.00	1.00	1.00	2.00	2.00	2.00	1.00	1.00	1.00
Upstream Filter(I)	1.00	0.00	1.00	1.00	0.00	1.00	0.74	0.74	0.74	1.00	1.00	1.00
Uniform Delay (d), s/veh	25.4	0.0	22.8	29.4	0.0	22.2	2.1	0.0	0.0	7.6	8.6	8.6
Incr Delay (d2), s/veh	0.4	0.0	0.5	2.2	0.0	0.3	2.0	0.4	0.1	1.1	1.4	1.4
Initial Q Delay(d3),s/veh	0.0	0.0	0.0	0.0	0.0	0.0	0.0	0.0	0.0	0.0	0.0	0.0
%ile BackOfQ(95%),veh/ln	3.0	0.0	4.0	7.4	0.0	2.8	2.1	0.2	0.1	2.1	9.3	9.4
LnGrp Delay(d),s/veh	25.7	0.0	23.2	31.6	0.0	22.5	4.1	0.4	0.1	8.7	10.0	10.0
LnGrp LOS	C		C	C		C	A	A	A	A	B	B
Approach Vol, veh/h		223			289			964			1005	
Approach Delay, s/veh		24.3			28.7			0.9			9.9	
Approach LOS		C			C			A			A	

Timer	1	2	3	4	5	6	7	8
Assigned Phs		2		4		6		8
Phs Duration (G+Y+Rc), s		50.0		25.0		50.0		25.0
Change Period (Y+Rc), s		6.0		6.0		6.0		6.0
Max Green Setting (Gmax), s		42.0		21.0		42.0		21.0
Max Q Clear Time (g_c+I1), s		18.9		10.0		12.8		18.3
Green Ext Time (p_c), s		14.5		1.9		16.9		0.7

Intersection Summary	
HCM 2010 Ctrl Delay	9.9
HCM 2010 LOS	A

Notes

User approved pedestrian interval to be less than phase max green.

Lane Group	EBL	EBT	EBR	WBL	WBT	WBR	NBL	NBT	NBR	SBL	SBT	SBR
Lane Configurations												
Volume (vph)	135	285	330	100	415	250	400	575	80	230	595	220
Ideal Flow (vphpl)	1900	1900	1900	1900	1900	1900	1900	1900	1900	1900	1900	1900
Lane Width (ft)	12	12	12	12	12	12	12	12	12	12	12	12
Grade (%)		0%			0%			0%			0%	
Storage Length (ft)	210		430	215		0	260		55	240		90
Storage Lanes	1		1	1		0	2		1	1		1
Taper Length (ft)	100			100			100			100		
Right Turn on Red			No			No			No			No
Link Speed (mph)		40			40			35			35	
Link Distance (ft)		705			1339			1052			2325	
Travel Time (s)		12.0			22.8			20.5			45.3	
Confl. Peds. (#/hr)												
Confl. Bikes (#/hr)												
Peak Hour Factor	0.93	0.93	0.93	0.93	0.93	0.93	0.93	0.93	0.93	0.93	0.93	0.93
Growth Factor	100%	100%	50%	100%	100%	100%	100%	100%	50%	100%	100%	50%
Heavy Vehicles (%)	3%	3%	3%	1%	1%	1%	2%	2%	2%	3%	3%	3%
Bus Blockages (#/hr)	0	0	0	0	0	0	0	0	0	0	0	0
Parking (#/hr)												
Mid-Block Traffic (%)		0%			0%			0%			0%	
Shared Lane Traffic (%)												
Lane Group Flow (vph)	145	306	177	108	715	0	430	618	43	247	640	118
Turn Type	pm+pt	NA	Perm	pm+pt	NA		Prot	NA	Perm	D.P+P	NA	Perm
Protected Phases	7	4		3	8		1	6		5	2	
Permitted Phases	4		4	8					6	6		2
Detector Phase	7	4	4	3	8		1	6	6	5	2	2
Switch Phase												
Minimum Initial (s)	6.0	8.0	8.0	6.0	8.0		8.0	15.0	15.0	6.0	15.0	15.0
Minimum Split (s)	10.5	14.6	14.6	10.5	14.6		12.5	21.4	21.4	10.5	21.4	21.4
Total Split (s)	10.5	25.0	25.0	10.5	25.0		16.0	26.0	26.0	13.5	23.5	23.5
Total Split (%)	14.0%	33.3%	33.3%	14.0%	33.3%		21.3%	34.7%	34.7%	18.0%	31.3%	31.3%
Maximum Green (s)	6.0	18.4	18.4	6.0	18.4		11.5	19.6	19.6	9.0	17.1	17.1
Yellow Time (s)	3.5	4.0	4.0	3.5	4.0		3.5	3.9	3.9	3.5	3.9	3.9
All-Red Time (s)	1.0	2.6	2.6	1.0	2.6		1.0	2.5	2.5	1.0	2.5	2.5
Lost Time Adjust (s)	0.0	0.0	0.0	0.0	0.0		0.0	0.0	0.0	0.0	0.0	0.0
Total Lost Time (s)	4.5	6.6	6.6	4.5	6.6		4.5	6.4	6.4	4.5	6.4	6.4
Lead/Lag	Lead	Lag	Lag	Lead	Lag		Lead	Lag	Lag	Lead	Lag	Lag
Lead-Lag Optimize?												
Vehicle Extension (s)	1.5	1.5	1.5	1.5	1.5		1.5	4.3	4.3	1.5	3.4	3.4
Minimum Gap (s)	1.5	1.5	1.5	1.5	1.5		1.5	2.0	2.0	1.5	2.0	2.0
Time Before Reduce (s)	20.0	30.0	30.0	20.0	30.0		20.0	19.0	19.0	20.0	20.0	20.0
Time To Reduce (s)	0.0	0.0	0.0	0.0	0.0		0.0	21.0	21.0	0.0	20.0	20.0
Recall Mode	None	None	None	None	None		None	C-Max	C-Max	None	C-Max	C-Max
Walk Time (s)		7.0	7.0		7.0			7.0	7.0		7.0	7.0
Flash Dont Walk (s)		35.0	35.0		37.0			32.0	32.0		37.0	37.0
Pedestrian Calls (#/hr)		0	0		0			0	0		0	0
v/c Ratio	0.60	0.63	0.43	0.29	0.90		0.84	0.63	0.10	0.68	0.76	0.31
Control Delay	27.7	31.9	28.3	16.2	43.5		47.8	27.7	21.9	22.0	28.0	20.5
Queue Delay	0.0	0.0	0.0	0.0	0.0		0.0	0.0	0.0	0.0	0.0	0.0

Lane Group	EBL	EBT	EBR	WBL	WBT	WBR	NBL	NBT	NBR	SBL	SBT	SBR
Total Delay	27.7	31.9	28.3	16.2	43.5		47.8	27.7	21.9	22.0	28.0	20.5
Queue Length 50th (ft)	37	116	56	30	167		101	135	15	60	155	35
Queue Length 95th (ft)	#119	#211	136	60	#261		#170	190	39	#128	#183	m60
Internal Link Dist (ft)		625			1259			972			2245	
Turn Bay Length (ft)	210		430	215			260		55	240		90
Base Capacity (vph)	243	488	415	374	827		526	978	437	375	847	378
Starvation Cap Reductn	0	0	0	0	0		0	0	0	0	0	0
Spillback Cap Reductn	0	0	0	0	0		0	0	0	0	0	0
Storage Cap Reductn	0	0	0	0	0		0	0	0	0	0	0
Reduced v/c Ratio	0.60	0.63	0.43	0.29	0.86		0.82	0.63	0.10	0.66	0.76	0.31

Intersection Summary

Area Type: Other
Cycle Length: 75
Actuated Cycle Length: 75
Offset: 0 (0%), Referenced to phase 2:SBT and 6:NBSB, Start of Green
Natural Cycle: 75
Control Type: Actuated-Coordinated
Description: PB all app. Min splits reduced for coordination CL. Signal will go out of coord w/ped calls. SB LT FYA.
95th percentile volume exceeds capacity, queue may be longer.
Queue shown is maximum after two cycles.
m Volume for 95th percentile queue is metered by upstream signal.

Splits and Phases: 200: STH 83/Rochester Street & CTH N

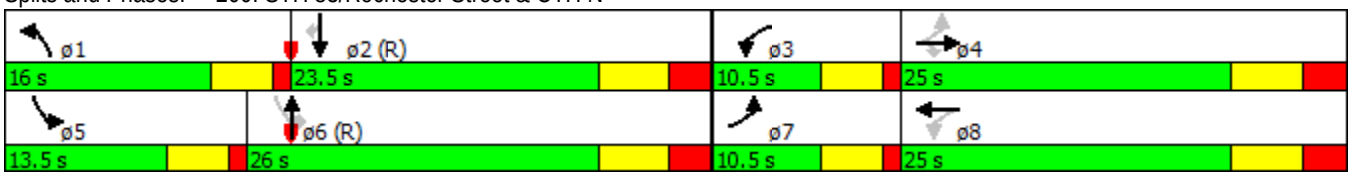

Movement	EBL	EBT	EBR	WBL	WBT	WBR	NBL	NBT	NBR	SBL	SBT	SBR
Lane Configurations												
Volume (veh/h)	135	285	330	100	415	250	400	575	80	230	595	220
Number	7	4	14	3	8	18	1	6	16	5	2	12
Initial Q (Qb), veh	0	0	0	0	0	0	0	0	0	0	0	0
Ped-Bike Adj(A_pbT)	1.00		1.00	1.00		1.00	1.00		1.00	1.00		1.00
Parking Bus, Adj	1.00	1.00	1.00	1.00	1.00	1.00	1.00	1.00	1.00	1.00	1.00	1.00
Adj Sat Flow, veh/h/ln	1845	1845	1845	1881	1881	1900	1863	1863	1863	1845	1845	1845
Adj Flow Rate, veh/h	145	306	177	108	446	269	430	618	43	247	640	118
Adj No. of Lanes	1	1	1	1	2	0	2	2	1	1	2	1
Peak Hour Factor	0.93	0.93	0.93	0.93	0.93	0.93	0.93	0.93	0.93	0.93	0.93	0.93
Percent Heavy Veh, %	3	3	3	1	1	1	2	2	2	3	3	3
Cap, veh/h	261	451	383	310	508	304	512	959	429	396	849	380
Arrive On Green	0.08	0.24	0.24	0.07	0.24	0.24	0.15	0.27	0.27	0.12	0.24	0.24
Sat Flow, veh/h	1757	1845	1568	1792	2152	1289	3442	3539	1583	1757	3505	1568
Grp Volume(v), veh/h	145	306	177	108	370	345	430	618	43	247	640	118
Grp Sat Flow(s),veh/h/ln	1757	1845	1568	1792	1787	1654	1721	1770	1583	1757	1752	1568
Q Serve(g_s), s	4.6	11.3	7.2	3.3	15.0	15.1	9.1	11.6	1.5	7.5	12.7	4.6
Cycle Q Clear(g_c), s	4.6	11.3	7.2	3.3	15.0	15.1	9.1	11.6	1.5	7.5	12.7	4.6
Prop In Lane	1.00		1.00	1.00		0.78	1.00		1.00	1.00		1.00
Lane Grp Cap(c), veh/h	261	451	383	310	421	390	512	959	429	396	849	380
V/C Ratio(X)	0.55	0.68	0.46	0.35	0.88	0.88	0.84	0.64	0.10	0.62	0.75	0.31
Avail Cap(c_a), veh/h	261	453	385	326	438	406	528	959	429	396	849	380
HCM Platoon Ratio	1.00	1.00	1.00	1.00	1.00	1.00	1.00	1.00	1.00	1.00	1.00	1.00
Upstream Filter(I)	1.00	1.00	1.00	1.00	1.00	1.00	1.00	1.00	1.00	0.87	0.87	0.87
Uniform Delay (d), s/veh	21.0	25.7	24.1	20.0	27.6	27.7	31.1	24.2	20.5	17.5	26.3	23.3
Incr Delay (d2), s/veh	1.5	3.3	0.3	0.2	16.7	18.9	10.6	3.3	0.5	2.0	5.4	1.9
Initial Q Delay(d3),s/veh	0.0	0.0	0.0	0.0	0.0	0.0	0.0	0.0	0.0	0.0	0.0	0.0
%ile BackOfQ(95%),veh/ln	4.2	10.2	5.7	3.0	14.4	13.9	8.7	10.2	1.3	6.8	10.8	3.9
LnGrp Delay(d),s/veh	22.5	29.0	24.5	20.2	44.3	46.6	41.7	27.5	21.0	19.5	31.8	25.1
LnGrp LOS	C	C	C	C	D	D	D	C	C	B	C	C
Approach Vol, veh/h		628			823			1091			1005	
Approach Delay, s/veh		26.2			42.1			32.8			28.0	
Approach LOS		C			D			C			C	

Timer	1	2	3	4	5	6	7	8
Assigned Phs	1	2	3	4	5	6	7	8
Phs Duration (G+Y+Rc), s	15.6	24.6	9.9	24.9	13.5	26.7	10.5	24.3
Change Period (Y+Rc), s	4.5	6.4	4.5	6.6	4.5	6.4	4.5	6.6
Max Green Setting (Gmax), s	11.5	17.1	6.0	18.4	9.0	19.6	6.0	18.4
Max Q Clear Time (g_c+I1), s	11.1	14.7	5.3	13.3	9.5	13.6	6.6	17.1
Green Ext Time (p_c), s	0.0	1.9	0.0	1.7	0.0	4.5	0.0	0.6

Intersection Summary	
HCM 2010 Ctrl Delay	32.4
HCM 2010 LOS	C

Notes

User approved pedestrian interval to be less than phase max green.

Lane Group	EBL	EBT	EBR	WBL	WBT	WBR	NBL	NBT	NBR	SBL	SBT	SBR
Lane Configurations												
Volume (vph)	20	590	10	15	935	85	35	1	90	70	1	10
Ideal Flow (vphpl)	1900	1900	1900	1900	1900	1900	1900	1900	1900	1900	1900	1900
Lane Width (ft)	12	12	12	12	12	12	12	12	12	12	12	12
Grade (%)		0%			0%			0%			0%	
Storage Length (ft)	200		0	100		0	0		100	0		0
Storage Lanes	1		0	1		0	0		1	0		0
Taper Length (ft)	100			100			100			100		
Right Turn on Red			No			No			No			No
Link Speed (mph)		40			40			25			25	
Link Distance (ft)		1050			1554			303			468	
Travel Time (s)		17.9			26.5			8.3			12.8	
Confl. Peds. (#/hr)												
Confl. Bikes (#/hr)												
Peak Hour Factor	0.91	0.91	0.91	0.91	0.91	0.91	0.91	0.91	0.91	0.91	0.91	0.91
Growth Factor	100%	100%	100%	100%	100%	100%	100%	100%	50%	100%	100%	100%
Heavy Vehicles (%)	3%	3%	3%	1%	1%	1%	1%	1%	1%	5%	5%	5%
Bus Blockages (#/hr)	0	0	0	0	0	0	0	0	0	0	0	0
Parking (#/hr)												
Mid-Block Traffic (%)		0%			0%			0%			0%	
Shared Lane Traffic (%)												
Lane Group Flow (vph)	22	659	0	16	1120	0	0	39	49	0	89	0
Turn Type	Perm	NA		pm+pt	NA		Perm	NA	Perm	Perm	NA	
Protected Phases		6		5	2			8			4	
Permitted Phases	6			2			8		8	4		
Detector Phase	6	6		5	2		8	8	8	4	4	
Switch Phase												
Minimum Initial (s)	15.0	15.0		6.0	7.0		6.0	6.0	6.0	6.0	6.0	
Minimum Split (s)	25.7	25.7		11.7	25.7		24.0	24.0	24.0	24.0	24.0	
Total Split (s)	39.3	39.3		11.7	51.0		24.0	24.0	24.0	24.0	24.0	
Total Split (%)	52.4%	52.4%		15.6%	68.0%		32.0%	32.0%	32.0%	32.0%	32.0%	
Maximum Green (s)	33.6	33.6		6.0	45.3		20.0	20.0	20.0	20.0	20.0	
Yellow Time (s)	4.5	4.5		4.5	4.5		3.0	3.0	3.0	3.0	3.0	
All-Red Time (s)	1.2	1.2		1.2	1.2		1.0	1.0	1.0	1.0	1.0	
Lost Time Adjust (s)	0.0	0.0		0.0	0.0			0.0	0.0		0.0	
Total Lost Time (s)	5.7	5.7		5.7	5.7			4.0	4.0		4.0	
Lead/Lag	Lag	Lag		Lead								
Lead-Lag Optimize?												
Vehicle Extension (s)	5.5	5.5		4.5	5.5		3.0	3.0	3.0	3.0	3.0	
Minimum Gap (s)	2.0	2.0		0.2	2.0		1.5	1.5	1.5	1.5	1.5	
Time Before Reduce (s)	0.0	0.0		0.0	0.0		0.0	0.0	0.0	0.0	0.0	
Time To Reduce (s)	0.0	0.0		0.0	0.0		0.0	0.0	0.0	0.0	0.0	
Recall Mode	C-Max	C-Max		None	C-Max		None	None	None	None	None	
Walk Time (s)	6.0	6.0			6.0		6.0	6.0	6.0	6.0	6.0	
Flash Dont Walk (s)	14.0	14.0			14.0		14.0	14.0	14.0	14.0	14.0	
Pedestrian Calls (#/hr)	0	0			0		0	0	0	0	0	
v/c Ratio	0.09	0.48		0.03	0.78			0.20	0.22		0.50	
Control Delay	7.9	8.3		0.9	8.3			29.5	29.7		38.8	
Queue Delay	0.0	0.0		0.0	0.0			0.0	0.0		0.0	

Lane Group	EBL	EBT	EBR	WBL	WBT	WBR	NBL	NBT	NBR	SBL	SBT	SBR
Total Delay	7.9	8.3		0.9	8.3			29.5	29.7		38.8	
Queue Length 50th (ft)	2	100		0	116			16	21		39	
Queue Length 95th (ft)	18	337		m1	m#709			40	47		77	
Internal Link Dist (ft)		970			1474			223			388	
Turn Bay Length (ft)	200			100					100			
Base Capacity (vph)	232	1367		530	1440			379	426		344	
Starvation Cap Reductn	0	0		0	0			0	0		0	
Spillback Cap Reductn	0	0		0	0			0	0		0	
Storage Cap Reductn	0	0		0	0			0	0		0	
Reduced v/c Ratio	0.09	0.48		0.03	0.78			0.10	0.12		0.26	

Intersection Summary

Area Type: Other
Cycle Length: 75
Actuated Cycle Length: 75
Offset: 14 (19%), Referenced to phase 2:WBTL and 6:EBTL, Start of Green
Natural Cycle: 90
Control Type: Actuated-Coordinated
Description: TOD plans in peak school hours, coord w/ STH83/CTH NN Ped PB. No Xwalks.

95th percentile volume exceeds capacity, queue may be longer.
Queue shown is maximum after two cycles.

m Volume for 95th percentile queue is metered by upstream signal.

Splits and Phases: 300: HS Dwy/Fairwinds Boulevard & CTH N

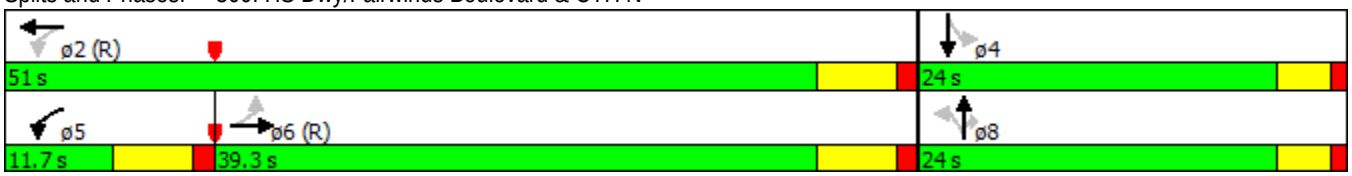

Movement	EBL	EBT	EBR	WBL	WBT	WBR	NBL	NBT	NBR	SBL	SBT	SBR
Lane Configurations												
Volume (veh/h)	20	590	10	15	935	85	35	1	90	70	1	10
Number	1	6	16	5	2	12	3	8	18	7	4	14
Initial Q (Qb), veh	0	0	0	0	0	0	0	0	0	0	0	0
Ped-Bike Adj(A_pbT)	1.00		1.00	1.00		1.00	1.00		1.00	1.00		1.00
Parking Bus, Adj	1.00	1.00	1.00	1.00	1.00	1.00	1.00	1.00	1.00	1.00	1.00	1.00
Adj Sat Flow, veh/h/ln	1845	1845	1900	1881	1881	1900	1900	1881	1881	1900	1810	1900
Adj Flow Rate, veh/h	22	648	11	16	1027	93	38	1	49	77	1	11
Adj No. of Lanes	1	1	0	1	1	0	0	1	1	0	1	0
Peak Hour Factor	0.91	0.91	0.91	0.91	0.91	0.91	0.91	0.91	0.91	0.91	0.91	0.91
Percent Heavy Veh, %	3	3	3	1	1	1	1	1	1	5	5	5
Cap, veh/h	290	1194	20	503	1290	117	270	6	179	195	8	16
Arrive On Green	0.66	0.66	0.66	0.02	0.76	0.76	0.11	0.11	0.11	0.11	0.11	0.11
Sat Flow, veh/h	496	1809	31	1792	1700	154	1564	53	1599	943	70	143
Grp Volume(v), veh/h	22	0	659	16	0	1120	39	0	49	89	0	0
Grp Sat Flow(s),veh/h/ln	496	0	1839	1792	0	1854	1617	0	1599	1156	0	0
Q Serve(g_s), s	2.1	0.0	14.2	0.2	0.0	27.6	0.0	0.0	2.1	4.4	0.0	0.0
Cycle Q Clear(g_c), s	22.3	0.0	14.2	0.2	0.0	27.6	1.6	0.0	2.1	6.0	0.0	0.0
Prop In Lane	1.00		0.02	1.00		0.08	0.97		1.00	0.87		0.12
Lane Grp Cap(c), veh/h	290	0	1214	503	0	1407	276	0	179	219	0	0
V/C Ratio(X)	0.08	0.00	0.54	0.03	0.00	0.80	0.14	0.00	0.27	0.41	0.00	0.00
Avail Cap(c_a), veh/h	290	0	1214	606	0	1407	495	0	426	426	0	0
HCM Platoon Ratio	1.00	1.00	1.00	1.00	1.00	1.00	1.00	1.00	1.00	1.00	1.00	1.00
Upstream Filter(I)	1.00	0.00	1.00	1.00	0.00	1.00	1.00	0.00	1.00	1.00	0.00	0.00
Uniform Delay (d), s/veh	14.6	0.0	6.7	5.0	0.0	5.5	30.3	0.0	30.5	32.7	0.0	0.0
Incr Delay (d2), s/veh	0.5	0.0	1.7	0.0	0.0	4.7	0.2	0.0	0.8	1.2	0.0	0.0
Initial Q Delay(d3),s/veh	0.0	0.0	0.0	0.0	0.0	0.0	0.0	0.0	0.0	0.0	0.0	0.0
%ile BackOfQ(95%),veh/ln	0.6	0.0	12.3	0.2	0.0	22.0	1.4	0.0	1.7	3.3	0.0	0.0
LnGrp Delay(d),s/veh	15.1	0.0	8.5	5.0	0.0	10.3	30.5	0.0	31.3	33.9	0.0	0.0
LnGrp LOS	B		A	A		B	C		C	C		
Approach Vol, veh/h		681			1136			88			89	
Approach Delay, s/veh		8.7			10.2			31.0			33.9	
Approach LOS		A			B			C			C	

Timer	1	2	3	4	5	6	7	8
Assigned Phs		2		4	5	6		8
Phs Duration (G+Y+Rc), s		62.6		12.4	7.4	55.2		12.4
Change Period (Y+Rc), s		* 5.7		4.0	* 5.7	* 5.7		4.0
Max Green Setting (Gmax), s		* 45		20.0	* 6	* 34		20.0
Max Q Clear Time (g_c+I1), s		29.6		8.0	2.2	24.3		4.1
Green Ext Time (p_c), s		14.7		0.6	0.0	8.9		0.7

Intersection Summary	
HCM 2010 Ctrl Delay	11.7
HCM 2010 LOS	B

Notes

* HCM 2010 computational engine requires equal clearance times for the phases crossing the barrier.

APPENDIX H

SIGHT DISTANCE CALCULATIONS

ISD CALCULATIONS

Performed by:	TSC - TADI	Date:	12/9/2015
Location:	STH 83 at Black Bear Boulevard		
	Mukwonago, WI		

Mainline Name:	STH 83			
Sidestreet Name:	Black Bear Boulevard			
T-Intersection (1=yes, 0=no):	0			
Design Speed from Left:	40	mph	58.67	fps
Design Speed from Right:	40	mph	58.67	fps
Median Width:	42	feet	3.50	equivalent lanes
Near Side Right:	0	lane or taper		
Near Side Thru:	2	lane(s)		
Far Side Thru:	2	lane(s)		
Far Side Right:	1	lane or taper		

	P	SU	WB	
Design Vehicles:	x	x	x	(place an "X")

CASE B1: Left Turn from Minor Street or Median (driver looking right)

	MINIMUM ISD			*DESIRABLE ISD*		
	P	SU	WB	P	SU	WB
Base Time Gap, sec:	7.5	9.5	11.5	10.0	12.0	13.0
Additional Time Gap, sec:	0.0	0.0	3.2	0.0	0.0	3.2
Total Time Gap, sec:	7.5	9.5	14.7	10.0	12.0	16.2
Case B1 ISD, feet:	440.0	557.3	862.4	586.7	704.0	950.4
Rounded Case B1 ISD, feet:	445	560	865	590	705	955

CASE B2: Right Turn from Minor Street (driver looking left)

	MINIMUM ISD			*DESIRABLE ISD*		
	P	SU	WB	P	SU	WB
Base Time Gap, sec:	6.5	8.5	10.5	8.0	10.0	12.0
Additional Time Gap, sec:	0.0	0.0	0.0	0.0	0.0	0.0
Total Time Gap, sec:	6.5	8.5	10.5	8.0	10.0	12.0
Case B2 ISD, feet:	381.3	498.7	616.0	469.3	586.7	704.0
Rounded Case B2 ISD, feet:	385	500	620	470	590	705

CASE B3: Crossing from Minor Street (driver looking left)

	MINIMUM ISD			*DESIRABLE ISD*		
	P	SU	WB	P	SU	WB
Base Time Gap, sec:	6.5	8.5	10.5	7.0	10.0	13.0
Additional Time Gap, sec:	0.0	0.0	0.0	0.0	0.0	0.0
Total Time Gap, sec:	6.5	8.5	10.5	7.0	10.0	13.0
Case B3 ISD, feet:	381.3	498.7	616.0	410.7	586.7	762.7
Rounded Case B3 ISD, feet:	385	500	620	415	590	765

CASE B3: Crossing from Minor Street or Median (driver looking right)

	MINIMUM ISD			*DESIRABLE ISD*		
	P	SU	WB	P	SU	WB
Base Time Gap, sec:	6.5	8.5	10.5	7.0	10.0	13.0
Additional Time Gap, sec:	0.5	0.7	4.6	0.5	0.7	4.6
Total Time Gap, sec:	7.0	9.2	15.1	7.5	10.7	17.6
Case B3 ISD, feet:	410.7	539.7	885.9	440.0	627.7	1032.5
Rounded Case B3 ISD, feet:	415	540	890	445	630	1035

CASE F: Left from Major to Minor (driver looking to left of access)

	MINIMUM ISD			*DESIRABLE ISD*		
	P	SU	WB	P	SU	WB
Base Time Gap, sec:	5.5	6.5	7.5	8.0	8.0	8.0
Additional Time Gap, sec:	0.5	0.7	0.7	0.5	0.7	0.7
Total Time Gap, sec:	6.0	7.2	8.2	8.5	8.7	8.7
Case F ISD, feet:	352.0	422.4	481.1	498.7	510.4	510.4
Rounded Case F ISD, feet:	355	425	485	500	515	515

CONTROLLING DISTANCES:

	MINIMUM ISD			***DESIRABLE ISD***		
	P	**SU**	**WB**	**P**	**SU**	**WB**
To Left of Access:	**385**	**500**	**620**	**470**	**590**	**765**
To Right of Access:	**440**	**557**	**886**	**587**	**704**	**1033**
Left-Turn from Mainline:	**355**	**425**	**485**	**500**	**515**	**515**

NOTES: A median width of 25' or more necessary for two-stage of 19' P-Vehicle
A median width of 36' or more necessary for two-stage of 30' SU-Vehicle
A median width of 71' or more necessary for two-stage of 65' WB-Vehicle

ISD CALCULATIONS

Performed by: TSC - TADI Date: 12/9/2015
Location: STH 83 at Black Bear Boulevard
Mukwonago, WI

SPECIAL INSTRUCTIONS:

		Minimum	*Desirable*
X	P	445	590
X	SU	560	705
X	WB	890	1035

STH 83 **STH 83**

		Minimum	*Desirable*
X	P	385	470
X	SU	500	590
X	WB	620	765

Black Bear Boulevar

DRIVER

DRIVER

STH 83 **STH 83**

		Minimum	*Desirable*
X	P	355	500
X	SU	425	515
X	WB	485	515

Black Bear Boulevar

APPENDIX I

WARRANT ANALYSIS FOR TRAFFIC SIGNAL CONTROL

I1. STH 83/Black Bear Boulevard ICE Worksheet

Intersection Control Evaluation Worksheet

BUREAU OF TRAFFIC OPERATIONS

Revised: March 31, 2014

NOTE: Attach Items in BLUE as appendices

SPELL CHECK

Prepared By TADI TSC

Date 12/9/2015

Intersection: STH 83/Black Bear Boulevard **Design Project ID:** **Project Description:** Chapman Property TIA - Mukwonago, WI

Factor	Existing Traffic Control TWSC	Alternative 1 Signal
Safety		
Crash diagram trends	From January 2010 to October 2015, there has been only one single-vehicle crash occuring at the STH 83/Black Bear Boulevard intersection. This crash occurred on 4/02/2010 and involved a 71-year old driver hitting a fixed objet in dry weather. Therefore, no crash patterns were found to exist at this intersection.	
Percent and type of crashes expected to be reduced by alternative		
Access near the intersection and side road traffic impacts		
Additional considerations		
Operational Analysis		
Discuss the Warrant Analysis (Attach AWSC/Signal warrants)		Warrants 1 and 2 are met withBase Year 2016 Build traffic volumes. Warrant Study data is located in Appendix I of the TIA.
LOS, delay, v/c ratio and 95th percentile queues for each movement. (Attach traffic count, forecast and analysis inputs/outputs)		

Existing Traffic Control — AM PEAK

AM PEAK	EB			WB			NB			SB		
	TH/LT	-	RT	TH/LT	-	RT	LT	TH	RT	LT	TH	TH/RT
# of Lanes	1	0	1	1	0	1	1	2	1	1	1	1
LOS	F		B	F		B	A	A	A	A	A	A
Delay (s)	58.1		11.8	190.3		12.8	9.52	0	0	9.95	0	0
v/c Ratio	0.58		0.19	1.19		0.19	0.10	0	0	0.13	0	0
Queue (ft)	117		117	337		17	9	0	0	14	0	0
Int. LOS	C											

Existing Traffic Control — PM PEAK

PM PEAK	EB			WB			NB			SB		
	TH/LT	-	RT	TH/LT	-	RT	LT	TH	RT	LT	TH	TH/RT
# of Lanes	1	0	1	1	0	1	1	2	1	1	1	1
LOS	F		B	F		B	B	A	A	A	A	A
Delay (s)	126		13.4	322.4		11.8	10.87	0	0	9.90	0	0
v/c Ratio	0.87		0.24	1.50		0.15	0.18	0	0	0.12	0	0
Queue (ft)	230		230	411		13	16	0	0	12	0	0
Int. LOS	C											

Notes: 2026 Total Traffic Volumes

Alternative 1 — AM PEAK

AM PEAK	EB			WB			NB			SB		
	LT	-	TH/RT	LT	-	TH/RT	LT	TH	RT	LT	TH	TH/RT
# of Lanes	1	0	1	1	0	1	1	2	1	1	1	1
LOS	C		C	D		C	C	C	B	C	B	B
Delay (s)	30.0		25.6	35.5		25.8	27.5	22.1	17.2	22.2	10.6	10.6
v/c Ratio	0.24		0.28	0.61		0.30	0.21	0.37	0.11	0.33	0.34	0.34
Queue (ft)	66		90	147		82	27	141	22	72	155	155
Int. LOS	C											

Alternative 1 — PM PEAK

PM PEAK	EB			WB			NB			SB		
	LT	-	TH/RT	LT	-	TH/RT	LT	TH	RT	LT	TH	TH/RT
# of Lanes	1	0	1	1	0	1	1	2	1	1	1	1
LOS	C		C	C		C	A	A	A	A	B	B
Delay (s)	25.7		23.2	31.6		22.5	4.1	0.4	0.1	8.7	10.0	10.0
v/c Ratio	0.25		0.33	0.59		0.23	0.36	0.37	0.09	0.22	0.44	0.44
Queue (ft)	70		92	143		69	36	92	22	53	164	164
Int. LOS	A											

Notes: 2026 Total Traffic Volumes. Assumes coordination with STH 83/CTH NN signal.

Factor	Existing Traffic Control TWSC	Alternative 1 Signal
Queue impact on adjacent driveways	Free-flow NB & SB traffic on STH 83. WB queues could back up past Kwik Trip driveway to Black Bear Boulevard.	All queues are expected to be within available turn lane storage and not block adjacent driveways or intersections.
Capacity to accommodate diverted freeway traffic for routes parallel to freeway	If freeway traffic is diverted through this intersection, then STH 83 is expected to continue to operate acceptably. Black Bear Boulevard will see increasingly unacceptable delays and queues.	If diverted freeway traffic is diverted through this intersection, the signal timings can be adjusted to provide additional capacity to the mainline movements as needed.
Impacts of railroad crossings within 1000 feet	N/A	N/A
Preliminary Layout of existing and proposed traffic control	See Appendix TIA Exhibit 6-1	See Appendix TIA Exhibit 6-2
Additional considerations (Indicate if roundabout is expected to be a spiral design)		
Right-of-Way Impacts		
Amount of acreage impacted (# of relocations, access restrictions)		
Anticipated right-of-way and real estate costs (Attach cost estimate tables)		
Additional considerations		
Costs		
Discuss estimated costs (Attach itemized cost estimate tables)		
Operations and Maintenance Costs		
Additional considerations		
Practical Feasibility		
Concerns alternative may present	High delays for EB & WB traffic movements. Other development driveway intersections may also see high/unacceptable delays.	Signal creates stops on NB/SB STH 83 that was previously free-flow, management of signal timings/coordination with adjacent signals is needed to keep NB & SB queues minimized.
Major impacts on businesses, parking availability, real estate and utilities	None expected.	None expected.
Frequency of use as an alternate route		
Additional considerations	Traffic signals would create gaps in traffic and therefore better traffic operations for other development driveway intersections to STH 83 that are located between Black Bear Boulevard and CTH NN.	
Pedestrians and Bicycles		
Describe the need for pedestrian and bicycle facilities		

Factor	Existing Traffic Control TWSC	Alternative 1 Signal
Identify nearby pedestrian generators, bike routes, transit stops and if the intersection is on a Safe Route to School (part of existing conditions exhibit)		
State if and what facilities are proposed, within, the project limits (part of preliminary layout of proposed alternatives)		
Additional considerations		
OSOW Freight Network		
Identify nearby OSOW generators		
If either intersecting road is on the freight network, is a significant diversion route or near a freight origin or destination discuss the following: • The geometric features and other design considerations to account for the OSOW vehicle path (e.g. grading, medians, islands). • Vertical and horizontal clearance to account for the OSOW vehicle path (e.g. monotubes, signing)		
Additional considerations		
Environmental Impacts		
Type (i.e. historical, archeological, wetlands or hazardous material) and amount of environmental acreage impacts		
Additional considerations		

Factor	Alternative 2 Roundabout	Alternative 3
Safety		
Crash diagram trends		

Factor	Alternative 2 Roundabout	Alternative 3
Percent and type of crashes expected to be reduced by alternative		
Access near the intersection and side road traffic impacts		
Additional considerations	The 55-mph speed limit for SB STH 83 traffic coming around the horizontal curve and approaching the roundabout may present safety issues, although the speed officially transitions to 35-mph about 1,000 feet north of the intersection.	
Operational Analysis		
Discuss the Warrant Analysis (Attach AWSC/Signal warrants)	N/A	

LOS, delay, v/c ratio and 95th percentile queues for each movement. (include traffic count, forecast and analysis inputs/outputs)

AM PEAK	EB			WB			NB			SB		
	-	LT/TH/RT	-	-	LT/TH/RT	-	TH/LT	-	TH/RT	TH/LT	-	TH/RT
# of Lanes	0	1	0	0	1	0	1	0	1	1	0	1
LOS		B			C		A		A	A		A
Delay (s)		10.8			18.8		8.6		9.7	8.4		9.3
v/c Ratio		0.35			0.57		0.46		0.52	0.40		0.45
Queue (ft)		40			90		63		78	48		60
Int. LOS	B											

PM PEAK	EB			WB			NB			SB		
	-	LT/TH/RT	-	-	LT/TH/RT	-	TH/LT	-	TH/RT	TH/LT	-	TH/RT
# of Lanes	0	1	0	0	1	0	1	0	1	1	0	1
LOS		B			B		A		A	A		B
Delay (s)		13.0			13.5		8.5		9.6	9.9		11.2
v/c Ratio		0.41			0.47		0.46		0.52	0.50		0.56
Queue (ft)		50			65		63		78	70		90
Int. LOS	B											

Notes: 2026 Total traffic volumes.

AM PEAK	EB			WB			NB			SB		
	-	-	-	-	-	-	-	-	-	-	-	-
# of Lanes	0	0	0	0	0	0	0	0	0	0	0	0
LOS												
Delay (s)												
v/c Ratio												
Queue (ft)												
Int. LOS												

PM PEAK	EB			WB			NB			SB		
	-	-	-	-	-	-	-	-	-	-	-	-
# of Lanes	0	0	0	0	0	0	0	0	0	0	0	0
LOS												
Delay (s)												
v/c Ratio												
Queue (ft)												
Int. LOS												

Notes:

Queue impact on adjacent driveways	None expected.	
Capacity to accommodate 5-20% of diverted freeway traffic for routes parallel to freeway		
Document railroad crossings within 1000 feet of the intersection.	N/A	
Preliminary Layout of existing and proposed traffic control	See Appendix TIA Exhibit 6-3	See Appendix
Additional considerations (Indicate if roundabout is expected to be a spiral design)	Full 2-lane roundabout with 2-lane NB and SB approaches. One lane EB and WB approaches.	
Right-of-Way Impacts		

Factor	Alternative 2 Roundabout	Alternative 3
Amount of acreage impacted (# of relocations, access restrictions)		
Anticipated right-of-way and real estate costs (Attach cost estimate tables)		
Additional Considerations		
Costs		
Discuss estimated costs (Attach itemized cost estimate tables)		
Operations and Maintenance Costs		
Additional considerations		
Practical Feasibility		
Concerns alternative may present		
Major impacts on businesses, parking availability, real estate and utilities	None expected.	
Frequency of use as an alternate route		
Additional considerations	The intersection was recently reconstructed with a wide median and slotted left-turn lanes on STH 83. Reconstructing the intersection for roundabout control would be a costly alternative compared to installing traffic signals at this location.	
Pedestrians and Bicycles		
Describe the need for pedestrian and bicycle facilities		
Identify nearby pedestrian generators, bike routes, transit stops and if the intersection is on a Safe Route to School (part of existing conditions exhibit)		
State if and what facilities are proposed, within, the project limits (part of preliminary layout of proposed alternatives)		
Additional considerations		
OSOW Vehicle Routes		
Identify nearby OSOW generators		

Factor	Alternative 2 Roundabout	Alternative 3
If either intersecting road is on the freight network, is a significant diversion route or near a freight origin or destination discuss the following: • The geometric features and other design considerations to account for the OSOW vehicle path (e.g. grading, medians, islands). • Vertical and horizontal clearance to account for the OSOW vehicle path (e.g. monotubes, signing)		
Additional considerations		
Environmental Impacts		
Type (i.e. historical, archeological, wetlands or hazardous material) and amount of environmental acreage impacts		
Additional considerations		

Recommendation

Based on the evaluation of safety, operational analysis, and practical feasibility, it is recommended that WisDOT consider traffic signal control at the STH 83/Black Bear Boulevard intersection. The existing stop sign control is not expected to provide acceptable traffic operations as traffic volumes increase at the intersection. Roundabout control is an acceptable alternative to traffic signals, but may create safety issues for high speed, southbound STH 83 traffic approaching the roundabout from an upstream horizontal curve on STH 83.

APPENDIX I

WARRANT ANALYSIS FOR TRAFFIC SIGNAL CONTROL

I2. STH 83/Black Bear Boulevard Signal Warrant Analysis Worksheets

Wisconsin Department of Transportation Traffic Signal Warrant Summary Worksheet

70%

The Worksheet(s) attached are provided as an attachment to the Engineering Investigation Study for:

Intersection: STH 83 & Black Bear Boulevard
County: Waukesha
Village: Mukwonago

Major Street: STH 83
Critical Approach Speed: 35 mph
Lanes: 2 or more lanes

Minor Street: Black Bear Boulevard
Critical Approach Speed: 25 mph
Lanes: 1 lane

% Right Turns Included
From North (SB) 100%
From East (WB) 0%
From South (NB) 0%
From West (EB) 100%

In built-up area of isolated community of < 10,000 population? Yes
Total number of approaches at intersection? 3
If it is a "T" intersection, inflate minor threshold to 150%? Yes
Manually set volume level?

Analysis based on PROJECTED volume data.

Forecast Year	Within 5 Years of Construction?	Time (HH:MM)			
		From	AM / PM	To	AM / PM
2016 + Simon Property Development	Yes	6:00	AM	7:00	PM

Warrant Evaluation Summary	Warrant Met:
Warrant 1: Eight - Hour Vehicular Volume	**Yes**
Condition A: Minimum Vehicular Volume	No
Condition B: Interruption of Continuous Traffic	Yes
Condition C: Combination: 80% of A and B	Yes
Warrant 2: Four-Hour Volume	**Yes**
Warrant 3: Peak Hour Volume	**N/A**
Warrant 4: Pedestrian Volume	**N/A**
Criterion A: Four-Hour	
Criterion B: Peak-Hour	
Warrant 5: School Crossing	**N/A**
Warrant 6: Coordinated Signal System	**N/A**
Warrant 7: Crash Experience	**N/A**
Warrant 8: Roadway Network	**N/A**
Warrant 9: Intersection Near a Grade Crossing	**N/A**

Warrant Analysis Conducted By:

Name: Tammi Czewski
Agency: TADI
Date: 11/11/2015

Warrant 1: Eight - Hour Vehicular Volume 70%

Warrant Evaluated? Yes **Warrant Satisfied? Yes** **Manually Set To:**

Condition A : Min. Veh. Volume		
Volume Level	70%	56%
Major Rd. Req	420	336
Minor Rd. Req	157.5	126
Number of Hours	1	8

Satisfied? No

Condition B: Interruption of Continuous Traffic		
Volume Level	70%	56%
Major Rd. Req	630	504
Minor Rd. Req	79.5	63
Number of Hours	13	13

Satisfied? Yes

Condition C: Combination of A & B at 56%

Satisfied? Yes

6:00 AM Enter Start Time (Military Time) (HH:MM)

Time Period	**From**	**To**	**Major Road: Both App. (VPH)**	**Minor Road: High App. (VPH)**	**Total**
1	6:00	7:00	738	109	847
2	7:00	8:00	1003	125	1128
3	8:00	9:00	785	132	917
4	9:00	10:00	656	105	761
5	10:00	11:00	709	96	805
6	11:00	12:00	724	141	865
7	12:00	13:00	857	182	1039
8	13:00	14:00	783	135	918
9	14:00	15:00	803	141	944
10	15:00	16:00	1025	138	1163
11	16:00	17:00	1120	134	1254
12	17:00	18:00	1254	146	1400
13	18:00	19:00	1008	109	1117
14	19:00	20:00	0	0	0
15	20:00	21:00	0	0	0
16	21:00	22:00	0	0	0

Warrant 2: Four-Hour Volume 70%

Warrant Evaluated? Yes
Warrant Satisfied? Yes
Manually Set To:

Hour Start	17:00	16:00	15:00	7:00
Major Road Vol.	1254	1120	1025	1003
Minor Road Vol.	146	134	138	125

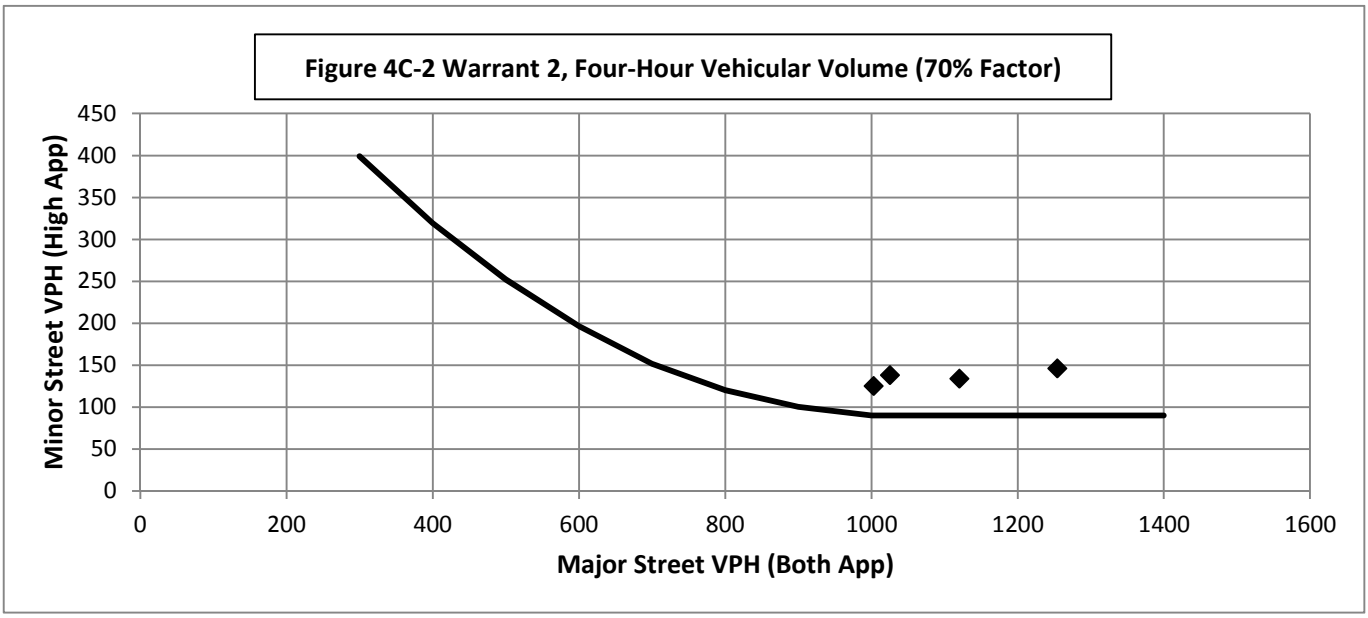

Warrant 3: Peak Hour Volume 70%

Warrant Evaluated? No **Warrant Satisfied? N/A** **Manually Set To:**

Condition justifying use of warrant:

Criteria		Met?
Delay on Minor Approach	4	
Volume on Minor Approach	100	
Total Entering Volume (veh/h)	650	

Manually Set Peak Hour?

Peak Hour	Major Road Vol. (Both App.)	Minor Road Vol. (High App.)
17:00	1254	146

Figure 4C-4 Warrant 3, Peak Hour (70% Factor)

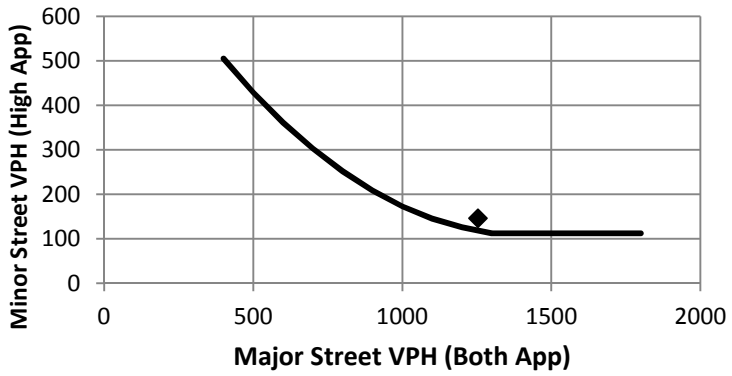

Warrant 4: Pedestrian Volume 70%

Warrant Evaluated? No **Warrant Satisfied? N/A** **Manually Set To:**

Criterion A: Four Hour

Hour (Start)	Pedestrian Volume	Major Road Vol.
		0
		0
		0
		0

Manually Set Major Rd Vol?

Avg. walk speed less than 3.5 ft/s?

Criterion A Satisfied?

Figure 4C-6 Warrant 4, Pedestrian Four-Hour Volume (70% Factor)

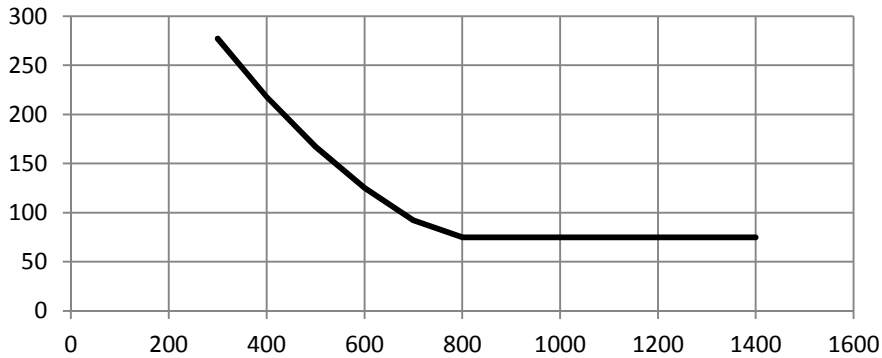

Criterion B: Peak Hour

Peak Hour	Pedestrian Vol.	Major Road Vol.
0:00	0	0

Criterion B Satisfied?

Figure 4C-8 Warrant 4, Pedestrian Peak Hour (70% Factor)

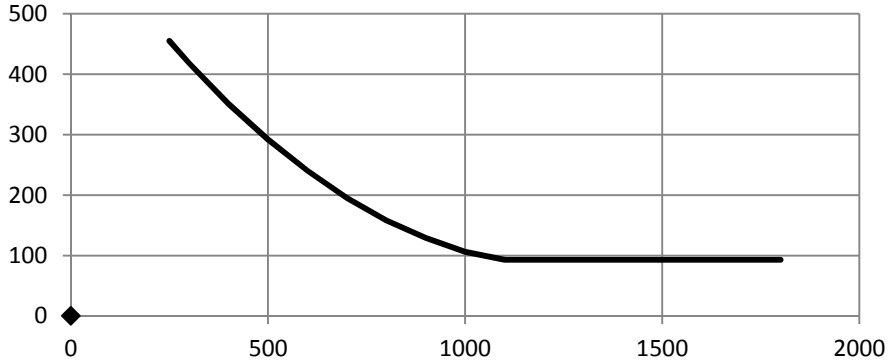

Warrant 5: School Crossing 70%

Warrant Evaluated? No **Warrant Satisfied? N/A** **Manually Set To:**

	Criteria	Fulfilled?
1	There are a MINIMUM of 20 school children during the highest crossing hour.	
2	There are fewer adequate gaps in the major road traffic stream during the period when the school children are using the crossing than the number of minutes in the same period.	
3	The nearest traffic signal along the major road is located more than 300 ft away. Or, the nearest traffic signal is within 300 ft but the proposed traffic signal will not restrict the progressive movement of traffic.	

Warrant 6: Coordinated Signal System 70%

Warrant Evaluated? No **Warrant Satisfied? N/A** **Manually Set To:**

	Criteria	Fulfilled?
1	Signal spacing > 1000 ft	
2	On a one-way road or a road that has traffic predominantly in one direction, the adjacent signals are so far apart that they do not provide the necessary degree of vehicle platooning.	
3	On a two-way road, adjacent signals do not provide the necessary degree of platooning and the proposed and the adjacent signals will collectively provide a progressive operation.	

Warrant 7: Crash Experience 70%

Warrant Evaluated? No **Warrant Satisfied? N/A** **Manually Set To:**

	Criteria		Met?	Fulfilled?
1	Adequate trial of other remedial measures has failed to reduce crash frequency.			
	Measures Tried:			
2	Five or more reported crashes, of types susceptible to correction by signal, have occurred within a 12 month period.	# of crashes per 12 months		
3	Warrant 1, Condition A (80%)		Yes	Yes
	Warrant 1, Condition B (80%)		Yes	
	Warrant 4, Criterion A (80%)		No	
	Warrant 4, Criterion B (80%)		No	

Warrant 8: Roadway Network 70%

Warrant Evaluated? No **Warrant Satisfied? N/A** **Manually Set To:**

	Criteria			Met?	Fulfilled?
1	Total entering volume of at least 1,000 veh/h during typical weekday peak hour		1400	Yes	No
	Five-year projected volumes that satisfy one or more of Warrants 1, 2, or 3.			No	
2	Total entering vol. of at least 1,000 veh/h for each of any 5 hrs of non-normal business day (Sat. or Sun.)				
	Hour				
	Volume				

	Characteristics of Major Routes - Select yes if all intersecting routes have characteristic	Fulfilled?
1	Part of the road or highway system that serves as the principal roadway network for through traffic flow	
2	Rural or suburban highway outside of, entering, or traversing a city	
3	Appears as a major route on an official plan	

Warrant 9: Intersection Near a Grade Crossing 70%

Warrant Evaluated? No **Warrant Satisfied? N/A** **Manually Set To:**

Adjustment Factors			Manually Set Peak Hour?				
Rail Traffic per Day	% High Occupancy Buses on Minor Road	% Tractor-Trailer Trucks on Minor Road	D	Peak Hour	Major Road Vol.	Minor Road Vol.	Adjusted Minor Vol.
				17:00	1254	146	146

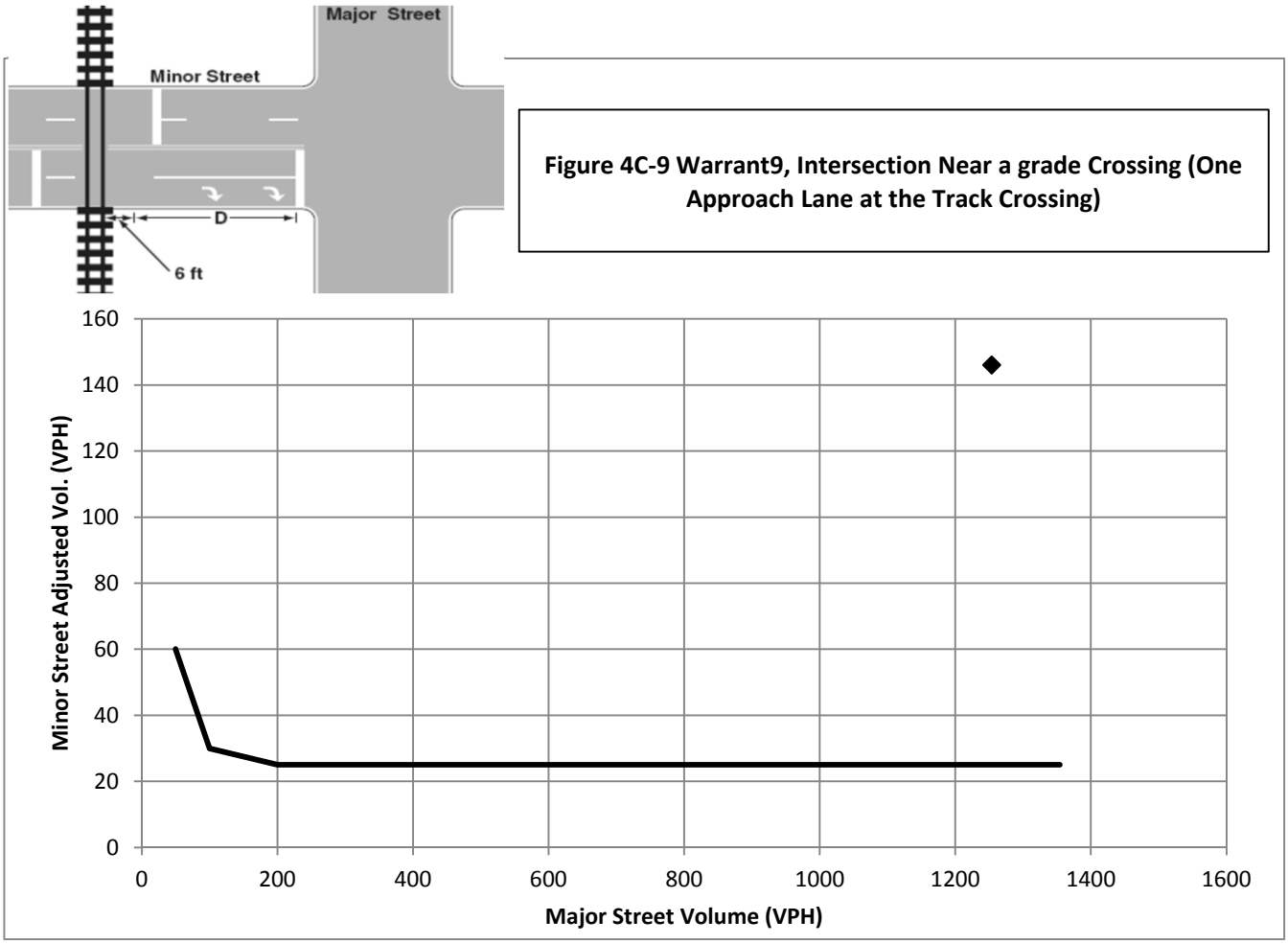

Figure 4C-9 Warrant9, Intersection Near a grade Crossing (One Approach Lane at the Track Crossing)

Conclusions/Comments:

Traffic signals are warranted with 2016 Build traffic volumes, which includes 2015 traffic counts forecasted to the year 2016, plus the full buildout of the Simon property on the east side of STH 83 at Black Bear Boulevard. The Simon property developments include a Kwik-Trip gas station (now open), 20 additional condo/townhouse units, a Quick Lube shop w/attached coffee/donut shop, and an upstairs office for the Quick Lube shop (currently in planning/development). Becasue of the wide median on STH 83 allowing for 2-vehicle storage, the intersection operates acceptably with the 2016 Build traffic volumes. With background growth to 2026, the WB LT fails at LOS E in the AM peak hour. With construction of a west leg for the development of the Chapman property, the WB LT fails in 2016, and both EB and WB fails in 2026. Therefore, it is recommended that signals be installed with buildout of the Chapman property in 2016.

Updated: 6/23/2015

TRAFFIC SIGNAL WARRANT VOLUME CALCULATIONS: STH 83 & Black Bear Boulevard

By: TSC
Date: 11-9-15

2015 Existing Traffic

Start Time	STH 83 from North Right	STH 83 from North Thru	STH 83 from North Left	Black Bear from East Right	Black Bear from East Thru	Black Bear from East Left	STH 83 from South Right	STH 83 from South Thru	STH 83 from South Left	Black Bear from West Right	Black Bear from West Thru	Black Bear from West Left	Intersection Totals	--- IN	--- OUT	% AADT IN	% AADT OUT	Notes
6-7am		313	7	3		0	8	360					691	0	0	0.0%	0.0%	
7-8am		412	8	6		5	18	505					954	0	0	0.0%	0.0%	
8-9am		333	7	7		15	28	376					766	0	0	0.0%	0.0%	
9-10am		317	8	6		19	21	284					655	0	0	0.0%	0.0%	
10-11am		289	8	4		25	25	354					705	0	0	0.0%	0.0%	
11am-12pm		323	10	9		41	23	328					734	0	0	0.0%	0.0%	
12-1pm		344	8	6		24	18	419					819	0	0	0.0%	0.0%	
1-2pm		369	11	13		21	20	334					768	0	0	0.0%	0.0%	
2-3pm		386	4	3		17	16	353					779	0	0	0.0%	0.0%	
3-4pm		505	4	13		27	29	443					1021	0	0	0.0%	0.0%	
4-5pm		533	8	11		36	21	495					1104	0	0	0.0%	0.0%	
5-6pm		607	5	12		30	13	538					1205	0	0	0.0%	0.0%	
6-7pm		400	1	9		13	19	390						0	0	0.0%	0.0%	
														0	0	0.0%	0.0%	
														0	0	0.0%	0.0%	
														0	0	0.0%	0.0%	
IN or OUT																		
PERECENTAGE																		

AADT IN	AADT OUT	
0	0	
0%	0%	<- % Reduction, Sensitivity Test
0	0	

Background Growth to 2016 (WisDOT Forecast: 1.08% NB, SB TH)

GR 1.08

Start Time	STH 83 from North Right	STH 83 from North Thru	STH 83 from North Left	Black Bear from East Right	Black Bear from East Thru	Black Bear from East Left	STH 83 from South Right	STH 83 from South Thru	STH 83 from South Left	Black Bear from West Right	Black Bear from West Thru	Black Bear from West Left	Intersection Totals	--- IN	--- OUT	% AADT IN	% AADT OUT	Notes
6-7am		25						29					54					
7-8am		33						40					73					
8-9am		27						30					57					
9-10am		25						23					48					
10-11am		23						28					51					
11am-12pm		26						26					52					
12-1pm		28						34					62					
1-2pm		30						27					57					
2-3pm		31						28					59					
3-4pm		40						35					75					
4-5pm		43						40					83					
5-6pm		49						43					92					
6-7pm		32						31					63					
IN or OUT																		
PERECENTAGE																		

AADT IN	AADT OUT	
0	0	

Gas Station New Trips (+Quick Lube)

Start Time	STH 83 from North Right	STH 83 from North Thru	STH 83 from North Left	Black Bear from East Right	Black Bear from East Thru	Black Bear from East Left	STH 83 from South Right	STH 83 from South Thru	STH 83 from South Left	Black Bear from West Right	Black Bear from West Thru	Black Bear from West Left	Intersection Totals	--- IN	--- OUT	% AADT IN	% AADT OUT	Notes
6-7am	0	0	11	20	0	46	27	0	0	0	0	0	104	38	65	4.3%	7.3%	<-- From WisDOT Gas Station
7-8am	0	0	21	18	0	42	49	0	0	0	0	0	130	70	60	7.9%	6.8%	<-- From WisDOT Gas Station
8-9am	0	0	15	17	0	41	36	0	0	0	0	0	109	51	58	5.8%	6.5%	<-- From WisDOT Gas Station
9-10am	0	0	16	16	0	37	37	0	0	0	0	0	106	53	53	6.0%	6.0%	<-- From WisDOT Gas Station
10-11am	0	0	12	10	0	24	28	0	0	0	0	0	74	40	34	4.5%	3.8%	<-- From WisDOT Gas Station
11am-12pm	0	0	17	13	0	29	41	0	0	0	0	0	100	58	42	6.6%	4.8%	<-- From WisDOT Gas Station
12-1pm	0	0	18	21	0	50	43	0	0	0	0	0	132	61	71	6.9%	8.0%	<-- From WisDOT Gas Station
1-2pm	0	0	13	17	0	41	29	0	0	0	0	0	100	42	58	4.8%	6.5%	<-- From WisDOT Gas Station
2-3pm	0	0	18	24	0	55	42	0	0	0	0	0	139	60	79	6.8%	8.9%	<-- From WisDOT Gas Station
3-4pm	0	0	21	20	0	48	49	0	0	0	0	0	138	70	68	7.9%	7.7%	<-- From WisDOT Gas Station
4-5pm	0	0	19	15	0	35	45	0	0	0	0	0	114	64	50	7.2%	5.6%	<-- From WisDOT Gas Station
5-6pm	0	0	19	16	0	37	44	0	0	0	0	0	116	63	53	7.1%	6.0%	<-- From WisDOT Gas Station
6-7pm	0	0	20	16	0	36	46	0	0	0	0	0	118	66	52	7.5%	5.9%	<-- From WisDOT Gas Station
IN or OUT			IN	OUT		OUT	IN											
PERECENTAGE			30.0%	30.0%		70.0%	70.0%											

Note: Quick Lube trips were added here since (1) no WisDOT distribution for this land use, and (2) low trip generation not expected to impact outcome of warrant study.

AADT IN	AADT OUT	
885	885	
0%	0%	<- % Reduction, Sensitivity Test
885	885	

Residential New Trips

Start Time	STH 83 from North Right	STH 83 from North Thru	STH 83 from North Left	Black Bear from East Right	Black Bear from East Thru	Black Bear from East Left	STH 83 from South Right	STH 83 from South Thru	STH 83 from South Left	Black Bear from West Right	Black Bear from West Thru	Black Bear from West Left	Intersection Totals	--- IN	--- OUT	% AADT IN	% AADT OUT	Notes
6-7am	0	0	0	2	0	4	1	0	0	0	0	0	7	1	5	1.9%	7.7%	<-- From WisDOT Residential
7-8am	0	0	0	2	0	5	1	0	0	0	0	0	8	1	7	1.5%	12.2%	<-- From WisDOT Residential
8-9am	0	0	1	2	0	4	1	0	0	0	0	0	8	2	5	2.9%	7.7%	<-- From WisDOT Residential
9-10am	0	0	1	1	0	2	1	0	0	0	0	0	5	2	3	3.7%	5.1%	<-- From WisDOT Residential
10-11am	0	0	1	1	0	2	2	0	0	0	0	0	6	3	3	4.3%	5.8%	<-- From WisDOT Residential
11am-12pm	0	0	1	1	0	2	3	0	0	0	0	0	7	4	3	7.0%	5.2%	<-- From WisDOT Residential
12-1pm	0	0	1	1	0	3	3	0	0	0	0	0	8	4	4	7.1%	6.1%	<-- From WisDOT Residential
1-2pm	0	0	1	1	0	2	3	0	0	0	0	0	7	4	3	5.9%	4.7%	<-- From WisDOT Residential
2-3pm	0	0	2	1	0	3	4	0	0	0	0	0	10	5	4	8.0%	6.9%	<-- From WisDOT Residential
3-4pm	0	0	2	1	0	2	4	0	0	0	0	0	9	6	3	10.2%	5.8%	<-- From WisDOT Residential
4-5pm	0	0	2	1	0	3	6	0	0	0	0	0	12	8	4	13.8%	6.7%	<-- From WisDOT Residential
5-6pm	0	0	2	1	0	3	6	0	0	0	0	0	12	8	4	13.6%	6.8%	<-- From WisDOT Residential
6-7pm	0	0	2	1	0	2	4	0	0	0	0	0	9	5	3	8.0%	5.0%	<-- Estimated by TADI
IN or OUT			IN	OUT		OUT	IN											
PERECENTAGE			30.0%	30.0%		70.0%	70.0%											

AADT IN	AADT OUT	
60	60	
0%	0%	<- % Reduction, Sensitivity Test
60	60	

By: TSC
Date: 11-9-15

Coffee/Donut Shop New Trips

Start Time	STH 83 from North Right	STH 83 from North Thru	STH 83 from North Left	Black Bear from East Right	Black Bear from East Thru	Black Bear from East Left	STH 83 from South Right	STH 83 from South Thru	STH 83 from South Left	Black Bear from West Right	Black Bear from West Thru	Black Bear from West Left	Intersection Totals	--- IN	--- OUT	AADT IN	AADT OUT	% AADT IN	% AADT OUT	Notes
																730	730			
																0%	0%			<- % Reduction, Sensitivity Test
																730	730			
6-7am	0	0	8	8	0	19	19	0	0	0	0	0	54	27	27	3.7%	3.7%	<-- From WisDOT Restaurants
7-8am	0	0	15	15	0	35	35	0	0	0	0	0	100	50	50	6.9%	6.9%	<-- From WisDOT Restaurants
8-9am	0	0	15	15	0	35	35	0	0	0	0	0	100	50	50	6.9%	6.9%	<-- From WisDOT Restaurants
9-10am	0	0	7	7	0	15	15	0	0	0	0	0	44	22	22	3.0%	3.0%	<-- From WisDOT Restaurants
10-11am	0	0	10	10	0	23	23	0	0	0	0	0	66	33	33	4.5%	4.5%	<-- From WisDOT Restaurants
11am-12pm	0	0	17	17	0	40	40	0	0	0	0	0	114	57	57	7.7%	7.7%	<-- From WisDOT Restaurants
12-1pm	0	0	25	25	0	58	58	0	0	0	0	0	166	83	83	11.4%	11.4%	<-- From WisDOT Restaurants
1-2pm	0	0	14	14	0	34	34	0	0	0	0	0	96	48	48	6.6%	6.6%	<-- From WisDOT Restaurants
2-3pm	0	0	7	7	0	17	17	0	0	0	0	0	48	24	24	3.3%	3.3%	<-- From WisDOT Restaurants
3-4pm	0	0	7	7	0	17	17	0	0	0	0	0	48	24	24	3.3%	3.3%	<-- From WisDOT Restaurants
4-5pm	0	0	11	11	0	27	27	0	0	0	0	0	76	38	38	5.2%	5.2%	<-- From WisDOT Restaurants
5-6pm	0	0	17	17	0	41	41	0	0	0	0	0	116	58	58	8.0%	8.0%	<-- From WisDOT Restaurants
6-7pm	0	0	11	11	0	25	25	0	0	0	0	0	72	35	35	5.0%	5.0%	<-- Estimated by TADI
IN or OUT			IN	OUT		OUT	IN													
PERECENTAGE			30.0%	30.0%		70.0%	70.0%													

No Coffee/Donut shop distribution, which is expected to have higher distribution of trips in AM peak hour, not other peak hours. This distribution is conservatively low in AM.

Office New Trips

Start Time	STH 83 from North Right	STH 83 from North Thru	STH 83 from North Left	Black Bear from East Right	Black Bear from East Thru	Black Bear from East Left	STH 83 from South Right	STH 83 from South Thru	STH 83 from South Left	Black Bear from West Right	Black Bear from West Thru	Black Bear from West Left	Intersection Totals	--- IN	--- OUT	AADT IN	AADT OUT	% AADT IN	% AADT OUT	Notes
																15	15			
																0%	0%			<- % Reduction, Sensitivity Test
																15	15			
6-7am	0	0	1	0	0	0	1	0	0	0	0	0	2	2	0	13.4%	1.7%	<-- From WisDOT General Office
7-8am	0	0	1	0	0	0	2	0	0	0	0	0	3	3	0	20.2%	1.9%	<-- From WisDOT General Office
8-9am	0	0	1	0	0	0	2	0	0	0	0	0	3	3	0	19.5%	1.3%	<-- From WisDOT General Office
9-10am	0	0	0	0	0	0	1	0	0	0	0	0	1	1	0	7.9%	1.6%	<-- From WisDOT General Office
10-11am	0	0	0	0	0	0	0	0	0	0	0	0	0	0	0	2.6%	1.6%	<-- From WisDOT General Office
11am-12pm	0	0	0	0	0	1	0	0	0	0	0	0	1	0	1	2.8%	4.0%	<-- From WisDOT General Office
12-1pm	0	0	0	0	0	1	0	0	0	0	0	0	1	0	1	2.9%	3.9%	<-- From WisDOT General Office
1-2pm	0	0	0	0	0	0	0	0	0	0	0	0	0	0	0	3.0%	3.0%	<-- From WisDOT General Office
2-3pm	0	0	0	0	0	1	0	0	0	0	0	0	1	0	1	2.0%	6.6%	<-- From WisDOT General Office
3-4pm	0	0	0	1	0	2	0	0	0	0	0	0	3	0	3	2.2%	17.8%	<-- From WisDOT General Office
4-5pm	0	0	0	1	0	2	0	0	0	0	0	0	3	0	3	1.6%	22.6%	<-- From WisDOT General Office
5-6pm	0	0	0	1	0	1	0	0	0	0	0	0	2	0	2	1.4%	13.2%	<-- From WisDOT General Office
6-7pm	0	0	0	0	0	1	0	0	0	0	0	0	1	0	1	0.5%	8.0%	<-- Estimated by TADI
IN or OUT			IN	OUT		OUT	IN													
PERECENTAGE			30.0%	30.0%		70.0%	70.0%													

Gas Station Pass-by

Start Time	STH 83 from North Right	STH 83 from North Thru	STH 83 from North Left	Black Bear from East Right	Black Bear from East Thru	Black Bear from East Left	STH 83 from South Right	STH 83 from South Thru	STH 83 from South Left	Black Bear from West Right	Black Bear from West Thru	Black Bear from West Left	Intersection Totals	--- IN	--- OUT	AADT IN	AADT OUT	% AADT IN	% AADT OUT	Notes
																1025	1025			
																0%	0%			<- % Reduction, Sensitivity Test
																1025	1025			
6-7am	0	-22	22	38	0	38	22	-22	0	0	0	0	76	44	75	4.3%	7.3%	<-- From WisDOT Gas Station
7-8am	0	-41	41	35	0	35	41	-41	0	0	0	0	70	81	70	7.9%	6.8%	<-- From WisDOT Gas Station
8-9am	0	-30	30	34	0	34	30	-30	0	0	0	0	68	59	67	5.8%	6.5%	<-- From WisDOT Gas Station
9-10am	0	-31	31	31	0	31	31	-31	0	0	0	0	62	62	62	6.0%	6.0%	<-- From WisDOT Gas Station
10-11am	0	-23	23	20	0	20	23	-23	0	0	0	0	40	46	39	4.5%	3.8%	<-- From WisDOT Gas Station
11am-12pm	0	-34	34	25	0	25	34	-34	0	0	0	0	50	68	49	6.6%	4.8%	<-- From WisDOT Gas Station
12-1pm	0	-36	36	41	0	41	36	-36	0	0	0	0	82	71	82	6.9%	8.0%	<-- From WisDOT Gas Station
1-2pm	0	-25	25	34	0	34	25	-25	0	0	0	0	68	49	67	4.8%	6.5%	<-- From WisDOT Gas Station
2-3pm	0	-35	35	46	0	46	35	-35	0	0	0	0	92	70	91	6.8%	8.9%	<-- From WisDOT Gas Station
3-4pm	0	-41	41	40	0	40	41	-41	0	0	0	0	80	81	79	7.9%	7.7%	<-- From WisDOT Gas Station
4-5pm	0	-37	37	29	0	29	37	-37	0	0	0	0	58	74	57	7.2%	5.6%	<-- From WisDOT Gas Station
5-6pm	0	-37	37	31	0	31	37	-37	0	0	0	0	62	73	62	7.1%	6.0%	<-- From WisDOT Gas Station
6-7pm	0	38	38	30	0	30	38	38	0	0	0	0	212	75	60	7.5%	5.9%	<-- From WisDOT Gas Station
IN or OUT		IN	IN	OUT		OUT	IN	IN												
PERECENTAGE		50.0%	50.0%	50.0%		50.0%	50.0%	50.0%												

Coffee/Donut Shop Pass-by

Start Time	STH 83 from North Right	STH 83 from North Thru	STH 83 from North Left	Black Bear from East Right	Black Bear from East Thru	Black Bear from East Left	STH 83 from South Right	STH 83 from South Thru	STH 83 from South Left	Black Bear from West Right	Black Bear from West Thru	Black Bear from West Left	Intersection Totals	--- IN	--- OUT	AADT IN	AADT OUT	% AADT IN	% AADT OUT	Notes
																80	80			
																0%	0%			<- % Reduction, Sensitivity Test
																80	80			
6-7am	0	2	2	2	0	2	2	2	0	0	0	0	12	3	3	3.7%	3.7%	<-- From WisDOT Restaurants
7-8am	0	3	3	3	0	3	3	3	0	0	0	0	18	6	6	6.9%	6.9%	<-- From WisDOT Restaurants
8-9am	0	3	3	3	0	3	3	3	0	0	0	0	18	6	6	6.9%	6.9%	<-- From WisDOT Restaurants
9-10am	0	1	1	1	0	1	1	1	0	0	0	0	6	2	2	3.0%	3.0%	<-- From WisDOT Restaurants
10-11am	0	2	2	2	0	2	2	2	0	0	0	0	12	4	4	4.5%	4.5%	<-- From WisDOT Restaurants
11am-12pm	0	3	3	3	0	3	3	3	0	0	0	0	18	6	6	7.7%	7.7%	<-- From WisDOT Restaurants
12-1pm	0	5	5	5	0	5	5	5	0	0	0	0	30	9	9	11.4%	11.4%	<-- From WisDOT Restaurants
1-2pm	0	3	3	3	0	3	3	3	0	0	0	0	18	5	5	6.6%	6.6%	<-- From WisDOT Restaurants
2-3pm	0	2	2	2	0	2	2	2	0	0	0	0	12	3	3	3.3%	3.3%	<-- From WisDOT Restaurants
3-4pm	0	2	2	2	0	2	2	2	0	0	0	0	12	3	3	3.3%	3.3%	<-- From WisDOT Restaurants
4-5pm	0	2	2	2	0	2	2	2	0	0	0	0	12	4	4	5.2%	5.2%	<-- From WisDOT Restaurants
5-6pm	0	3	3	3	0	3	3	3	0	0	0	0	18	6	6	8.0%	8.0%	<-- From WisDOT Restaurants
6-7pm	0	2	2	2	0	2	2	2	0	0	0	0	12	4	4	5.0%	5.0%	<-- Estimated by TADI
IN or OUT		IN	IN	OUT		OUT	IN	IN												
PERECENTAGE		50.0%	50.0%	50.0%		50.0%	50.0%	50.0%												

No Coffee/Donut shop distribution, which is expected to have higher distribution of trips in AM peak hour, not other peak hours. This distribution is conservatively low in AM.

Hourly Volume Data

One Hour Time Period Start Time		↓ From North (SB)					← From East (WB)					↑ From South (NB)					→ From West (EB)					Total Vehicle Volume
		Right	Thru	Left	U-Tn	Total	Right	Thru	Left	U-Tn	Total	Right	Thru	Left	U-Tn	Total	Right	Thru	Left	U-Tn	Total	
AM	6:00		318	51	0		73		109			80	369		0							1000
	7:00		407	89	0		79		125			149	507		0							1356
	8:00		333	72	1		78		132			135	379		0							1130
	9:00		312	64	1		62		105			107	277		2							930
MD	10:00		291	56	0		47		96			103	361		1							955
	11:00		318	82	0		68		141			144	323		1							1077
	12:00		341	93	0		99		182			163	422		1							1301
	13:00		377	67	0		82		135			114	339		0							1114
PM	14:00		384	68	2		83		141			116	348		1							1143
	15:00		506	77	0		84		138			142	439		3							1389
	16:00		541	79	0		70		134			138	500		0							1462
	17:00		622	83	0		81		146			144	547		2							1625
	18:00		472	74	0		69		109			134	461		1							1320
	19:00																					0
	20:00																					0
	21:00																					0
Totals		0	5222	955	4	6181	975	0	1693	0	2668	1669	5272	0	12	6953	0	0	0	0	0	15802

Note: Copy volume data and paste into cells using paste special -> values

Note: U-Turns are counted as Left Turns in the Volume Totals

Please Select the Major Road: N/S

Major Road Left Turn as Minor Approach?

% Right Turns Included (Default 100%)

From North (SB)	100%
From East (WB)	0%
From South (NB)	0%
From West (EB)	

Major Road Volume Totals: North/South				
Right	Thru	Left	T+LT	Total
0	687	51	738	738
0	914	89	1003	1003
0	712	73	785	785
0	589	67	656	656
0	652	57	709	709
0	641	83	724	724
0	763	94	857	857
0	716	67	783	783
0	732	71	803	803
0	945	80	1025	1025
0	1041	79	1120	1120
0	1169	85	1254	1254
0	933	75	1008	1008
0	0	0	0	0
0	0	0	0	0
0	0	0	0	0
0	10494	971	11465	11465

Minor Road Highest Volume: East/West				
Right	Thru	Left	T+LT	Total
0	0	109	109	109
0	0	125	125	125
0	0	132	132	132
0	0	105	105	105
0	0	96	96	96
0	0	141	141	141
0	0	182	182	182
0	0	135	135	135
0	0	141	141	141
0	0	138	138	138
0	0	134	134	134
0	0	146	146	146
0	0	109	109	109
0	0	0	0	0
0	0	0	0	0
0	0	0	0	0
0	0	1693	1693	1693